THE ELIZA
4790 BROADWAY
NEW YORK, NEW YORK

Remedial Action Work Plan

NYC VCP Project Number TBD
OER Project Number 18TMP1075M

Prepared For:
Ranger Properties
80 8th Avenue, Suite 708
New York, New York 10011
ss@rangerproperties.com

Prepared By:
vEKtor consultants

33 Irving Place, 3rd Floor
New York, New York 10003
(347) 871-0750

APRIL 2019

REMEDIAL ACTION WORK PLAN
TABLE OF CONTENTS

TABLE OF CONTENTS i
LIST OF ACRONYMS iii
CERTIFICATION v
EXECUTIVE SUMMARY 1
COMMUNITY PROTECTION STATEMENT 9
REMEDIAL ACTION WORK PLAN 15
1.0 Project Background 15
1.1 Site Location and Background 15
1.2 Redevelopment Plan 16
1.3 Description of Surrounding Property 16
1.4 Summary of Past Site Uses and Areas of Concern 17
1.6 Summary of Findings of the Phase II ESI 18
2.0 Remedial Action Objectives 20
3.0 Remedial Alternatives Analysis 21
3.1 Threshold Criteria Protection of Public Health and the Environment 23
3.2 Balancing Criteria 24
4.0 Remedial Action 32
4.1 Summary of Preferred Remedial Action 32
4.2 Soil Cleanup Objectives and Soil/ Fill Management 35
4.3 Engineering Controls 38
4.4 Institutional Controls 40
4.5 Site Management Plan 41
4.6 Qualitative Human Health Exposure Assessment 41
5.0 Remedial Action Management 46
5.1 Project Organization and Oversight 46
5.2 Site Security 46
5.3 Work Hours 46
5.4 Construction Health and Safety Plan 46
5.5 Community Air Monitoring Plan 47
5.6 Agency Approvals 49
5.7 Site Preparation 49
5.8 Traffic Control 53
5.9 Demobilization 53
5.10 Reporting and Record Keeping 54
5.11 Complaint Management 55
5.12 Deviations From The Remedial Action Work Plan 55
6.0 Remedial Action Report 56
7.0 Schedule 59

FIGURES

Figure 1: Site Location Map

Figure 2: Site Boundary Map/Surrounding Land Usage

Figure 3: Proposed Redevelopment Plan

Figure 4: Map of End-point Sample Locations

Figure 5: Site Excavation Diagram

Figure 6: Site-wide Cover System Plan and Detail

Figure 7: Vapor Barrier System Plan and Detail

Figure 8: Map showing Truck Route

APPENDICES

Appendix 1: Proposed Development Plans

Appendix 2: Citizen Participation Plan

Appendix 3: Sustainability Statement

Appendix 4: Soil/Materials Management Plan

Appendix 5: Construction Health and Safety Plan

Appendix 6: Manufacturer Specifications for Vapor Barrier

LIST OF ACRONYMS

Acronym	Definition
AOC	Area of Concern
AS/SVE	Air Sparging/Soil Vapor Extraction
BOA	Brownfield Opportunity Area
CAMP	Community Air Monitoring Plan
C&D	Construction and Demolition
CEQR	City Environmental Quality Review
CFR	Code of Federal Regulations
CHASP	Construction Health and Safety Plan
COC	Certificate of Completion
CQAP	Construction Quality Assurance Plan
CSOP	Contractors Site Operation Plan
DCR	Declaration of Covenants and Restrictions
ECs/ICs	Engineering Controls and Institutional Controls
ELAP	Environmental Laboratory Accreditation Program
HASP	Health and Safety Plan
HAZWOPER	Hazardous Waste Operations Emergency Response
IRM	Interim Remedial Measure
MNA	Monitored Natural Attenuation
NOC	Notice of Completion
NYS DEC	New York State Department of Environmental Conservation
NYC DEP	New York City Department of Environmental Protection
NYC DOHMH	New York State Department of Health and Mental Hygiene
NYC OER	New York City Office of Environmental Remediation
NYC VCP	New York City Voluntary Cleanup Program
NYCRR	New York Codes Rules and Regulations
NYS DEC	New York State Department of Environmental Conservation
NYS DEC DER	New York State Department of Environmental Conservation Division of Environmental Remediation

NYS DOH	New York State Department of Health
NYS DOT	New York State Department of Transportation
ORC	Oxygen-Release Compound
OSHA	United States Occupational Health and Safety Administration
PCBs	Polychlorinated Biphenyls
PE	Professional Engineer
PID	Photo Ionization Detector
QEP	Qualified Environmental Professional
QHHEA	Qualitative Human Health Exposure Assessment
RAOs	Remedial Action Objectives
RAR	Remedial Action Report
RAWP	Remedial Action Work Plan or Plan
RCA	Recycled Concrete Aggregate
RD	Remedial Design
RI	Remedial Investigation
RMZ	Residual Management Zone
SCOs	Soil Cleanup Objectives
SCG	Standards, Criteria and Guidance
SMP	Site Management Plan
SPDES	State Pollutant Discharge Elimination System
SSDS	Sub-Slab Depressurization System
SVOC	Semi-Volatile Organic Compound
TAL	Target Analyte List
TCL	Target Compound List
USGS	United States Geological Survey
UST	Underground Storage Tank
VCA	Voluntary Cleanup Agreement
VOC	Volatile Organic Compound

CERTIFICATION

I, Hilmi Ulgur Aydin, am currently a registered professional engineer licensed by the State of New York. I performed professional engineering services and had primary direct responsibility for designing the remedial program for the Eliza (4790 Broadway, New York, NY) site, site number 18TMP1075M. I certify to the following:

- I have reviewed this document and the Stipulation List, to which my signature and seal are affixed.
- Engineering Controls developed for this remedial action were designed by me or a person under my direct supervision and designed to achieve the goals established in this Remedial Action Work Plan for this site.
- The Engineering Controls to be constructed during this remedial action are accurately reflected in the text and drawings of the Remedial Action Work Plan and are of sufficient detail to enable proper construction.
- This Remedial Action Work Plan (RAWP) has a plan for handling, transport and disposal of soil, fill, fluids and other materials removed from the property in accordance with applicable City, State and Federal laws and regulations. Importation of all soil, fill and other material from off-Site will be in accordance with all applicable City, State and Federal laws and requirements. This RAWP has provisions to control nuisances during the remediation and all invasive work, including dust and odor suppression.

Hilmi Ulgur Aydin
Name

PE License Number

Signature

Date

PE Stamp

I, Ezgi Karayel, am a qualified Environmental Professional. I will have primary direct responsibility for implementation of the remedial program for the Eliza (4790 Broadway, New York, NY) site, site number 18TMP1075M. I certify to the following:

- This Remedial Action Work Plan (RAWP) has a plan for handling, transport and disposal of soil, fill, fluids and other materials removed from the property in accordance with applicable City, State and Federal laws and regulations. Importation of all soil, fill and other material from off-Site will be in accordance with all applicable City, State and Federal laws and requirements. This RAWP has provisions to control nuisances during the remediation and all invasive work, including dust and odor suppression.

Ezgi Karayel
QEP Name

QEP Signature

Date

EXECUTIVE SUMMARY

Ranger Properties is working with the NYC Office of Environmental Remediation (OER) in the New York City Voluntary Cleanup Program to investigate and remediate an 18,000-square foot site located at 4790 Broadway in Manhattan, New York. A remedial investigation (RI) (aka Phase II Environmental Site Investigation) was performed to compile and evaluate data and information necessary to develop this Remedial Action Work Plan (RAWP). The remedial action described in this document provides for the protection of public health and the environment consistent with the intended property use, complies with applicable environmental standards, criteria and guidance and conforms with applicable laws and regulations.

Site Location and Background

The Site is located at 4790 Broadway in the Inwood section in New York, New York and is identified as Block 2233, Lot 13 and about 6,000-square feet of the adjoining Lot 20 (partial) on the New York City Tax Map. The Site is 18,000-square feet and is bounded by Broadway to the north beyond which are a one-story commercial building utilized as a medical office and pharmacy, and a six-story mixed residential and commercial use building; a five-story public school to the south and east; and a vacant car wash to the west. Currently, Lot 13 is developed with a two-story public library with a basement and operated by the New York Public Library (NYPL), and Lot 20 is developed with a public school and associated parking lot and operated by the New York City Department of Education (NYCDOE). Westernmost portion of the Lot 20 that is part of the Site is developed with an asphalt-paved parking lot. The site was developed to its existing use since 1952.

Summary of Redevelopment Plan

The proposed future use of the Site will consist of a new 14-story mixed residential and commercial building with a full cellar. The new development will be 100% affordable and will provide 174 residential apartments and community facilities. There will be setbacks on the second and 11th floors. The cellar will be utilized as kitchen, classrooms, mechanical rooms, utility rooms, storage, multi-purpose rooms, office, and bike room. The first floor will be utilized as mail package room, residential and community lobby, and library; the second floor will be utilized as classrooms, office, dining room, and library; the third through thirteenth floors will be

utilized as residential apartment; the fourteenth floor will be utilized as residential apartments, lounge, gym, laundry and rooftop terrace.

In order to construct the new cellar and foundation, the entire Site will be excavated to approximately 12 feet below grade surface (bgs). The new cellar will cover approximately 75% of the Site. Remaining areas will be backfilled and will consist of approximately 3,600 square feet of paved residential rear yard, and 560 square feet of paved community/commercial rear yard. The rear yards will consist of six-inch thick concrete slab over backfilled soil. The existing building will be demolished and existing cellar will be backfilled prior to redevelopment and excavation. Groundwater ranges from 2.44 to 12.95 feet at the Site, therefore dewatering is anticipated for construction of the new building's cellar.

The current zoning designation is C4-4D: commercial (R8A Equivalent) and R7-2: residential. R7 districts are medium-density apartment house districts mapped in much of the Bronx as well as the Upper West Side in Manhattan. R7-2 districts are mapped primarily in upper Manhattan. C4 districts are commercial neighborhoods that are typically mapped within regional commercial centers of New York City. The proposed use is consistent with existing zoning for the property.

Summary of Surrounding Property

The Site is located within primarily mixed residential and commercial use area of New York County, New York. The Site is bounded by Broadway to the north beyond which are a one-story commercial building utilized as a medical office and pharmacy, and a six-story mixed residential and commercial use building; a five-story public school to the south and east; and a vacant car wash to the west.

According to the OER Searchable Property Environmental E-Database (SPEED), there is one sensitive receptor located within 500-foot radius of the Site. JHS 052 Inwood located at 650 Academy Street is adjacent to the east of the Site.

Summary of Past Site Uses and Areas of Concern

Based upon the review of available sanborn maps and other historical documents provided in a Phase I ESA Report prepared by Langan Engineering, Environmental, Surveying and Landscape Architecture, D.P.C. (Langan) in July 2018, Lot 13 was comprised of two

undeveloped tax lots from 1900 to 1913. These two lots were used for storage and parking in the 1935 map, and were merged into a singular Lot 13 by the 1968 map. In the 1968 map, the Inwood Branch Public Library is visible and the map indicates that the structure was built in 1951. The maps indicate that a school has been present on Lot 20 since 1893; however, the portion of Lot 20 that comprises the Site remained undeveloped.

The AOCs identified for this site include:

1. Presence of historic fill to a depth of 2 feet bgs beneath Lot 20 and 1 foot beneath the library cellar on Lot 13.
2. A subsurface anomaly indicative of a UST in the western portion of the cellar on Lot 13.
3. A 2,000-gallon steel AST containing number 2 fuel oil is located in the southern portion of the cellar on Lot 13. The AST and surrounding concrete slab were observed to be in good condition during the assessments.

Summary of Work Performed under the Phase II ESI

Langan performed the following work on June 26 and 27, 2018:

1. A Site inspection to identify AOCs and physical obstructions (i.e. structures, buildings, etc.);
2. Completion of a geophysical survey to identify any anomalies indicative of tanks, and located buried utilities;
3. Installation of six soil borings across the entire project Site, and collection of 13 soil samples for chemical analysis from the soil borings to evaluate soil quality;
4. Installation of three groundwater monitoring wells throughout the Site to establish groundwater flow and collection of four groundwater samples for chemical analysis to evaluate groundwater quality;
5. Installation of one soil vapor probe and three sub-slab vapor points around Site perimeter and collection of four soil vapor samples for chemical analysis.

Summary of Findings of the Phase II ESI

1. Elevation of the property is approximately 21.8 feet.
2. Depth to groundwater ranges from 2.44 to 12.95 feet at the Site.
3. Groundwater flow is towards southeast.
4. Depth to bedrock is approximately 1.5 feet bgs in the parking lot on Lot 20 and 2.5 feet below grade cellar on Lot 13.
5. The stratigraphy of the site, from the surface down, consists of black or brown, medium-grained sand with fine and coarse sand and gravel to about 2 feet bgs in the parking lot on Lot 20 and about 1 foot bgs in the cellar of the library. Alternating layers of native soil, typically consisting of light brown or olive and reddish-brown silt with varying amounts of sand, clay, and gravel, and brown sand with varying amounts of silt and gravel, were identified across the Site footprint beneath the fill layer consisting of black or brown, medium-grained sand with varying amounts of fine and coarse sand and gravel.
6. The geophysical survey identified a subsurface anomaly indicative of a UST in the western portion of the cellar on Lot 13.
7. Soil/fill samples collected during the Phase II ESI were compared to NYSDEC Track 1 Unrestricted Use Soil Cleanup Objectives (SCOs) and Track 2 Restricted Residential Use SCOs as presented in 6NYCRR Part 375-6.8. Soil sampling results showed petroleum-like odors were apparent in soil boring SB02 at depths of 4 to 5 and 8 to 9 feet bgs. No staining or PID readings above background were detected. No VOCs, SVOCs, pesticides or PCBs were detected above their respective Unrestricted Use SCOs in any of the soil samples. Metals; arsenic (max. of 17 mg/kg), chromium (max. of 49 mg/kg), lead (69 mg/kg), nickel (37 mg/kg), and zinc (130 mg/kg) were detected in one or more soil samples collected from the historic fill layer at concentrations above their Unrestricted Use SCOs. Arsenic (17 mg/kg) was also detected in one sample at a concentration slightly above its respective Restricted Residential SCO in a shallow soil sample.
8. Groundwater samples collected during the Phase II ESI were compared to the NYSDEC Division of Water Technical and Operation Guidance Series (TOGS) 1.1.1 Ambient Water Quality Standards and Guidance Values (SGVs) for Class GA (drinking water).

No VOCs, SVOCs, pesticides or PCBs were detected in any of the groundwater samples. Three metals; magnesium (max. of 38,000 ug/L), manganese (max. of 560 ug/L), and sodium (max. of 99,000 ug/L) were detected at concentrations exceeding their respective SGVs.

9. Soil vapor samples collected during the Phase II ESI were compared to the air guideline values (AGVs) and applied to the decision matrices established by the NYSDOH Guidance for Evaluating Soil Vapor Intrusion in the State of New York. Four of the eight compounds, TCE, PCE, 1,1,1-trichlorethane, and methylene chloride, were detected in sub-slab and soil-vapor samples. In the absence of indoor air, a conservative comparison of the soil vapor concentrations to the decision matrices was made to evaluate whether soil vapor mitigation may be recommended. When the decision matrices are applied, "no further action" is recommended for all compounds except for methylene chloride. The NYSDOH matrix recommendation for methylene chloride ranges from "no further action" to "mitigate". Methylene chloride exceeded the AGV in one sub-slab vapor sample SV01. It should be noted that methylene chloride is a common laboratory contaminant.

Summary of the Remedial Action

The proposed remedial action achieves protection of public health and the environment for the intended use of the property. The proposed remedial action achieves all of the remedial action objectives established for the project and addresses applicable standards, criterion, and guidance; is effective in both the short-term and long-term and reduces mobility, toxicity and volume of contaminants; is cost effective and implementable; and uses standards methods that are well established in the industry.

The proposed remedial action will consist of:

1. Preparation of a Community Protection Statement and performance of all required NYC VCP Citizen Participation activities according to an approved Citizen Participation Plan.
2. Performance of a Community Air Monitoring Program for particulates and volatile organic carbon compounds.

3. Establishment of Track 4 Site-specific Soil Cleanup Objectives (SCOs).
4. Site mobilization involving Site security setup, equipment mobilization, utility mark outs and marking & staking excavation areas.
5. Completion of a Waste Characterization Study prior to excavation activities. Waste characterization soil samples will be collected at a frequency dictated by disposal facility(s).
6. Excavation and removal of soil/fill exceeding Track 4 Site Specific SCOs. The entire Site will be excavated to a depth of approximately 12 feet below grade for development purposes. A small portion of property will be excavated to the depth of 16 and 18 feet below grade for elevator pits. Approximately 12,000 tons of soil/fill will be removed from the Site and properly disposed at an appropriately licensed or permitted facility.
7. Screening of excavated soil/fill during intrusive work for indications of contamination by visual means, odor, and monitoring with a PID.
8. Management of excavated materials including temporarily stockpiling and segregating in accordance with defined material types and to prevent co-mingling of contaminated material and non-contaminated materials.
9. Removal of all USTs and ASTs that are encountered during soil/fill removal actions. It is suspected that a 3,000-gallon UST is located at the western portion of the Site. A 2,000-gallon AST is located in the southern portion of the library cellar. Registration of tanks and reporting of any petroleum spills associated with UST's and appropriate closure of these petroleum spills in compliance with applicable local, State and Federal laws and regulations.
10. Transportation and off-Site disposal of all soil/fill material at licensed or permitted facilities in accordance with applicable laws and regulations for handling, transport, and disposal, and this plan. Sampling and analysis of excavated media as required by disposal facilities. Appropriate segregation of excavated media on-Site.
11. Collection and analysis of end-point samples to determine the performance of the remedy with respect to attainment of Track 4 Site-Specific SCOs.
12. Demarcation of residual soil/fill in landscaped areas.

13. Import of materials to be used for backfill and cover in compliance with this plan and in accordance with applicable laws and regulations.
14. Construction and maintenance of an engineered composite cover consisting of a six-inch thick concrete building slab over six-inch typical compacted clean granular fill beneath all building areas. Paved rear yards will consist of a six-inch thick slab over backfilled soils.
15. Installation of a vapor barrier/waterproofing system consisting of vapor barrier beneath the building slab and outside of sub-grade foundation sidewalls to mitigate soil vapor migration into the building. The vapor barrier system will consist of a 20-mil Stego Wrap vapor barrier manufactured by Stego Industries or equivalent system below the slab throughout the full building area and outside all sub-grade foundation sidewalls. All welds, seams and penetrations will be properly sealed to prevent preferential pathways for vapor migration.
16. Performance of all activities required for the remedial action, including acquisition of required permits and attainment of pretreatment requirements, in compliance with applicable laws and regulations.
17. Groundwater ranges from 2.44 to 12.95 feet at the Site, therefore dewatering is anticipated for construction of the new building's cellar. Dewatering will be performed in compliance with city, state, and federal laws and regulations. Extracted groundwater will either be containerized for off-site licensed or permitted disposal or will be treated under a permit from New York City Department of Environmental Protection (NYCDEP) to meet pretreatment requirements prior to discharge to the sewer system.
18. Implementation of storm-water pollution prevention measures in compliance with applicable laws and regulations.
19. Submission of an approved Site Management Plan (SMP) in the Remedial Action Plan (RAR) for long-term management of residual contamination, including plans for operation, maintenance, monitoring, inspection and certification of Engineering and Institutional Controls and reporting at a specified frequency.
20. Submission of a RAR that describes the remedial activities, certifies that the remedial requirements have been achieved, defines the Site boundaries, lists any changes from

this RAWP, and describes all Engineering and Institutional Controls to be implemented at the Site.

21. Recording of a Declaration of Covenants and Restrictions that includes a listing of Engineering Controls and Institutional Controls and a requirement that management of these controls must be in compliance with an approved SMP. Institutional Controls will include prohibition of the following: (1) vegetable gardening and farming; (2) use of groundwater without treatment rendering it safe for the intended use; (3) disturbance of residual contaminated material unless it is conducted in accordance with the SMP; and (4) higher level of land usage without OER-approval.

COMMUNITY PROTECTION STATEMENT

The NYC Office of Environmental Remediation (OER) provides governmental oversight for the cleanup of contaminated property in NYC. This Remedial Action Work Plan ("cleanup plan") describes the findings of prior environmental studies, shows the location of identified contamination at the site, and describes the plans to clean up the site to protect public health and the environment.

This cleanup plan provides a very high level of protection for neighboring communities and also includes many other elements that address common community concerns, such as community air monitoring, odor, dust and noise controls, hours of operation, good housekeeping and cleanliness, truck management and routing, and opportunities for community participation. The purpose of this Community Protection Statement is to explain these community protection measures in non-technical language to simplify community review.

Project Information:

- Site Name: The Eliza
- Site Address: 4790 Broadway, New York, New York
- NYC Voluntary Cleanup Program Project Number: TBD

Project Contacts:

- OER Project Manager: Myrna Hanna, 212-341-2077
- Site Project Manager: TBD
- Site Safety Officer: TBD
- Online Document Repository: https://a002-epic.nyc.gov/app/workspace/5653/docrepository

Remedial Investigation and Cleanup Plan: Under the oversight of the NYC OER, a thorough study of this property (called a remedial investigation) has been performed to identify past property usage, to sample and test soils, groundwater and soil vapor, and to identify

contaminant sources present on the property. The cleanup plan has been designed to address all contaminant sources that have been identified during the study of this property.

Identification of Sensitive Land Uses: Prior to selecting a cleanup, the neighborhood was evaluated to identify sensitive land uses nearby, such as schools, day care facilities, hospitals and residential areas. The cleanup program was then tailored to address the special conditions of this community.

Qualitative Human Health Exposure Assessment: An important part of the cleanup planning for the Site is a study to find all of the ways that people might come in contact with contaminants at the Site now or in the future. This study is called a Qualitative Human Health Exposure Assessment (QHHEA). A QHHEA was performed for this project. This assessment has considered all known contamination at the Site and evaluated the potential for people to come in contact with this contamination. All identified public exposures will be addressed under this cleanup plan.

Health and Safety Plan: This cleanup plan includes a Construction Health and Safety Plan (CHASP) that is designed to protect community residents and on-Site workers. The elements of this RAWP are in compliance with applicable safety requirements of the United States Occupational Safety and Health Administration (OSHA). This RAWP includes many protective elements including those discussed below.

Site Safety Coordinator: This project has a designated Site safety coordinator to implement the CHASP. The safety coordinator maintains an emergency contact sheet and protocol for management of emergencies. The Site safety coordinator is identified at the beginning of this Community Protection Statement.

Worker Training: Workers participating in cleanup of contaminated material on this project are required to be trained in a 40-hour hazardous waste operators training course and to take annual refresher training. This pertains to workers performing specific tasks including removing contaminated material and installing cleanup systems in contaminated areas.

Community Air Monitoring Plan: Community air monitoring will be performed during this cleanup project to ensure that the community is properly protected from contaminants, dust and odors. Air samples will be tested in accordance with a detailed plan called the Community Air Monitoring Plan or CAMP. Results will be regularly reported to the NYC Office of Environmental Remediation. This cleanup plan also has a plan to address any unforeseen problems that might occur during the cleanup (called a 'Contingency Plan').

Odor, Dust and Noise Control: This cleanup plan includes actions for odor and dust control. These actions are designed to prevent off-Site odor and dust nuisances and includes steps to be taken if nuisances are detected. Generally, dust is managed by application of physical covers and by water sprays. Odors are controlled by limiting the area of open excavations, physical covers, spray foams and by a series of other actions (called operational measures). The project is also required to comply with applicable NYC noise control standards. If you observe problems in these areas, please contact the onsite Project Manager or NYC Office of Environmental Remediation Project Manager listed on the first page of this Community Protection Statement document.

Quality Assurance: This cleanup plan requires that evidence be provided to illustrate that all cleanup work required under the plan has been completed properly. This evidence will be summarized in the final report, called the Remedial Action Report. This report will be submitted to the NYC Office of Environmental Remediation and will be thoroughly reviewed.

Stormwater Management: To limit the potential for soil erosion and discharge, this cleanup plan has provisions for stormwater management. The main elements of the stormwater management include physical barriers such as tarp covers and erosion fencing, and a program for frequent inspection.

Hours of Operation: The hours for operation of cleanup will comply with the NYC Department of Buildings construction code requirements or according to specific variances

issued by that agency. For this cleanup project, the hours of operation will conform to requirements of the NYC Department of Buildings.

Signage: While the cleanup is in progress, a placard will be prominently posted at the main entrance of the property with a laminated project Fact Sheet that states that the project is in the NYC Voluntary Cleanup Program and provides project contact names and numbers, and a link to the document repository where project documents can be viewed.

Complaint Management: The contractor performing this cleanup is required to address all complaints. If you have any complaints, you can call the facility Project Manager or the NYC Office of Environmental Remediation Project Manager listed on the first page of this Community Protection Statement document, or call 311 and mention the Site is in the NYC Voluntary Cleanup Program.

Utility Mark-outs: To promote safety during excavation in this cleanup, the contractor is required to first identify all utilities and must perform all excavation and construction work in compliance with NYC Department of Buildings regulations.

Soil and Liquid Disposal: All soil and liquid material removed from the Site as part of the cleanup will be transported and disposed of in accordance with all applicable City, State and Federal regulations, and required permits will be obtained.

Soil Chemical Testing and Screening: All excavations will be supervised by a trained and properly qualified environmental professional. In addition to extensive sampling and chemical testing of soils on the Site, excavated soil will be screened continuously using hand-held instruments, by sight, and by smell to ensure proper material handling and management, and community protection.

Stockpile Management: Soil stockpiles will be kept covered with tarps to prevent dust, odor and erosion. Stockpiles will be frequently inspected. Damaged tarp covers will be

promptly replaced. Stockpiles will be protected with silt fences. Hay bales will be used, as needed, to protect storm water catch basins and other discharge points.

Trucks and Covers: Loaded trucks leaving the Site will be covered in compliance with applicable laws and regulations to prevent dust and odor. Trucks will be properly recorded in logs and records and placarded in compliance with applicable City, State and Federal laws, including those of the New York State Department of Transportation. If loads contain wet material that can leak, truck liners will be used. All transport of materials will be performed by licensed truckers and in compliance with applicable laws and regulations.

Imported Material: All fill materials proposed to be brought onto the Site will comply with rules outlined in this cleanup plan and will be inspected and approved by a qualified worker located on the Site. Waste materials will not be brought onto the Site. Trucks entering the Site with imported clean materials will be covered in compliance with applicable laws and regulations.

Equipment Decontamination: All equipment used for cleanup work will be inspected and washed, if needed, before it leaves the Site. Trucks will be cleaned at a truck inspection station on the property before leaving the Site.

Housekeeping: Locations where trucks enter or leave the Site will be inspected every day and cleaned regularly to ensure that they are free of dirt and other materials from the Site.

Truck Routing: Truck routes have been selected to: (a) limit transport through residential areas and past sensitive nearby properties; (b) maximize use of city-mapped truck routes; (c) limit total distance to major highways; (d) promote safety in entry to highways; (e) promote overall safety in trucking; and (f) minimize off-Site line-ups (queuing) of trucks entering the property. Operators of loaded trucks leaving the Site will be instructed not to stop or idle in the local neighborhood.

Final Report: The results of all cleanup work will be fully documented in a final report (called the Remedial Action Report) that will be available for public review online. A link to the online document repository and the public library with Internet access nearest the Site are listed on the first page of this Community Protection Statement document

Long-Term Site Management: If long-term protection is needed after the cleanup is complete, the property owner will be required to comply with an ongoing Site Management Plan that calls for continued inspection of protective controls, such as Site covers. The Site Management Plan is evaluated and approved by the NYC Office of Environmental Remediation. Requirements that the property owner must comply with are defined either in the property's deed or established through a city environmental designation registered with the Department of Buildings. A certification of continued protectiveness of the cleanup will be required from time to time to show that the approved cleanup is still effective.

REMEDIAL ACTION WORK PLAN

1.0 Project Background

Ranger Properties is working with the NYC Office of Environmental Remediation (OER) in the New York City Voluntary Cleanup Program to investigate and remediate a property located at 4790 Broadway in the Inwood section of Manhattan, New York (the "Site"). A Remedial Investigation (RI) (aka Phase II Environmental Site Investigation Report) was performed to compile and evaluate data and information necessary to develop this Remedial Action Work Plan (RAWP) in a manner that will render the Site protective of public health and the environment consistent with the contemplated end use. This RAWP establishes remedial action objectives, provides a remedial alternatives analysis that includes consideration of a permanent cleanup, and provides a description of the selected remedial action. The remedial action described in this document provides for the protection of public health and the environment, and complies with applicable environmental standards, criteria and guidance and applicable laws and regulations.

1.1 Site Location and Background

The Site is located at 4790 Broadway in the Inwood section in New York, New York and is identified as Block 2233, Lot 13 and about 6,000-square feet of the adjoining Lot 20 (partial) on the New York City Tax Map. Figure 1 shows the Site location. The Site is 18,000-square feet and is bounded by Broadway to the north beyond which are a one-story commercial building utilized as a medical office and pharmacy, and a six-story mixed residential and commercial use building; a five-story public school to the south and east; and a vacant car wash to the west. A map of the site boundary is shown in Figure 2. Currently, Lot 13 is developed with a two-story public library with a basement and operated by the New York Public Library (NYPL), and Lot 20 is developed with a public school and associated parking lot and operated by the New York City Department of Education (NYCDOE). Westernmost portion of the Lot 20 that is part of the Site is developed with an asphalt-paved parking lot. The site was developed to its existing use since 1952.

1.2 Redevelopment Plan

The proposed future use of the Site will consist of a new 14-story mixed residential and commercial building with a full cellar. The new development will be 100% affordable and will provide 174 residential apartments and community facilities. There will be setbacks on the second and 11th floors. The cellar will be utilized as kitchen, classrooms, mechanical rooms, utility rooms, storage, multi-purpose rooms, office, and bike room. The first floor will be utilized as mail package room, residential and community lobby, and library; the second floor will be utilized as classrooms, office, dining room, and library; the third through thirteenth floors will be utilized as residential apartment; the fourteenth floor will be utilized as residential apartments, lounge, gym, laundry and rooftop terrace.

In order to construct the new cellar and foundation, the entire Site will be excavated to approximately 12 feet below grade surface (bgs). The new cellar will cover approximately 75% of the Site. Remaining areas will be backfilled and will consist of approximately 3,600 square feet of paved residential rear yard, and 560 square feet of paved community/commercial rear yard. The paved yards will consist of six-inch thick concrete slab over backfilled soil. The existing building will be demolished and existing cellar will be backfilled prior to redevelopment and excavation. Groundwater ranges from 2.44 to 12.95 feet at the Site, therefore dewatering is anticipated for construction of the new building's cellar. Layout of the proposed site development is presented in Figure 3.

The remedial action contemplated under this RAWP may be implemented independently of the proposed redevelopment plan.

1.3 Description of Surrounding Property

The Site is located within primarily mixed residential and commercial use area of New York County, New York. The Site is bounded by Broadway to the north beyond which are a one-story commercial building utilized as a medical office and pharmacy, and a six-story mixed residential and commercial use building; a five-story public school to the south and east; and a vacant car wash to the west.

According to the OER Searchable Property Environmental E-Database (SPEED), there is one sensitive receptor located within 500-foot radius of the Site. JHS 052 Inwood located at 650 Academy Street is adjacent to the east of the Site. Figure 2 shows the surrounding land usage.

1.4 Summary of Past Site Uses and Areas of Concern

Based upon the review of available sanborn maps and other historical documents provided in a Phase I ESA Report prepared by Langan in July 2018, Lot 13 was comprised of two undeveloped tax lots from 1900 to 1913. These two lots were used for storage and parking in the 1935 map, and were merged into a singular Lot 13 by the 1968 map. In the 1968 map, the Inwood Branch Public Library is visible and the map indicates that the structure was built in 1951. The maps indicate that a school has been present on Lot 20 since 1893; however, the portion of Lot 20 that comprises the Site remained undeveloped.

The AOCs identified for this site include:

1. Presence of historic fill to a depth of 2 feet bgs beneath Lot 20 and 1 foot beneath the library cellar on Lot 13.
2. A subsurface anomaly indicative of a UST in the western portion of the cellar on Lot 13.
3. A 2,000-gallon steel AST containing number 2 fuel oil is located in the southern portion of the cellar on Lot 13. The AST and surrounding concrete slab were observed to be in good condition during the assessments.

1.5 Summary of Work Performed under the Phase II ESI

Langan performed the following work on June 26 and 27, 2018:

1. A Site inspection to identify AOCs and physical obstructions (i.e. structures, buildings, etc.);
2. Completion of a geophysical survey to identify any anomalies indicative of tanks, and located buried utilities;
3. Installation of six soil borings across the entire project Site, and collection of 13 soil samples for chemical analysis from the soil borings to evaluate soil quality;
4. Installation of three groundwater monitoring wells throughout the Site to establish groundwater flow and collection of four groundwater samples for chemical analysis to evaluate groundwater quality;

5. Installation of one soil vapor probe and three sub-slab vapor points around Site perimeter and collection of four soil vapor samples for chemical analysis.

1.6 Summary of Findings of the Phase II ESI

A remedial investigation was performed and the results are documented in a companion document called "Phase II Environmental Site Investigation Report, 4790 Broadway, New York, New York", dated August 2018 (Phase II ESI).

1. Elevation of the property is approximately 21.8 feet.
2. Depth to groundwater ranges from 2.44 to 12.95 feet at the Site.
3. Groundwater flow is towards southeast.
4. Depth to bedrock is approximately 1.5 feet bgs in the parking lot on Lot 20 and 2.5 feet below grade cellar on Lot 13.
5. The stratigraphy of the site, from the surface down, consists of black or brown, medium-grained sand with fine and coarse sand and gravel to about 2 feet bgs in the parking lot on Lot 20 and about 1 foot bgs in the cellar of the library. Alternating layers of native soil, typically consisting of light brown or olive and reddish-brown silt with varying amounts of sand, clay, and gravel, and brown sand with varying amounts of silt and gravel, were identified across the Site footprint beneath the fill layer consisting of black or brown, medium-grained sand with varying amounts of fine and coarse sand and gravel..
6. The geophysical survey identified a subsurface anomaly indicative of a UST in the western portion of the cellar on Lot 13.
7. Soil/fill samples collected during the Phase II ESI were compared to NYSDEC Track 1 Unrestricted Use Soil Cleanup Objectives (SCOs) and Track 2 Restricted Residential Use SCOs as presented in 6NYCRR Part 375-6.8. Soil sampling results showed petroleum-like odors were apparent in soil boring SB02 at depths of 4 to 5 and 8 to 9 feet bgs. No staining or PID readings above background were detected. No VOCs, SVOCs, pesticides or PCBs were detected above their respective Unrestricted Use SCOs in any of the soil samples. Metals; arsenic (max. of 17 mg/kg), chromium (max. of 49 mg/kg), lead (69 mg/kg), nickel (37 mg/kg), and zinc (130 mg/kg) were detected in one or more soil

samples collected from the historic fill layer at concentrations above their Unrestricted Use SCOs. Arsenic (17 mg/kg) was also detected in one sample at a concentration slightly above its respective Restricted Residential SCO in a shallow soil sample.

8. Groundwater samples collected during the Phase II ESI were compared to the NYSDEC Division of Water Technical and Operation Guidance Series (TOGS) 1.1.1 Ambient Water Quality Standards and Guidance Values (SGVs) for Class GA (drinking water). No VOCs, SVOCs, pesticides or PCBs were detected in any of the groundwater samples. Three metals; magnesium (max. of 38,000 ug/L), manganese (max. of 560 ug/L), and sodium (max. of 99,000 ug/L) were detected at concentrations exceeding their respective SGVs.

9. Soil vapor samples collected during the Phase II ESI were compared to the air guideline values (AGVs) and applied to the decision matrices established by the NYSDOH Guidance for Evaluating Soil Vapor Intrusion in the State of New York. Four of the eight compounds, TCE, PCE, 1,1,1-trichlorethane, and methylene chloride, were detected in sub-slab and soil-vapor samples. In the absence of indoor air, a conservative comparison of the soil vapor concentrations to the decision matrices was made to evaluate whether soil vapor mitigation may be recommended. When the decision matrices are applied, "no further action" is recommended for all compounds except for methylene chloride. The NYSDOH matrix recommendation for methylene chloride ranges from "no further action" to "mitigate". Methylene chloride exceeded the AGV in one sub-slab vapor sample SV01. It should be noted that methylene chloride is a common laboratory contaminant.

For more detailed results, consult the Phase II ESI Report. Based on an evaluation of the data and information from the Phase II ESI Report and this RAWP, disposal of significant amounts of hazardous waste is not suspected at this site.

2.0 Remedial Action Objectives

Based on the results of the RI, the following Remedial Action Objectives (RAOs) have been identified for this Site:

Soil

- Prevent direct contact with soil.

Groundwater

- Prevent direct exposure to groundwater.

Soil Vapor

- Prevent exposure to contaminants in soil vapor.
- Prevent migration of soil vapor into dwelling and other occupied structures.

3.0 Remedial Alternatives Analysis

The goal of the remedy selection process is to select a remedy that is protective of human health and the environment taking into consideration the current, intended and reasonably anticipated future use of the property. The remedy selection process begins by establishing RAOs for media in which chemical constituents were found in exceedance of applicable standards, criteria and guidance values (SCGs). Remedial alternatives are then developed and evaluated based on the following ten criteria:

- Protection of human health and the environment;
- Compliance with SCGs;
- Short-term effectiveness and impacts;
- Long-term effectiveness and permanence;
- Reduction of toxicity, mobility, or volume of contaminated material;
- Implementability;
- Cost effectiveness;
- Community acceptance;
- Land use; and
- Sustainability.

As required, a Track 1 Unrestricted Use scenario is evaluated for the remedial action. The following is a detailed description of the alternatives analyzed to address impacted media at the Site:

Alternative 1:

- Selection of NYSDEC 6NYCRR Part 375 Unrestricted Use (Track 1) Soil Cleanup Objectives (SCOs).
- Removal of all soil/fill exceeding Track 1 Unrestricted Use SCOs throughout the Site and confirmation that Track 1 Unrestricted Use SCOs have been achieved with post-excavation endpoint sampling. If soil/fill containing analytes at concentrations above Unrestricted Use SCOs is still present at the base of the excavation after removal of all soil required for construction of the new building's cellar level is complete, additional excavation would be performed to ensure complete removal of soil/ fill that does not meet Track 1 Unrestricted Use SCOs.

- No Engineering or Institutional Controls are required for a Track 1 cleanup. However, as part of development, a vapor barrier/waterproofing system would be installed to prevent potential exposures from soil vapor in the future.

Alternative 2:

- Establishment of Track 4 Site-Specific SCOs.
- Removal of all soil/fill exceeding Track 4 Site-specific SCOs and confirmation that Track 4 Site-specific SCOs have been achieved with post-excavation end point sampling. Based on the results of the Phase II ESI, it is expected that this alternative would be achieved by excavating the Site to a depth of about 8-10 feet (i.e. historic fill extends up to 1 foot beneath the library cellar). As part of development, soil beneath the entire Site will be removed to a depth of 12 feet. If soil/fill containing analytes at concentrations above Track 4 Site-specific SCOs is still present at the base of the excavation, additional excavation would be performed to meet Track 4 Site-Specific SCOs.
- Placement of a composite cover system over the entire Site to prevent exposure to remaining soil/fill;
- Installation of a vapor barrier/waterproofing system beneath the building slab and along foundation side walls to prevent potential exposures from soil vapor;
- Establishment of use restrictions including prohibitions on the use of groundwater from the Site; prohibitions of restricted Site uses, such as farming or vegetable gardening, to prevent future exposure pathways; and prohibition of a higher level of land use without OER approval;
- Establishment of an approved Site Management Plan (SMP) to ensure long-term management of these Engineering and Institutional Controls including the performance of periodic inspections and certification that the controls are performing as they were intended. The SMP will note that the property owner and property owner's successors and assigns must comply with the approved SMP; and
- Placement of a deed notice to record the ECs/ICs on the deed to ensure that future owners of the Site continue to comply with the SMP, as required.

3.1 Threshold Criteria

Protection of Public Health and the Environment

This criterion is an evaluation of the remedy's ability to protect public health and the environment, and an assessment of how risks posed through each existing or potential pathway of exposure are eliminated, reduced or controlled through removal, treatment, and implementation of Engineering Controls or Institutional Controls. Protection of public health and the environment must be achieved for all approved remedial actions.

Alternative 1 would be protective of human health and the environment by removing all soil/fill exceeding Track 1 Unrestricted Use SCO's and groundwater protection standards, thus eliminating potential for direct contact with contaminated soil/fill once construction is complete and eliminating the risk of contaminants leaching into groundwater.

Alternative 2 would achieve comparable protections of human health and the environment by excavation and removal of most of the historic fill at the Site and by ensuring that remaining soil/fill on-Site meets Track 4 Site-Specific SCO's, as well as by placement of Institutional and Engineering Controls, including a composite cover system. The composite cover system would prevent direct contact with any remaining on-Site soil/fill. Implementing Institutional Controls including a Site Management Plan would ensure that the composite cover system remains intact and protective of public health. Establishment of Track 4 Site-Specific SCO's would minimize the risk of contamination leaching into groundwater.

For both Alternatives, potential exposure to contaminated soils or groundwater during construction would be minimized by implementing a Construction Health and Safety Plan, an approved Soil/Materials Management Plan, and Community Air Monitoring Plan (CAMP). Potential contact with contaminated groundwater would be prevented as its use is prohibited by city laws and regulations. Potential future migration of off-Site soil vapors into the new building would be prevented by installing a vapor barrier below the building slab and outside foundations walls below grade.

3.2 Balancing Criteria

Compliance with Standards, Criteria and Guidance (SCGs)

This evaluation criterion assesses the ability of the alternative to achieve applicable standards, criteria and guidance.

Alternative 1 would achieve compliance with the remedial goals, chemical-specific SCGs and RAOs for soil through removal of soil to achieve Track 1 Unrestricted Use SCO's and Protection of Groundwater SCO's. Compliance with SCGs for soil vapor would also be achieved by installing a waterproofing/vapor barrier system below the new building's basement slab and continuing the vapor barrier outside of subgrade foundation walls, as part of development.

Alternative 2 would achieve compliance with the remedial goals, chemical-specific SCG's and RAOs for soil through removal of soil to meet Track 4 Site-Specific SCO's. Compliance with SCG's for soil vapor would also be achieved by installing a waterproofing/vapor barrier system below the new building's basement slab and continuing the vapor barrier outside of subgrade foundation walls. A Site Management Plan would ensure that these controls remained protective for the long term.

Health and safety measures contained in the CHASP and Community Air Monitoring Plan (CAMP) will be implemented during Site redevelopment under this RAWP. For both Alternatives, focused attention on means and methods employed during the remedial action would ensure that handling and management of contaminated material would be in compliance with applicable SCGs. These measures will protect on-site workers and the surrounding community from exposure to Site-related contaminants.

Short-Term Effectiveness and Impacts

This evaluation criterion assesses the effects of the alternative during the construction and implementation phase until remedial action objectives are met. Under this criterion, alternatives are evaluated with respect to their short term effects during the remedial action on public health

and the environment during implementation of the remedial action, including protection of the community, protection of onsite workers and environmental impacts.

Both Alternative 1 and 2 have similar short-term effectiveness during their implementation, as each requires excavation of historic fill material. Both alternatives would result in short-term dust generation impacts associated with excavation, handling, load out of materials, and truck traffic. Short-term impacts could potentially be higher for Alternative 1 since excavation of greater amounts of historical fill material would take place. However, focused attention to means and methods during a Track 1 removal action, including community air monitoring and appropriate truck routing, would minimize the overall impact of these activities.

An additional short-term adverse impact and risks to the community associated with both remedial alternatives is increased truck traffic. Truck traffic will be routed on the most direct course using major thoroughfares where possible and flag persons will be used to protect pedestrians at Site entrances and exits.

The potential adverse impact to the community, workers and the environment for both alternatives would be minimized through implementation of control plans including a Construction Health and Safety Plan, a Community Air Monitoring Plan (CAMP) and a Soil/Materials Management Plan (SMMP), during all on-Site soil disturbance activities and would minimize the release of contaminants into the environment. Both alternatives provide short-term effectiveness in protecting the surrounding community by decreasing the risk of contact with on-Site contaminants. Construction workers operating under appropriate management procedures and a Construction Health and Safety Plan (CHASP) would provide protection from on-Site contaminants by using personal protective equipment would be worn consistent with the documented risks within the respective work zones.

Long-term effectiveness and permanence

This evaluation criterion addresses the results of a remedial action in terms of its permanence and quantity/nature of waste or residual contamination remaining at the Site after response objectives have been met, such as permanence of the remedial alternative, magnitude of

remaining contamination, adequacy of controls including the adequacy and suitability of Engineering Controls/Institutional Controls (ECs/ICs) that may be used to manage contaminant residuals that remain at the Site and assessment of containment systems and ICs that are designed to eliminate exposures to contaminants, and long-term reliability of ECs.

Alternative 1 would achieve long-term effectiveness and permanence related to on-Site contamination by permanently removing all impacted soil/fill above Track 1 Unrestricted Use SCO's. Removal of on-Site contaminant sources will also prevent future groundwater contamination.

Alternative 2 would provide long-term effectiveness by removing most on-Site contamination and attaining Track 4 Site-Specific SCOs; installing a composite cover system across the Site; maintaining use restrictions; establishing an SMP to ensure long-term management of ICs and ECs; and instituting a restrictive declaration to memorialize these controls for the long term. The SMP would ensure long-term effectiveness of all ECs and ICs by requiring periodic inspection and certification that these controls and restrictions continue to be in place and are functioning as they were intended, assuring that protections designed into the remedy continue to provide the required level of protection.

Reduction of toxicity, mobility, or volume of contaminated material

This evaluation criterion assesses the remedial alternative's use of remedial technologies that permanently and significantly reduce toxicity, mobility, or volume of contaminants as their principal element. The following is the hierarchy of source removal and control measures that are to be used to remediate a Site, ranked from most preferable to least preferable: removal and/or treatment, containment, elimination of exposure and treatment of source at the point of exposure. It is preferred to use treatment or removal to eliminate contaminants at a Site, reduce the total mass of toxic contaminants, cause irreversible reduction in contaminants mobility, or reduce of total volume of contaminated media.

Alternative 1 will permanently eliminate the toxicity, mobility, and volume of contaminants from on-Site soil by removing all soil in excess of Track 1 Unrestricted Use SCO's.

Alternative 2 would remove most of the historic fill at the Site, and all remaining on-Site soil/fill beneath the new building will meet Track 4 Site-Specific SCO's.

Alternative 1 would remove a greater total mass of contaminants from the Site. The removal of soil to 12 feet for the new development in both scenarios would lessen the difference in contaminant mass removal between these two alternatives.

Implementability

This evaluation criterion addresses the technical and administrative feasibility of implementing an alternative and the availability of various services and materials required during its implementation, including technical feasibility of construction and operation, reliability of the selected technology, ease of undertaking remedial action, monitoring considerations, administrative feasibility (e.g. obtaining permits for remedial activities), and availability of services and materials.

The techniques, materials and equipment to implement both Alternatives 1 and 2 are readily available and have been proven to be effective in remediating the contaminants present on the Site. They use standard equipment and technologies that are well established in the industry. The reliability of each remedy is also high. There are no special difficulties associated with any of the activities proposed.

Cost effectiveness

This evaluation criterion addresses the cost of alternatives, including capital costs (such as construction costs, equipment costs, and disposal costs, engineering expenses) and site management costs (costs incurred after remedial construction is complete) necessary to ensure the continued effectiveness of a remedial action.

Since historic fill at the Site was found to extend to a depth of up to 1 foot beneath the library cellar during the Phase II ESI, and the new building requires excavation of the entire Site to a depth of 12 feet, the costs associated with both Alternative 1 will be significantly higher than Alternative 2. Additional costs would include installation of additional shoring/underpinning,

disposal of additional soil, and import of clean soil for backfill. However, long-term costs for Alternative 2 are likely higher than Alternative 1 based on implementation of a Site Management Plan as part of Alternative 2.

The remedial plan would couple the remedial action with the redevelopment of the Site, lowering total costs. The remedial plan will also consider the selection of the most appropriate disposal facilities to reduce transportation and disposal costs during cleanup and redevelopment of the Site.

Community Acceptance

This evaluation criterion addresses community opinion and support for the remedial action. Observations here will be supplemented by public comment received on the RAWP.

This RAWP will be subject to a public review under the NYC VCP and will provide the opportunity for detailed public input on the remedial alternatives and the selected remedy. This public comment will be considered by OER prior to approval of this plan. The Citizen Participation Plan for the project is provided in Appendix 2. Observations here will be supplemented by public comment received on the RAWP. Under both alternatives, the overall goals of the remedial program, to protect public health and the environment and eliminate potential contaminant exposures, have been broadly supported by citizens in NYC communities.

Land use

This evaluation criterion addresses the proposed use of the property. This evaluation has considered reasonably anticipated future uses of the Site and takes into account: current use and historical and/or recent development patterns; applicable zoning laws and maps; NYS Department of State's Brownfield Opportunity Areas (BOA) pursuant to section 970-r of the general municipal law; applicable land use plans; proximity to real property currently used for residential use, and to commercial, industrial, agricultural, and/or recreational areas; environmental justice impacts, Federal or State land use designations; population growth patterns and projections; accessibility to existing infrastructure; proximity of the site to important cultural resources and natural resources, potential vulnerability of groundwater to contamination that

might emanate from the site, proximity to flood plains, geography and geology; and current Institutional Controls applicable to the site.

The current, intended, and reasonably anticipated future land use of the Site and its surroundings are compatible with the selected remedy of soil remediation. The proposed future use of the Site includes a 14-story, 100% affordable and supportive housing project to provide 174 dwelling units between third and 14th floors, community space and library in basement, on first and second floors. Following remediation, the Site will meet either Track 1 Unrestricted Use or Track 4 Site-Specific SCOs, both of which are protective of public health and the environment for its planned residential use. The proposed use is compliant with the property's zoning and is consistent with recent development patterns. The areas surrounding the site is urban and consists of predominantly mixed residential and commercial buildings in zoning districts designated for commercial and residential uses. The development would remediate an old library and parking lot and provide a modern affordable residential building. The proposed development would clean up the property and make it safer, create new employment opportunities, living space for affordable and supportive housing and associated societal benefits to the community, and other economic benefits from land revitalization.

Temporary short-term project impacts are being mitigated through site management controls and truck traffic controls during remediation activities. Following remediation, the Site will meet either Track 1 Unrestricted Use SCOs or Track 4 Site-Specific SCOs, both of which are protective of public health and the environmental for its planned use.

The Site is not in close proximity to important cultural resources, including federal or state historic or heritage sites or Native American religious sites, natural resources, waterways, wildlife refuges, wetlands, or critical habitats of endangered or threatened species. The Site is located in an urban area and not in proximity to fish or wildlife and neither alternative would result in any potential exposure pathways of contaminant migration affecting fish or wildlife. The remedial action is also protective of groundwater natural resources. The Site does not lie in a Federal Emergency Management Agency (FEMA)-designated flood plain. Both alternatives are equally protective of natural resources and cultural resources. Improvements in the current

environmental condition of the property achieved by both alternatives considered in this plan are consistent with the City's goals for cleanup of contaminated land.

Sustainability of the Remedial Action

This criterion evaluates the overall sustainability of the remedial action alternatives and the degree to which sustainable means are employed to implement the remedial action including those that take into consideration NYC's sustainability goals defined in PlaNYC: A Greener, Greater New York. Sustainability goals may include: maximizing the recycling and reuse of non-virgin materials; reducing the consumption of virgin and non-renewable resources; minimizing energy consumption and greenhouse gas emissions; improving energy efficiency; and promotion of the use of native vegetation and enhancing biodiversity during landscaping associated with Site development.

While Alternative 2 would potentially result in lower energy usage based on reducing the volume of material transported off-Site, both remedial alternatives are comparable with respect to the opportunity to achieve sustainable remedial action. The remedial plan for either alternative would take into consideration the shortest trucking routes during off-Site disposal of historic fill and other soils, which would reduce greenhouse gas emissions and conserve energy used to fuel trucks. The New York City Clean Soil Bank program is available for reuse of any clean native soils under either alternative. A complete list of green remedial activities considered as part of the NYC VCP is included in a Sustainability Statement.

Selection of the Preferred Remedy

"The preferred remedy for the site is Alternative 2, Track 4 Site Specific SCOs. Unrestricted Use Track 1 Alternative can be achieved with additional excavation in residential rear yard and community rear yard areas of the property, which will be confirmed by end point samples. If Unrestricted Use SCOs are achieved, Track 1 will be given to this Site. The Alternative 2 remedy will remove all soil/fill exceeding Track 4 Site Specific Use SCOs throughout the Site, which will be confirmed with post-excavation sampling. Engineering Controls are required for a Track 4 cleanups. A concrete cellar slab covering the entire site and a vapor barrier would be installed as part of standard building development and are not considered part of the remedy. Additional

soil vapor management would not be required. Use restrictions will be imposed on the site (including prohibitions on any use higher than Restricted Residential, e.g. the use of groundwater from the Site; prohibitions of restricted Site uses, such as farming or vegetable gardening, to prevent future exposure pathways; and prohibition of a higher level of land use without NYSDEC approval). A deed restrictions will be placed on property to inform future owners of the Site.

4.0 Remedial Action

4.1 Summary of Preferred Remedial Action

The preferred remedial action alternative is Alternative 2, the Track 4 Site-Specific SCOs remedial action. The preferred remedial action achieves protection of public health and the environment for the intended use of the property. The preferred remedial action will achieve all of the remedial action objectives established for the project and addresses applicable SCGs. The preferred remedial action is effective in both the short-term and long-term and reduces mobility, toxicity and volume of contaminants. The preferred remedial action alternative is cost effective and implementable and uses standards methods that are well established in the industry.

The proposed remedial action will consist of:

1. Preparation of a Community Protection Statement and performance of all required NYC VCP Citizen Participation activities according to an approved Citizen Participation Plan.
2. Performance of a Community Air Monitoring Program for particulates and volatile organic carbon compounds.
3. Establishment of Track 4 Site-specific Soil Cleanup Objectives (SCOs).
4. Site mobilization involving Site security setup, equipment mobilization, utility mark outs and marking & staking excavation areas.
5. Completion of a Waste Characterization Study prior to excavation activities. Waste characterization soil samples will be collected at a frequency dictated by disposal facility(s).
6. Excavation and removal of soil/fill exceeding Track 4 Site Specific SCOs. The entire Site will be excavated to a depth of approximately 12 feet below grade for development purposes. A small portion of property will be excavated to the depth of 16 and 18 feet below grade for elevator pits. Approximately 12,000 tons of soil/fill will be removed from the Site and properly disposed at an appropriately licensed or permitted facility.
7. Screening of excavated soil/fill during intrusive work for indications of contamination by visual means, odor, and monitoring with a PID.

8. Management of excavated materials including temporarily stockpiling and segregating in accordance with defined material types and to prevent co-mingling of contaminated material and non-contaminated materials.
9. Removal of all USTs that are encountered during soil/fill removal actions. It is suspected that a 3,000-gallon UST is located at the western portion of the Site. A 2,000-gallon AST is located in the southern portion of the library cellar. Registration of tanks and reporting of any petroleum spills associated with UST's and appropriate closure of these petroleum spills in compliance with applicable local, State and Federal laws and regulations.
10. Transportation and off-Site disposal of all soil/fill material at licensed or permitted facilities in accordance with applicable laws and regulations for handling, transport, and disposal, and this plan. Sampling and analysis of excavated media as required by disposal facilities. Appropriate segregation of excavated media on-Site.
11. Collection and analysis of end-point samples to determine the performance of the remedy with respect to attainment of Track 4 Site-Specific SCOs.
12. Demarcation of residual soil/fill in landscaped areas.
13. Import of materials to be used for backfill and cover in compliance with this plan and in accordance with applicable laws and regulations.
14. Construction and maintenance of an engineered composite cover consisting of a six-inch thick concrete building slab over six-inch typical compacted clean granular fill beneath all building areas. Paved rear yards will consist of a six-inch thick slab over backfilled soils.
15. Installation of a vapor barrier/waterproofing system consisting of vapor barrier beneath the building slab and outside of sub-grade foundation sidewalls to mitigate soil vapor migration into the building. The vapor barrier system will consist of a 20-mil Stego Wrap vapor barrier manufactured by Stego Industries or equivalent system below the slab throughout the full building area and outside all sub-grade foundation sidewalls. All welds, seams and penetrations will be properly sealed to prevent preferential pathways for vapor migration.

16. Performance of all activities required for the remedial action, including acquisition of required permits and attainment of pretreatment requirements, in compliance with applicable laws and regulations.
17. Groundwater ranges from 2.44 to 12.95 feet at the Site, therefore dewatering is anticipated for construction of the new building's cellar. Dewatering will be performed in compliance with city, state, and federal laws and regulations. Extracted groundwater will either be containerized for off-site licensed or permitted disposal or will be treated under a permit from New York City Department of Environmental Protection (NYCDEP) to meet pretreatment requirements prior to discharge to the sewer system.
18. Implementation of storm-water pollution prevention measures in compliance with applicable laws and regulations.
19. Submission of an approved Site Management Plan (SMP) in the Remedial Action Plan (RAR) for long-term management of residual contamination, including plans for operation, maintenance, monitoring, inspection and certification of Engineering and Institutional Controls and reporting at a specified frequency.
20. Submission of a RAR that describes the remedial activities, certifies that the remedial requirements have been achieved, defines the Site boundaries, lists any changes from this RAWP, and describes all Engineering and Institutional Controls to be implemented at the Site.
21. Recording of a Declaration of Covenants and Restrictions that includes a listing of Engineering Controls and Institutional Controls and a requirement that management of these controls must be in compliance with an approved SMP. Institutional Controls will include prohibition of the following: (1) vegetable gardening and farming; (2) use of groundwater without treatment rendering it safe for the intended use; (3) disturbance of residual contaminated material unless it is conducted in accordance with the SMP; and (4) higher level of land usage without OER-approval.

4.2 Soil Cleanup Objectives and Soil/ Fill Management

Site Specific Use, Track 4 remediation is proposed for this project. The SCOs for this property will include NYSDEC Part 375 Section 6.2(b) Restricted Residential Use SCOs as amended by the following Track 4 Site-Specific SCO's:

Contaminant	Site-Specific SCO's
Total SVOCs	200 ppm
Lead	800 ppm
Arsenic	26 ppm

Soil and materials management on-Site and off-Site, including excavation, handling and disposal, will be conducted in accordance with the Soil/Materials Management Plan in Appendix 4. Discrete contaminant sources (such as hotspots) identified during the remedial action will be identified by GPS or surveyed. This information will be provided in the Remedial Action Report.

Soil/Fill Excavation and Removal

The entire Site will be excavated to a depth of approximately 12 feet bgs for the construction of a new cellar and building foundations, two small areas will be excavated to approximately 16 and 18 feet bgs for the installation of two elevator pits. The new cellar will cover approximately 75% of the Site. Remainder areas will consist of paved rear yards. The location of planned excavations is shown in Figure 5. The total quantity of soil/fill expected to be excavated and disposed off-Site is 12,000 tons. For each disposal facility to be used in the remedial action, a letter from the developer/QEP to the receiving facility requesting approval for disposal and a letter back to the developer/QEP providing approval for disposal will be submitted to OER prior to any transport and disposal of soil at a facility.

Disposal facilities will be reported to OER when they are identified and prior to the start of remedial action.

End-point Sampling

End-point samples will be analyzed for compounds and elements as described below utilizing the following methodology:

- Volatile organic compounds by EPA Method 8260;

- Semi-volatile organic compounds by EPA Method 8270;
- Target Analyte List metals; and
- Pesticides/PCBs by EPA Method 8081/8082.

New York State ELAP certified labs will be used for all end-point sample analyses. Labs performing end-point sample analyses will be reported in the RAR. The RAR will provide a tabular and map summary of all end-point sample results and will include all data including non-detects and applicable standards and/or guidance values.

Confirmation End-point Sampling

Removal actions for development purposes under this plan will be performed in conjunction with confirmation end-point soil sampling. Three confirmation samples will be collected from the base of the excavation at locations to be determined by OER. Two additional end point samples will be obtained in rear yard areas. To evaluate attainment of Track 4, SCOs, samples will be analyzed for VOCs, SVOCs, pesticides, PCBs and metals according to analytical methods described above. The location of the proposed endpoint soil samples is provided in Figure 4.

Hotspot End-point Sampling

For any hotspots identified during this remedial program, including any hotspots identified during the remedial action, hotspot removal actions will be performed to ensure that hotspots are fully removed and end-point samples will be collected at the following frequency:

1. For excavations less than 20 feet in total perimeter, at least one bottom sample and one sidewall sample biased in the direction of surface runoff.
2. For excavations 20 to 300 feet in perimeter:
    - For surface removals, one sample from the top of each sidewall for every 30 linear feet of sidewall and one sample from the excavation bottom for every 900 square feet of bottom area.
    - For subsurface removals, one sample from each sidewall for every 30 linear feet of sidewall and one sample from the excavation bottom for every 900 square feet of bottom area.

3. For sampling of volatile organics, bottom samples should be taken within 24 hours of excavation, and should be taken from the zero to six-inch interval at the excavation floor. Samples taken after 24 hours should be taken at six to twelve inches.
4. For contaminated soil removal, post remediation soil samples for laboratory analysis should be taken immediately after contaminated soil removal. If the excavation is enlarged horizontally, additional soil samples will be taken pursuant to bullets 1-3 above.

Post-remediation end-point sample locations and depth will be biased towards the areas and depths of highest contamination identified during previous sampling episodes unless field indicators such as field instrument measurements or visual contamination identified during the remedial action indicate that other locations and depths may be more heavily contaminated. In all cases, post-remediation samples should be biased toward locations and depths of the highest expected contamination.

If either LNAPL and/or DNAPL are detected, appropriate samples will be collected for characterization and "finger print analysis" and required regulatory reporting (i.e. spills hotline) will be performed.

Quality Assurance/Quality Control

The accuracy, precision and completeness of the samples will be addressed by the certified laboratory for all data generated.

One blind duplicate sample for every 20 samples will be collected and submitted to the laboratory for analysis of the same parameters. Trip blanks are not planned to be used since end-point samples will not be analyzed for VOCs; however, if required, one trip blank will be used whenever samples are collected and transported to the laboratory for analysis of VOCs.
Samples will be collected using dedicated, disposable sampling equipment to eliminate to prepare field blanks, and will be immediately placed into laboratory supplied, pre-cleaned containers. If non-disposable equipment is used (i.e. stainless steel scoop, etc.), a field blank will be used at the rate of 1 for every 5 samples collected. Samples will be preserved in a chilled cooler to maintain a temperature of 4° C.

Decontamination of non-dedicated sampling equipment will consist of the following procedure:

- Gently tap or scrape to remove adhered soil
- Rinse with tap water
- Wash with alconox detergent solution and scrub
- Rinse with tap water
- Rinse with distilled or deionized water

Field blanks, if needed, will be prepared by pouring distilled or deionized water over utilized equipment and collecting the poured water in laboratory supplied containers.

Import of Soils

Soil import is not planned on this project. If needed, import of soils onto the property will be performed in conformance with the Soil/Materials Management Plan in Appendix 4. Imported soil will meet:

- Track 1 Unrestricted Use SCOs

Reuse of Onsite Soils

Soil reuse is not planned on this project.

4.3 Engineering Controls

Engineering Controls will be employed in the remedial action to address residual contamination remaining at the site. The Site has 2 primary Engineering Control Systems. These are:

(1) Composite Cover System
(2) Soil Vapor Barrier/Waterproofing System

Composite Cover System

Exposure to residual soil/fill will be prevented by an engineered, composite cover system to be built on the Site. This composite cover system will be comprised of 6 inches of reinforced concrete slab underlain by 6 inches of clean compacted sub-base material in building areas. The composite cover system for the rear yards will consist of 6 inches of concrete slab underlain by

compacted soils. Figure 6 shows the location and typical design for each remedial cover type used on this Site.

The composite cover system will be a permanent engineering control. The system will be inspected and its performance certified at specified intervals as required by this RAWP and the Site Management Plan. A Soil and Materials Management Plan will be included in the Site Management Plan and will outline the procedures to be followed in the event that the composite cover system and underlying residual soil/fill is disturbed after the remedial action is complete. Maintenance of this composite cover system will be described in the Site Management Plan in the Remedial Action Report.

Vapor Barrier/Waterproofing System

Migration of soil vapor from onsite or offsite sources into the building will be mitigated with a combination of building slab and vapor barrier. The vapor barrier/waterproofing system will consist of 20-mil Stego-Wrap as manufactured by Stego Industries or equivalent system below the slab throughout the full building area and outside all sub-grade foundation sidewalls. All welds, seams and penetrations will be properly sealed according to the manufacturers' specifications to prevent preferential pathways for vapor migration. The vapor barrier will extend throughout the area occupied by the footprint of the new building and up the foundation sidewalls and will be installed in accordance with manufacturer specifications.

A plan view showing the location and typical design sections of the proposed vapor barrier system is provided in Figure 7. Product specification sheets are provided in Appendix 6. The Remedial Action Report will include as-built drawings and diagrams; manufacturer documentation; and photographs.

The Vapor Barrier/Waterproofing System is a permanent engineering control and will be inspected and its performance certified at specified intervals as required by this RAWP and the Site Management Plan. A Soil and Materials Management Plan will be included in the Site Management Plan and will outline the procedures to be followed in the event that the composite cover system and underlying vapor barrier system is disturbed after the remedial action is

complete. Maintenance of these systems will be described in the Site Management Plan in the Remedial Action Report.

4.4 Institutional Controls

A series of Institutional Controls (IC's) are required under this Remedial Action to assure permanent protection of public health by elimination of exposure to residual materials. These IC's define the program to operate, maintain, inspect and certify the performance of Engineering Controls and Institutional Controls on this property. Institutional Controls would be implemented in accordance with a Site Management Plan included in the final Remedial Action Report (RAR). Institutional Controls would be:

- Recording of an OER-approved Declaration of Covenant and Restrictions (DCR) with the City Register or county clerk, as appropriate. The DCR will include a description of all ECs and ICs, will summarize the requirements of the SMP, and will note that the property owner and property owner's successors and assigns must comply with the DCR and the approved SMP. The recorded DCR will be submitted in the Remedial Action Report. The DCR will be recorded prior to OER issuance of the Notice of Completion;
- Submittal of a SMP in the RAR for approval by OER that provides procedures for appropriate operation, maintenance, inspection, and certification of ECs and IC's. SMP will require that the property owner and property owner's successors and assigns will submit to OER a periodic written statement that certifies that: (1) controls employed at the Site are unchanged from the previous certification or that any changes to the controls were approved by OER; and, (2) nothing has occurred that impairs the ability of the controls to protect public health and environment or that constitute a violation or failure to comply with the SMP. OER retains the right to enter the Site in order to evaluate the continued maintenance of any controls. This certification shall be submitted at a frequency to be determine by OER in the SMP and will comply with RCNY §43-1407(l)(3).
- Vegetable gardens and farming on the Site are prohibited in contact with residual soil materials;

- Use of groundwater underlying the Site is prohibited without treatment rendering it safe for its intended use;
- All future activities on the Site that will disturb residual material must be conducted pursuant to the soil management provisions in an approved SMP;
- The Site will be used for residential and commercial and will not be used for a higher level of use without prior approval by OER.

4.5 Site Management Plan

Site Management is the last phase of remediation and begins with the approval of the Remedial Action Report and issuance of the Notice of Completion (NOC) for the Remedial Action. The Site Management Plan (SMP) describes appropriate methods and procedures to ensure implementation of all ECs and ICs that are required by this RAWP. The Site Management Plan is submitted as part of the RAR but will be written in a manner that allows its use as an independent document. Site Management continues until terminated in writing by OER. The property owner is responsible to ensure that all Site Management responsibilities defined in the Site Management Plan are implemented. The SMP will provide a detailed description of the procedures required to manage residual soil/fill left in place following completion of the remedial action in accordance with the Voluntary Cleanup Agreement with OER. This includes a plan for: (1) implementation of EC's and ICs; (2) operation and maintenance of EC's; (3) inspection and certification of IC's and EC's.

Site management activities and EC/IC certification will be scheduled by OER on a periodic basis to be established in the RAR and the SMP and will be subject to review and modification by OER. The Site Management Plan will be based on a calendar year and certification reports will be due for submission to OER by July 30 of the year following the reporting period.

4.6 Qualitative Human Health Exposure Assessment

The objective of the qualitative exposure assessment is to identify potential receptors and pathways for human exposure to the contaminants of concern (COC) that are present at, or migrating from, the Site. The identification of exposure pathways describes the route that the

COC takes to travel from the source to the receptor. An identified pathway indicates that the potential for exposure exists; it does not imply that exposures actually occur.

Data and information reported in the Phase II ESI Report are sufficient to complete a Qualitative Human Health Exposure Assessment (QHHEA) for this project. As part of the VCP process, a QHHEA was performed to determine whether the Site poses an existing or future health hazard to the Site's exposed or potentially exposed population. The sampling data from the RI were evaluated to determine whether there is any health risk under current and future conditions by characterizing the exposure setting, identifying exposure pathways, and evaluating contaminant fate and transport. This QHHEA was prepared in accordance with Appendix 3B and Section 3.3 (b) 8 of the NYSDEC Draft DER-10 Technical Guidance for Site Investigation and Remediation.

Known and Potential Contaminant Sources

Based on the results of the Phase II ESI, the contaminants of concern are:

Soil:

- Chromium, lead, zinc, and metal were detected above their respective Unrestricted Use SCOs only in the shallow soil samples (0'-2'). Of these, only one metal; arsenic was detected at a concentration of 17 mg/kg, slightly exceeding its Restricted Residential Use SCO of 16 mg/kg in one shallow soil sample.

Groundwater:

- Magnesium, manganese and sodium were detected above their respective GQS.

Soil Vapor:

- TCE, PCE, 1,1,1-trichlorethane, and methylene chloride, were detected in sub-slab and soil-vapor samples. However, only methylene chloride exceeded its NYSDOH Air Guidance Value in one sub-slab vapor sample; SV01.

Nature, Extent, Fate and Transport of Contaminants

Soil:

- No SVOCs, PCBs, or Pesticides were detected above their respective Unrestricted Use SCOs in any of the soil samples.
- No metals were detected above their respective Unrestricted Use SCOs in any of the deep soil samples.

- Chromium, lead, zinc, and metal were detected above their respective Unrestricted Use SCOs only in the shallow soil samples (0'-2').

Groundwater:

- No VOCs, SVOCs, PCBs, or pesticides were detected above their GQS in any of the groundwater samples.
- Dissolved metals; magnesium, manganese, and sodium were detected above their respective GQS. They all are found in groundwater throughout NYC.

Soil Vapor:

- TCE, PCE, 1,1,1-trichlorethane, and methylene chloride, were detected in sub-slab and soil-vapor samples. In the absence of indoor air, a conservative comparison of the soil vapor concentrations to the decision matrices was made to evaluate whether soil vapor mitigation may be recommended. When the decision matrices are applied, "no further action" is recommended for all compounds except for methylene chloride. The NYSDOH matrix recommendation for methylene chloride ranges from "no further action" to "mitigate" due to its slight exceedance of matrix value. It should be noted that methylene chloride is a common laboratory contaminant.

Receptor Populations

On-Site Receptors: Lot 13 is developed with a two-story public library with a basement and operated by the NYPL, and portion of the Lot 20 that is part of the Site is developed with an asphalt-paved parking lot. Onsite receptors are limited to trespassers, site representatives and visitors granted access to the property. During construction, potential on-site receptors include construction workers, site representatives, and visitors. Under proposed future conditions, potential on-site receptors include adult and child building residents, workers and visitors.

Off-Site Receptors: Potential off-site receptors within a 500 foot radius of the Site include adult and child residents; commercial and construction workers; pedestrians; and trespassers based on the following land uses within 500 feet of the Site:

1. Commercial Businesses – existing and future

2. Residential Buildings – existing and future
3. Building Construction/ Renovation – existing and future
4. Pedestrians, Trespassers, Cyclists – existing and future
5. Schools – existing and future

Potential Routes of Exposure

Three potential primary routes exist by which chemicals can enter the body: ingestion, inhalation, and dermal absorption. Exposure can occur based on the following potential media:

- Ingestion of groundwater or fill/ soil;
- Inhalation of vapors or particulates; and
- Dermal absorption of groundwater or fill/ soil.

Potential Exposure Points

Current Conditions: The site is currently capped with asphalt and existing building slab there are no potential exposure pathways from ingestion, inhalation, or dermal absorption of soil/ fill. Groundwater is not exposed at the site. The site is served by the public water supply and groundwater is not used at the site for potable supply and there is no potential for exposure.

Construction/ Remediation Conditions: During the remedial action, onsite workers will come into direct contact with surface and subsurface soils as a result of on-Site construction and excavation activities. On-Site construction workers potentially could ingest, inhale or have dermal contact with exposed impacted soil and fill. Similarly, off-Site receptors could be exposed to dust and vapors from on-Site activities. Due to the depth of groundwater, direct contact with groundwater is expected. During construction, on-Site and off-Site exposures to contaminated dust from on-Site will be addressed through the Soil/Materials Management Plan, dust controls, and through the implementation of the Community Air-Monitoring Program and a Construction Health and Safety Plan.

Proposed Future Conditions: Under future remediated conditions, all soils in excess of Track 1 SCOs will be removed. The site will be fully capped, preventing potential direct exposure to soil and groundwater remaining in place, and engineering controls (vapor barrier) will prevent any

potential exposure due to inhalation by preventing soil vapor intrusion. The site is served by the public water supply, and groundwater is not used at the site. There are no plausible off-site pathways for oral, inhalation, or dermal exposure to contaminants derived from the site.

Overall Human Health Exposure Assessment

There are potential complete exposure pathways for the current site condition. There are potential complete exposure pathways that require mitigation during implementation of the remedy. There are no complete exposure pathways under future conditions after the site is developed. This assessment takes into consideration the reasonably anticipated use of the site, which includes a residential structure, site-wide surface cover, and a subsurface vapor barrier system for the building. Additionally, Institutional Control in the form of a deed restriction will inform future owners regarding residual contamination and to follow SMP for any future intrusive work in rear yard areas. Under current conditions, on-Site exposure pathways exist for those with access to the Site and trespassers. During remedial construction, on-Site and off-Site exposures to contaminated dust from historic fill material will be addressed through dust controls, and through the implementation of the Community Air Monitoring Program, the Soil/Materials Management Plan, and a Construction Health and Safety Plan. Potential post-construction use of groundwater is not considered an option because groundwater in this area of New York City is not used as a potable water source. There are no surface waters in close proximity to the Site that could be impacted or threatened.

5.0 Remedial Action Management

5.1 Project Organization and Oversight

Principal personnel who will participate in the remedial action include an OSHA-certified environmental scientist and/or geologist John Driscoll and Matthew Brown. The Professional Engineer (PE) and Qualified Environmental Professionals (QEP) for this project are Ulgur Aydin, P.E., and Ezgi Karayel, QEP.

5.2 Site Security

Site access will be controlled by a NYCDOB approved construction fence.

5.3 Work Hours

The hours for operation of cleanup will comply with the NYC Department of Buildings construction code requirements or according to specific variances issued by that agency. The hours of operation will be conveyed to OER during the pre-construction meeting.

5.4 Construction Health and Safety Plan

The Health and Safety Plan is included in Appendix 5. The Site Safety Coordinator will be determined prior to construction and OER will be notified. Remedial work performed under this RAWP will be in full compliance with applicable health and safety laws and regulations, including Site and OSHA worker safety requirements and HAZWOPER requirements. Confined space entry, if any, will comply with OSHA requirements and industry standards and will address potential risks. The parties performing the remedial construction work will ensure that performance of work is in compliance with the HASP and applicable laws and regulations. The HASP pertains to remedial and invasive work performed at the Site until the issuance of the Notice of Completion.

All field personnel involved in remedial activities will participate in training required under 29 CFR 1910.120, such as 40-hour hazardous waste operator training and annual 8-hour refresher training. Site Safety Officer will be responsible for maintaining workers training records.

Personnel entering any exclusion zone will be trained in the provisions of the HASP and will comply with all requirements of 29 CFR 1910.120. Site-specific training will be provided to field personnel. Additional safety training may be added depending on the tasks performed. Emergency telephone numbers will be posted at the site location before any remedial work begins. A safety meeting will be conducted before each shift begins. Topics to be discussed include task hazards and protective measures (physical, chemical, environmental); emergency procedures; PPE levels and other relevant safety topics. Meetings will be documented in a log book or specific form.

An emergency contact sheet with names and phone numbers is included in the CHASP. That document will define the specific project contacts for use in case of emergency.

5.5 Community Air Monitoring Plan

Real-time air monitoring for volatile organic compounds (VOCs) and particulate levels at the perimeter of the exclusion zone or work area will be performed. Continuous monitoring will be performed for all ground intrusive activities and during the handling of contaminated or potentially contaminated media. Ground intrusive activities include, but are not limited to, soil/waste excavation and handling, test pit excavation or trenching, and the installation of soil borings or monitoring wells.

Periodic monitoring for VOCs will be performed during non-intrusive activities such as the collection of soil and sediment samples or the collection of groundwater samples from existing monitoring wells. Periodic monitoring during sample collection, for instance, will consist of taking a reading upon arrival at a sample location, monitoring while opening a well cap or overturning soil, monitoring during well bailing/purging, and taking a reading prior to leaving a sample location. Depending upon the proximity of potentially exposed individuals, continuous monitoring may be performed during sampling activities. Examples of such situations include groundwater sampling at wells on the curb of a busy urban street, in the midst of a public park, or adjacent to a school or residence. Exceedances of action levels observed during performance of the Community Air Monitoring Plan (CAMP) will be reported to the OER Project Manager and included in the Daily Report.

VOC Monitoring, Response Levels, and Actions

Volatile organic compounds (VOCs) will be monitored at the downwind perimeter of the immediate work area (i.e., the exclusion zone) on a continuous basis during invasive work. Upwind concentrations will be measured at the start of each workday and periodically thereafter to establish background conditions. The monitoring work will be performed using equipment appropriate to measure the types of contaminants known or suspected to be present. The equipment will be calibrated at least daily for the contaminant(s) of concern or for an appropriate surrogate. The equipment will be capable of calculating 15-minute running average concentrations, which will be compared to the levels specified below.

- If the ambient air concentration of total organic vapors at the downwind perimeter of the work area or exclusion zone exceeds 5 parts per million (ppm) above background for the 15-minute average, work activities will be temporarily halted and monitoring continued. If the total organic vapor level readily decreases (per instantaneous readings) below 5 ppm over background, work activities will resume with continued monitoring.
- If total organic vapor levels at the downwind perimeter of the work area or exclusion zone persist at levels in excess of 5 ppm over background but less than 25 ppm, work activities will be halted, the source of vapors identified, corrective actions taken to abate emissions, and monitoring continued. After these steps, work activities will resume provided that the total organic vapor level 200 feet downwind of the exclusion zone or half the distance to the nearest potential receptor or residential/commercial structure, whichever is less - but in no case less than 20 feet, is below 5 ppm over background for the 15-minute average.
- If the organic vapor level is above 25 ppm at the perimeter of the work area, activities will be shutdown.

All 15-minute readings must be recorded and be available for OER personnel to review. Instantaneous readings, if any, used for decision purposes will also be recorded.

Particulate Monitoring, Response Levels, and Actions

Particulate concentrations will be monitored continuously at the upwind and downwind perimeters of the exclusion zone at temporary particulate monitoring stations. The particulate monitoring will be performed using real-time monitoring equipment capable of measuring

particulate matter less than 10 micrometers in size (PM-10) and capable of integrating over a period of 15 minutes (or less) for comparison to the airborne particulate action level. The equipment will be equipped with an audible alarm to indicate exceedance of the action level. In addition, fugitive dust migration should be visually assessed during all work activities.

- If the downwind PM-10 particulate level is 100 micrograms per cubic meter (mcg/m3) greater than background (upwind perimeter) for the 15-minute period or if airborne dust is observed leaving the work area, then dust suppression techniques will be employed. Work will continue with dust suppression techniques provided that downwind PM-10 particulate levels do not exceed 150 mcg/m3 above the upwind level and provided that no visible dust is migrating from the work area.
- If, after implementation of dust suppression techniques, downwind PM-10 particulate levels are greater than 150 mcg/m3 above the upwind level, work will be stopped and a re-evaluation of activities initiated. Work will resume provided that dust suppression measures and other controls are successful in reducing the downwind PM-10 particulate concentration to within 150 mcg/m3 of the upwind level and in preventing visible dust migration.

All readings will be recorded and be available for OER personnel to review.

5.6 Agency Approvals

All permits or government approvals required for remedial construction have been or will be obtained prior to the start of remedial construction. Approval of this RAWP by OER does not constitute satisfaction of these requirements and will not be a substitute for any required permit.

5.7 Site Preparation

Pre-Construction Meeting

OER will be invited to attend the pre-construction meeting at the Site with all parties involved in the remedial process prior to the start of remedial construction activities.

Mobilization

Mobilization will be conducted as necessary for each phase of work at the Site. Mobilization includes field personnel orientation, equipment mobilization (including securing all sampling

equipment needed for the field investigation), marking/staking sampling locations and utility mark-outs. Each field team member will attend an orientation meeting to become familiar with the general operation of the Site, health and safety requirements, and field procedures.

Utility Marker Layouts, Easement Layouts

The presence of utilities and easements on the Site will be fully investigated prior to the performance of invasive work such as excavation or drilling under this plan by using, at a minimum, the One-Call System (811). Underground utilities may pose an electrocution, explosion, or other hazard during excavation or drilling activities. All invasive activities will be performed incompliance with applicable laws and regulations including NYC Building Code to assure safety. Utility companies and other responsible authorities will be contacted to locate and mark the locations, and a copy of the Mark-Out Ticket will be retained by the contractor prior to the start of drilling, excavation or other invasive subsurface operations. Overhead utilities may also be present within the anticipated work zones. Electrical hazards associated with drilling in the vicinity of overhead utilities will be prevented by maintaining a safe distance between overhead power lines and drill rig masts.

Proper safety and protective measures pertaining to utilities and easements, and compliance with all laws and regulations will be employed during invasive and other work contemplated under this RAWP. The integrity and safety of on-Site and off-Site structures will be maintained during all invasive, excavation or other remedial activity performed under the RAWP.

Dewatering

Dewatering is anticipated during remediation and construction. If dewatering fluid is encountered, it will be handled, transported, and disposed of in accordance with all applicable laws and regulations. All required permits will be obtained from NYCDEP prior to any discharge of groundwater into the sewer system.

Equipment and Material Staging

Equipment and materials will be stored and staged in a manner that complies with applicable laws and regulations.

Stabilized Construction Entrance

Steps will be taken to ensure that trucks departing the site will not track soil, fill or debris off-Site. Such actions may include use of cleaned asphalt or concrete pads or use of stone or other aggregate-based egress paths between the truck inspection station and the property exit. Measures will be taken to ensure that adjacent roadways will be kept clean of project related soils, fill and debris.

Truck Inspection Station

An outbound-truck inspection station will be set up close to the Site exit. Before exiting the Site, trucks will be required to stop at the truck inspection station and will be examined for evidence of contaminated soil on the undercarriage, body, and wheels. Soil and debris will be removed. Brooms, shovels and clean water will be utilized for the removal of soil from vehicles and equipment, as necessary.

Extreme Storm Preparedness and Response Contingency Plan

Damage from flooding or storm surge can include dislocation of soil and stockpiled materials, dislocation of site structures and construction materials and equipment, and dislocation of support of excavation structures. Damage from wind during an extreme storm event can create unsafe or unstable structures, damage safety structures and cause downed power lines creating dangerous site conditions and loss of power. In the event of emergency conditions caused by an extreme storm event, the enrollee will undertake the following steps for site preparedness prior to the event and response after the event.

Storm Preparedness

Preparations in advance of an extreme storm event will include the following: containerized hazardous materials and fuels will be removed from the property; loose materials will be secured to prevent dislocation and blowing by wind or water; heavy equipment such as excavators and generators will be removed from excavated areas, trenches and depressions on the property to high ground or removed from the property; an inventory of the property with photographs will be performed to establish conditions for the site and equipment prior to the event; stockpile covers for soil and fill will be secured by adding weights such as sandbags for added security and worn

or ripped stockpile covers will be replaced with competent covers; stockpiled hazardous wastes will be removed from the property; stormwater management systems will be inspected and fortified, including, as necessary: clean and reposition silt fences, hay bales; clean storm sewer filters and traps; and secure and protect pumps and hosing.

Storm Response

At the conclusion of an extreme storm event, as soon as it is safe to access the property, a complete inspection of the property will be performed. A site inspection report will be submitted to OER at the completion of site inspection and after the site security is assessed. Site conditions will be compared to the inventory of site conditions and material performed prior to the storm event and significant differences will be noted. Damage from storm conditions that result in acute public safety threats, such as downed power lines or imminent collapse of buildings, structures or equipment will be reported to public safety authorities via appropriate means such as calling 911. Petroleum spills will be reported to NYS DEC within 2 hours of identification and consistent with State regulations. Emergency and spill conditions will also be reported to OER. Public safety structures, such as construction security fences will be repaired promptly to eliminate public safety threats. Debris will be collected and removed. Dewatering will be performed in compliance with existing laws and regulations and consistent with emergency notifications, if any, from proper authorities. Eroded areas of soil including unsafe slopes will be stabilized and fortified. Dislocated materials will be collected and appropriately managed. Support of excavation structure will be inspected and fortified as necessary. Impacted stockpiles will be contained and damaged stockpile covers will be replaced. Stormwater control systems and structures will be inspected and maintained as necessary. If soil or fill materials are discharged off site to adjacent properties, property owners and OER will be notified and corrective measure plan designed to remove and clean dislocated material will be submitted to OER and implemented following approval by OER and granting of site access by the property owner. Impacted offsite areas may require characterization based on site conditions, at the discretion of OER. If onsite petroleum spills are identified, a qualified environmental professional will determine the nature and extent of the spill and report to NYS DEC's spill hotline at DEC 800-457-7362 within statutory defined timelines. If the source of the spill is

ongoing and can be identified, it should be stopped if this can be done safely. Potential hazards will be addressed immediately, consistent with guidance issued by NYS DEC.

Storm Response Reporting

A site inspection report will be submitted to OER at the completion of site inspection. An inspection report established by OER is available on OER's website (www.nyc.gov/oer) and will be used for this purpose. Site conditions will be compared to the inventory of site conditions and material performed prior to the storm event and significant differences will be noted. The site inspection report will be sent to the OER project manager and will include the site name, address, tax block and lot, site primary and alternate contact name and phone number. Damage and soil release assessment will include: whether the project had stockpiles; whether stockpiles were damaged; photographs of damage and notice of plan for repair; report of whether soil from the site was dislocated and whether any of the soil left the site; estimates of the volume of soil that left the site, nature of impact, and photographs; description of erosion damage; description of equipment damage; description of damage to the remedial program or the construction program, such as damage to the support of excavation; presence of onsite or offsite exposure pathways caused by the storm; presence of petroleum or other spills and status of spill reporting to NYS DEC; description of corrective actions; schedule for corrective actions. This report should be completed and submitted to OER project manager with photographs within 24 hours of the time of safe entry to the property after the storm event.

5.8 Traffic Control

Drivers of trucks leaving the Site with soil/fill will be instructed to proceed without stopping in the vicinity of the Site to prevent neighborhood impacts. The planned route on local roads for trucks leaving the site is shown on Figure 8.

5.9 Demobilization

Demobilization will include:

- As necessary, restoration of temporary access areas and areas that may have been disturbed to accommodate support areas (e.g., staging areas, decontamination areas, storage areas, temporary water management areas, and access area);

- Removal of sediment from erosion control measures and truck wash and disposal of materials in accordance with applicable laws and regulations;
- Equipment decontamination, and;
- General refuse disposal.

Equipment will be decontaminated and demobilized at the completion of all field activities. Investigation equipment and large equipment (e.g., soil excavators) will be washed at the truck inspection station as necessary. In addition, all investigation and remediation derived waste will be appropriately disposed.

5.10 Reporting and Record Keeping

Daily reports

Daily reports providing a general summary of activities for each day of active remedial work will be emailed to the OER Project Manager by the end of the following business day. Those reports will include:

- Project number and statement of the activities and an update of progress made and locations of excavation and other remedial work performed;
- Quantities of material imported and exported from the Site;
- Status of on-Site soil/fill stockpiles;
- A summary of all citizen complaints, with relevant details (basis of complaint; actions taken; etc.);
- A summary of CAMP results noting all excursions. CAMP data may be reported;
- Photograph of notable Site conditions and activities.

The frequency of the reporting period may be revised in consultation with OER project manager based on planned project tasks. Daily email reports are not intended to be the primary mode of communication for notification to OER of emergencies (accidents, spills), requests for changes to the RAWP or other sensitive or time critical information. However, such information will be included in the daily reports. Emergency conditions and changes to the RAWP will be communicated directly to the OER project manager by personal communication. Daily reports will be included as an Appendix in the Remedial Action Report.

Record Keeping and Photo Documentation

Job-site record keeping for all remedial work will be performed. These records will be maintained on-Site during the project and will be available for inspection by OER staff. Representative photographs will be taken of the Site prior to any remedial activities and during major remedial activities to illustrate remedial program elements and contaminant source areas. Photographs will be submitted at the completion of the project in the RAR in digital format (i.e. jpeg files).

5.11 Complaint Management

All complaints from citizens will be promptly reported to OER. Complaints will be addressed, and outcomes will also be reported to OER in daily reports. Notices to OER will include the nature of the complaint, the party providing the complaint, and the actions taken to resolve any problems.

5.12 Deviations From The Remedial Action Work Plan

All changes to the RAWP will be reported to, and approved by, the OER Project Manager and will be documented in daily reports and reported in the Remedial Action Report. The process to be followed if there are any deviations from the RAWP will include a request for approval for the change from OER noting the following:

- Reasons for deviating from the approved RAWP;
- Effect of the deviations on overall remedy; and
- Determination with basis that the remedial action with the deviation(s) is protective of public health and the environment.

6.0 Remedial Action Report

A Remedial Action Report (RAR) will be submitted to OER following implementation of the remedial action defined in this RAWP. The RAR will document that the remedial work required under this RAWP has been completed and has been performed in compliance with this plan. The RAR will include:

- Information required by this RAWP;
- Text description with thorough detail of all engineering and institutional controls (if Track 1 remedial action is not achieved)
- As-built drawings for all constructed remedial elements;
- Manifests for al soil or fill disposal;
- Photographic documentation of remedial work performed under this remedy;
- Site Management Plan (if Track 1 remedial action is not achieved);
- Description of any changes in the remedial action from the elements provided in this RAWP and associated design documents;
- Tabular summary of all end point sampling results (including all soil test results from the remedial investigation for soil that will remain on site) and all soil/fill waste characterization results, QA/QC results for end-point sampling, and other sampling and chemical analysis performed as part of the remedial action;
- Test results or other evidence demonstrating that remedial systems are functioning properly;
- Account of the source area locations and characteristics of all soil or fill material removed from the Site including a map showing the location of these excavations and hotspots, tanks or other contaminant source areas;
- Full accounting of the disposal destination of all contaminated material removed from the Site. Documentation associated with disposal of all material will include transportation and disposal records, and letters approving receipt of the material;
- Account of the origin and required chemical quality testing for material imported onto the Site;

- Recorded Declaration of Covenants and Restrictions. OR Continue registration of the property with an E-Designation by the NYC Department of Buildings (if Track 1 remedial action is not achieved);
- The RAWP and Remedial Investigation Report will be included as appendices to the RAR;
- Reports and supporting material will be submitted in digital form and final PDF's will include bookmarks for each appendix.

Remedial Action Report Certification

I, Hilmi Ulgur Aydin, certify the following:

- I am currently a registered professional engineer licensed by the State of New York.
- I performed professional engineering services and had primary direct responsibility for implementation of the remedial program for the Eliza (4790 Broadway, New York, NY) site, site number 18TMP1075M.
- I have reviewed this document, to which my signature and seal are affixed.
- The vapor barrier system and composite cover system implemented as part of construction during this remedial action were designed by me or a person under my direct supervision and achieve the goals established in the Remedial Action Work Plan for this site.
- The vapor barrier, and composite cover system implemented as part of construction] constructed during this remedial action were professionally observed by me or by a person under my direct supervision are accurately reflected in the text and drawings for as-built design reported in this Remedial Action Report.
- The OER-approved Remedial Action Work Plan dated [date] and Stipulations in a letter dated [date] were implemented and that all requirements in those documents have been substantively complied with. I certify that contaminated soil, fill, liquid or other material from the property was taken to facilities licensed to accept this material in full compliance with applicable laws and regulations.

Name

PE License Number

Signature

Date

PE Stamp

I, Ezgi Karayel, certify the following:

- I am a Qualified Environmental Professional. I had primary direct responsibility for implementation of the remedial program for the Eliza (4790 Broadway, New York, NY) site, site number 18TMP1075M.
- The OER-approved Remedial Action Work Plan dated [date] and Stipulations in a letter dated [date] were implemented and that all requirements in those documents have been substantively complied with. I certify that contaminated soil, fill, liquid or other material from the property was taken to facilities licensed to accept this material in full compliance with applicable laws and regulations.

QEP Name

QEP Signature

Date

7.0 Schedule

The table below presents a schedule for the proposed remedial action and reporting. If the schedule for remediation and development activities changes, it will be updated and submitted to OER. Currently, a four to five-month remediation period is anticipated.

Schedule Milestone	**Weeks from Remedial Action Start**	**Duration (weeks)**
OER Approval of RAWP	-	-
Fact Sheet 2 announcing start of remedy	-	-
Mobilization	1	1
Remedial Excavation	2	8-10
Engineering Control Installation	12	2
Demobilization	14	1
Record Declaration of Covenants and Restrictions	15	1
Submit Remedial Action Report	16	4

FIGURES

vEKtor consultants

t: +1.347.871.0750
f: +1.347.402.7735
e: info@vektorconsultants.com
www.vektorconsultants.com

Approximate Site Boundary

Base map provided by Google

Scale:

0 500' 1000'

Figure No.	1
Figure Name:	Site Location Map
Report:	Remedial Action Work Plan
Date:	3/27/19
Drawn By:	EK
Site Address:	4790 Broadway New York, New York

vEKtor consultants

t: +1.347.871.0750
f: +1.347.402.7735
e: info@vektorconsultants.com
www.vektorconsultants.com

- One and Two Family Buildings
- Multi-Family Walk-Up Buildings
- Multi-Family Elevator Buildings
- Mixed Residential and Commercial Buildings
- Commercial and Office Buildings
- Industrial and Manufacturing
- Transportation and Utility
- Public Facilities and Institutions
- Open Space and Outdoor Recreation
- Parking Facilities
- Vacant Land
- Other
- Mandatory Inclusionary Housing Areas
- Site Boundary

Base map provided by NYC Planning

Scale:

0 200' 400'

Figure No.	2
Figure Name:	Site Boundary and Surrounding Use Map
Report:	Remedial Action Work Plan
Date:	3/27/19
Drawn By:	EK
Site Address:	4790 Broadway New York, New York

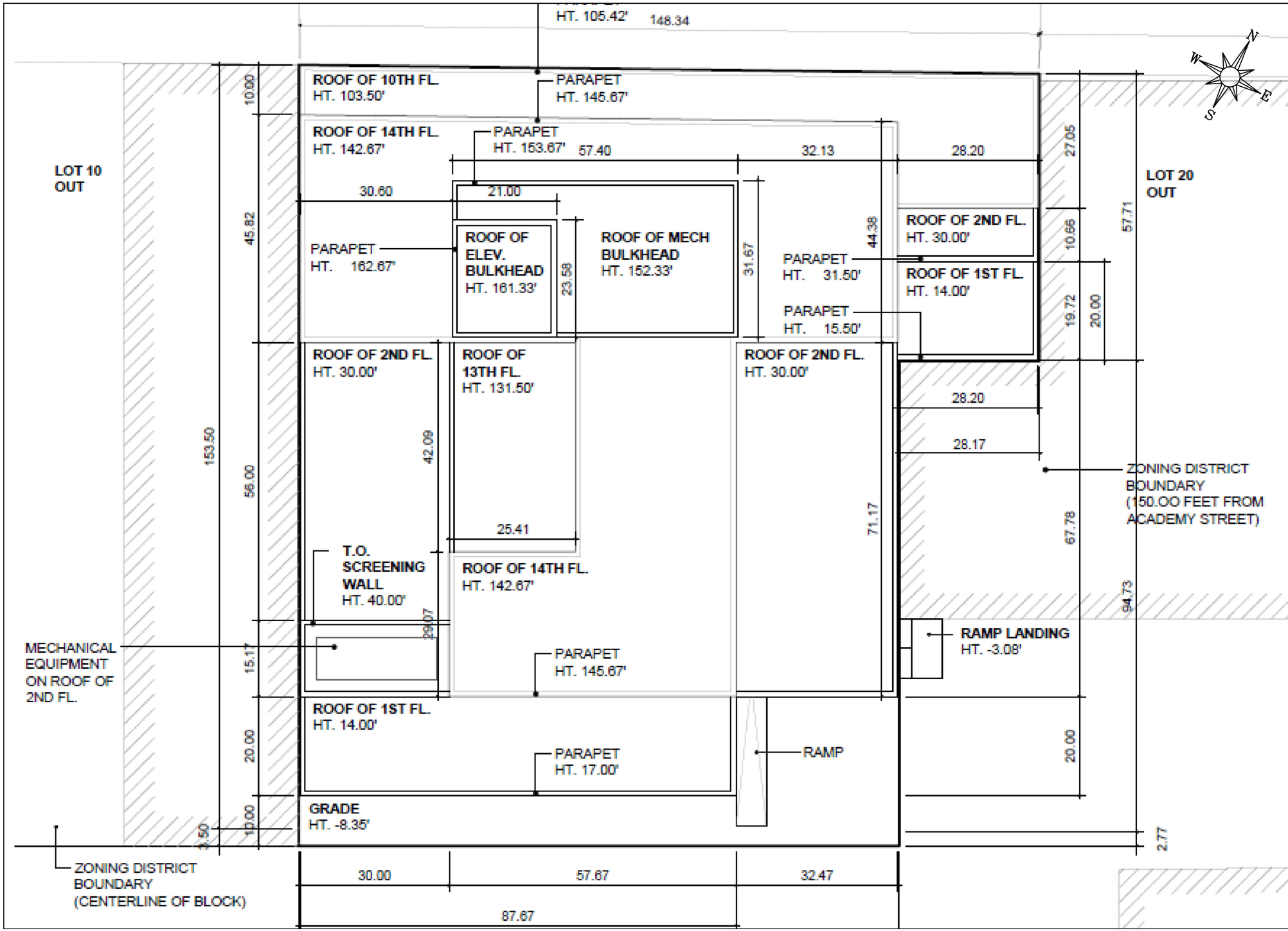

vEKtor consultants

t: +1.347.871.0750
f: +1.347.402.7735
e: info@vektorconsultants.com
www.vektorconsultants.com

Notes:

1. Base Map provided by Fogarty Finger Architecture (A-011.00 Site Plan)

Scale: 1/16" = 1'-0"

Figure No.	3
Figure Name:	Proposed Redevelopment Plan
Report:	Remedial Action Work Plan
Date:	3/27/19
Drawn By:	EK
Site Address:	4790 Broadway New York, New York

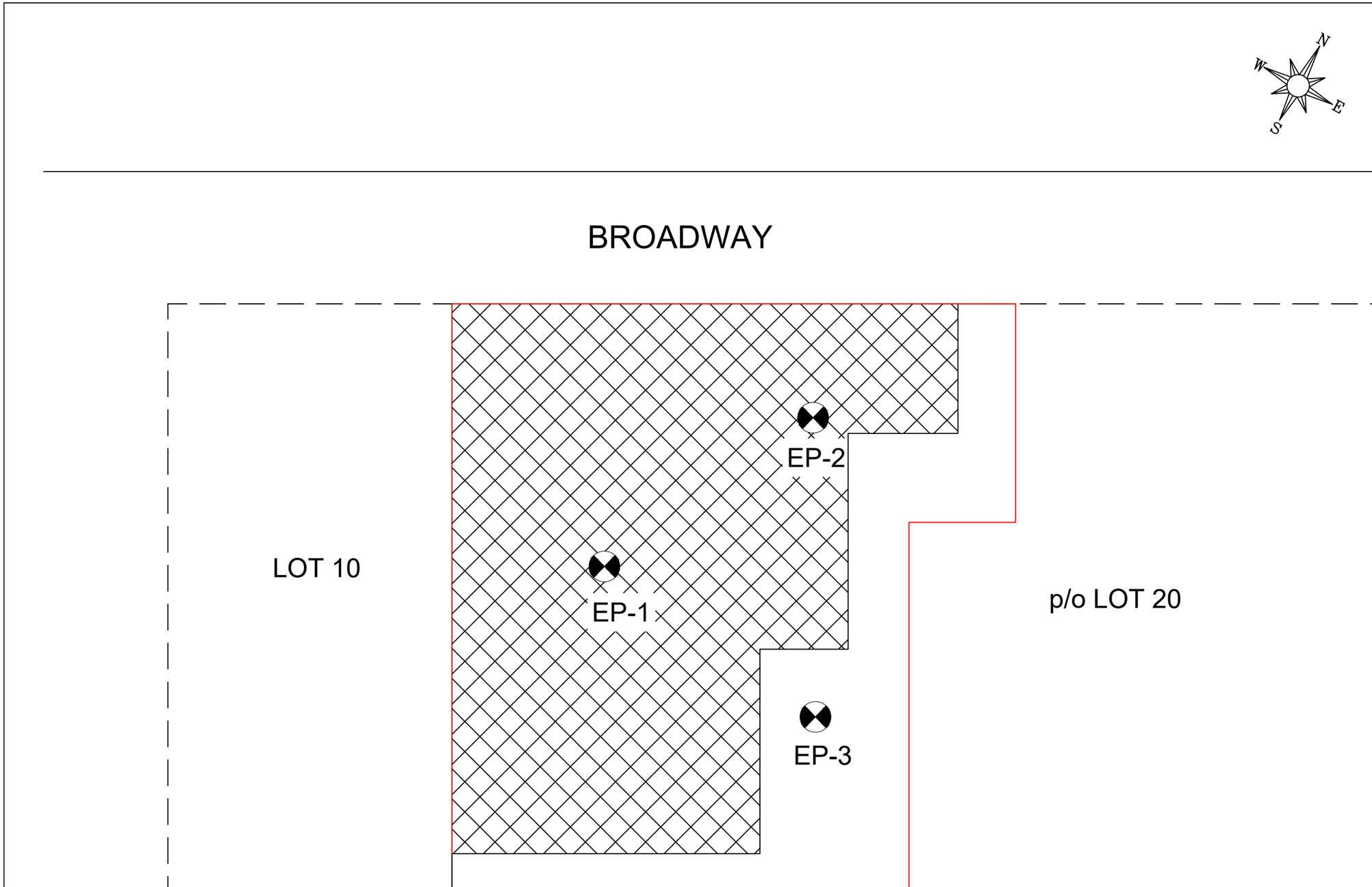

vEKtor consultants
t: +1.347.871.0750
f: +1.347.402.7735
e: info@vektorconsultants.com
www.vektorconsultants.com

Legend:

- Site Boundary
- Cellar Boundary
- Proposed Endpoint Sample Locations and Designated ID

Notes:

1. All feature locations are approximate

Scale:

0 25 50

Figure No.	4
Figure Name:	Proposed Endpoint Sampling Plan
Report:	Remedial Action Work Plan
Date:	4/23/19
Drawn By:	EK
Site Address:	4790 Broadway NewYork, New York

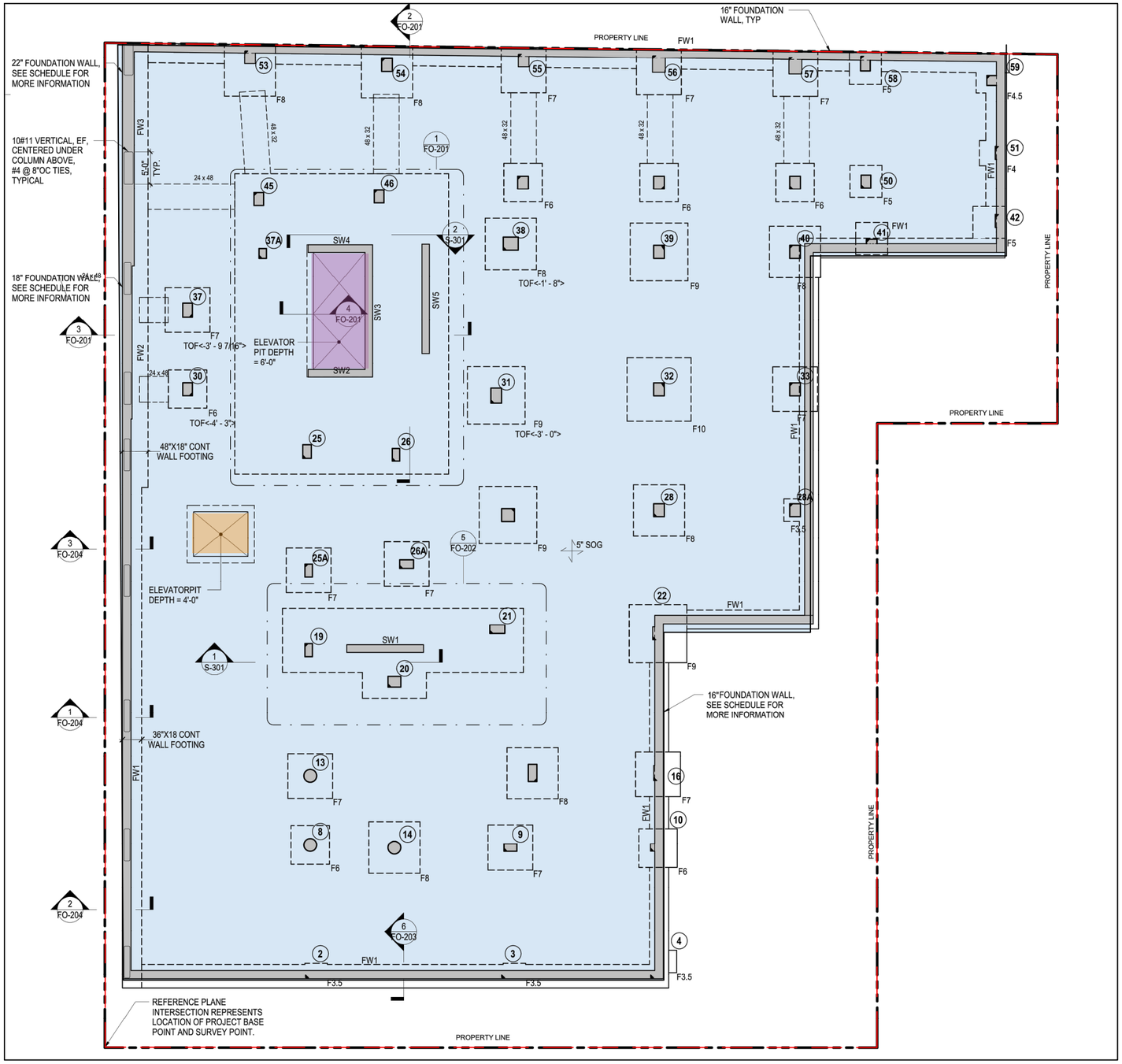

vEKtor consultants

t: +1.347.871.0750
f: +1.347.402.7735
e: info@vektorconsultants.com
www.vektorconsultants.com

Legend:

- Site Boundary
- Excavation to ~ 12'-6" feet below grade
- Excavation to ~ 18'-6" feet below grade
- Excavation to ~ 16'-6" feet below grade

Notes:

1. Base Map provided by Fogarty Finger Architecture (FO-100.00 Foundation Plan)

Scale:

Not to Scale

Figure No.	5
Figure Name:	Proposed Excavation Plan
Report:	Remedial Action Work Plan
Date:	3/27/19
Drawn By:	EK
Site Address:	4790 Broadway New York, New York

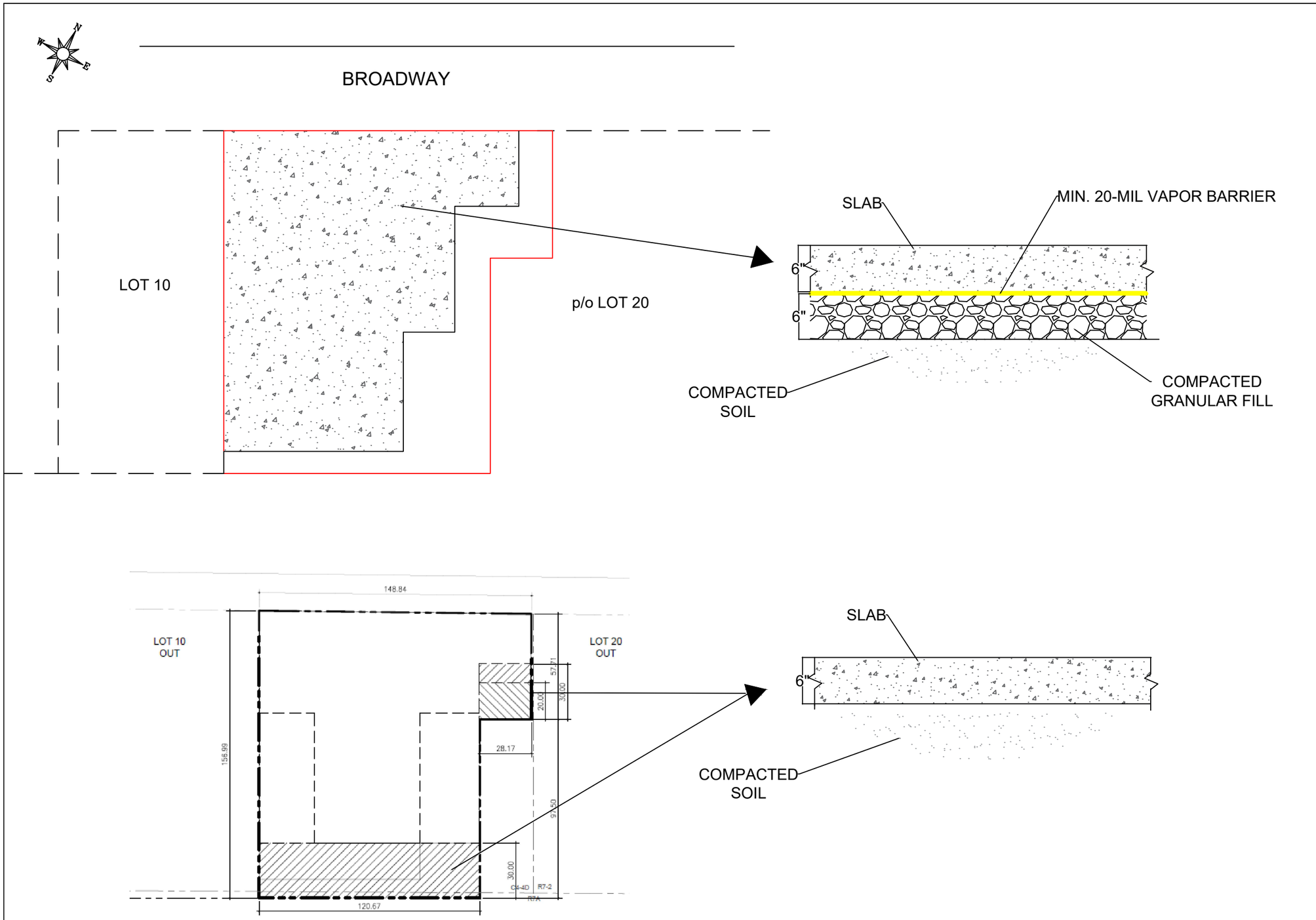

vEKtor consultants

t: +1.347.871.0750
f: +1.347.402.7735
e: info@vektorconsultants.com
www.vektorconsultants.com

Legend:

- Site Boundary
- Cellar Boundary
- New Cellar and Composite Cover Location
- Paved Rear Yards and Composite Cover System

Scale:
Not to Scale

Figure No.	6
Figure Name:	Composite Cover System Design and Location
Report:	Remedial Action Work Plan
Date:	4/23/19
Drawn By:	EK
Site Address:	4790 Broadway New York, New York

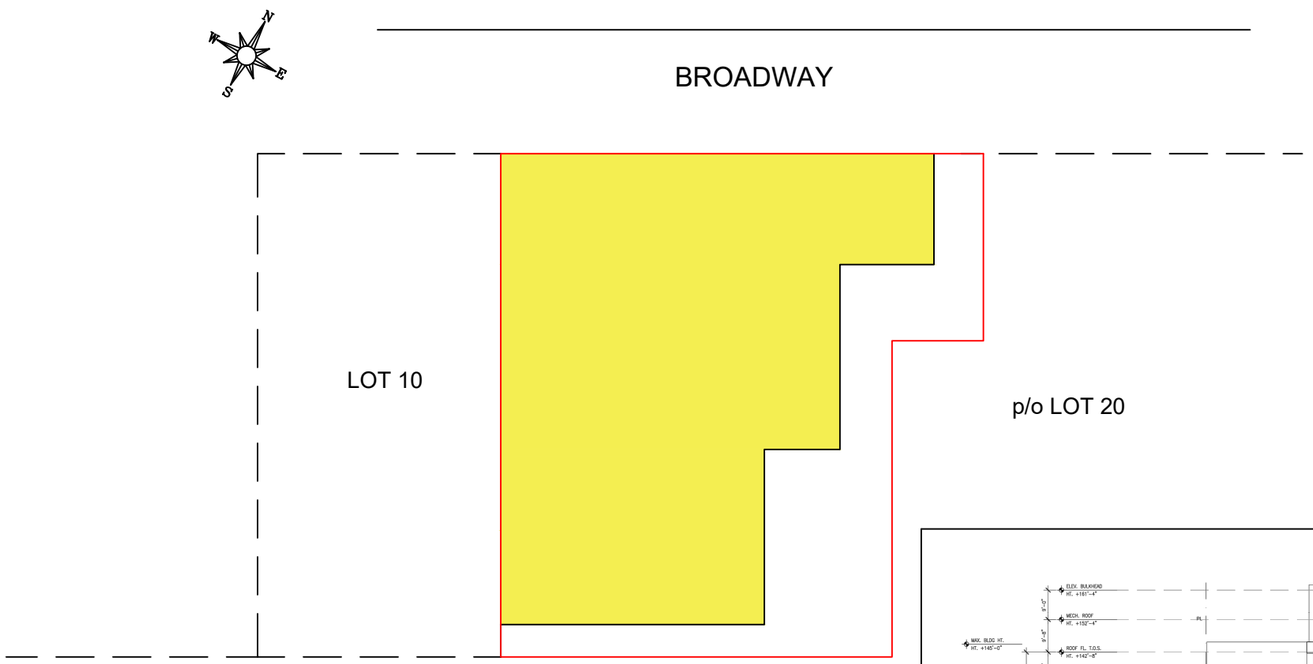

vEKtor consultants

t: +1.347.871.0750
f: +1.347.402.7735
e: info@vektorconsultants.com
www.vektorconsultants.com

Legend:

Vapor Barrier Location

Notes:

1. Proposed vapor barrier is 20-mil Stego-Wrap manufactured by Stego Industries or approved equal

Scale:
Not to Scale

Figure No.	7
Figure Name:	Vapor Barrier System Design and Location
Report:	Remedial Action Work Plan
Date:	3/27/19
Drawn By:	EK
Site Address:	4790 Broadway New York, New York

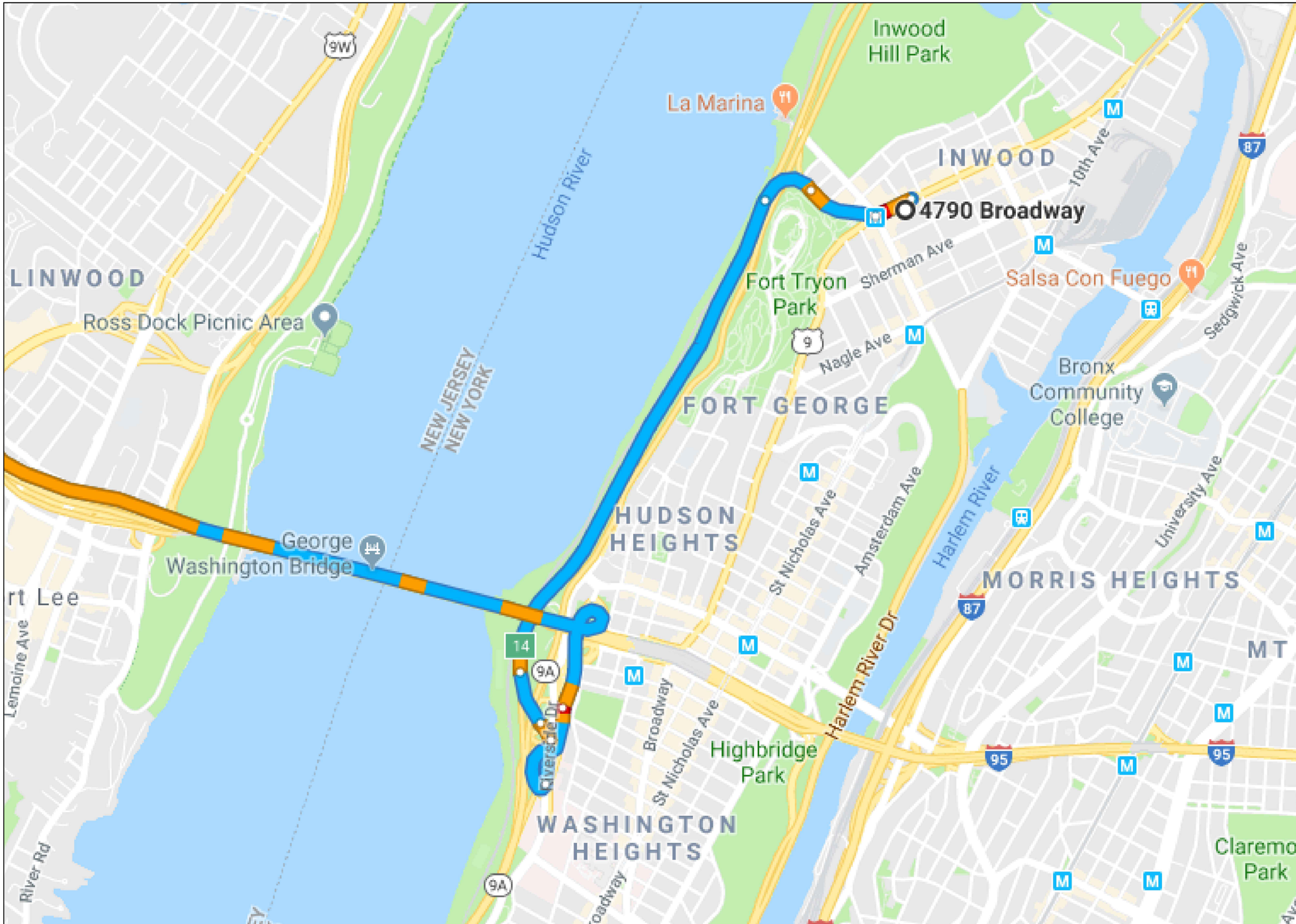

vEKtor consultants

t: +1.347.871.0750
f: +1.347.402.7735
e: info@vektorconsultants.com
www.vektorconsultants.com

Potential Truck Route to New Jersey

Base map provided by Google

Scale:
Not to Scale

Figure No.	8
Figure Name:	Truck Route
Report:	Remedial Action Work Plan
Date:	3/27/19
Drawn By:	EK
Site Address:	4790 Broadway New York, New York

APPENDICES

APPENDIX 1

PROPOSED DEVELOPMENT PLANS

THE ELIZA

4790 BROADWAY, MANHATTAN, NY

NEW MIXED-USE DEVELOPMENT

DESIGN DEVELOPMENT ISSUANCE

BUILDING LIMITATIONS		
	CATEGORY	CRITERIA
1.	APPLICABLE BUILDING CODES:	NEW YORK CITY CONSTRUCTION CODES 2014 ANSI 117.1.2009 ADA GUIDELINES 2010 NY STATE MULTI DWELLING LAW FAIR HOUSING ACT
2.	BUILDING OCCUPANCY	GROUP R-2: APARTMENTS GROUP A-3: COMMUNITY FACILITY GROUP A-4: COMMUNITY FACILITY GROUP B: LIBRARY GROUP E: PRE-K
3.	CONSTRUCTION CLASSIFICATION	TYPE 1B
4.	HEIGHT LIMITATIONS, GROUP R-2, CONSTRUCTION TYPE 1B	UNLIMITED STORIES. BUILDING EQUIPPED WITH APPROVED AUTOMATIC SPRINKLER SYSTEM. PROPOSED BUILDING HEIGHT 142.25' PROPOSED HEIGHT IN STORIES 14 PROPOSED FLOOR AREA 144,777 SF
		COLUMNS SUPPORTING FLOOR SHALL BE CONSTRUCTED TO MEET TYPE 1B CONSTRUCTION
5.	FIRE RESISTANCE RATING REQUIREMENT	SEE BELOW
	CONSTRUCTION ELEMENT	RATING IN HOURS
	STRUCTURAL FRAMING (INC. COLUMNS, GIRDERS, TRUSSES)	2
	BEARING WALLS _ EXTERIOR BEARING WALLS _ INTERIOR	2 2
	NON-BEARING WALLS & PARTITIONS_EXTERIOR	SEE TABLE 602
	(a) ROOF SUPPORTS: FIRE RESISTANCE RATINGS OF STRUCTURAL FRAME AND BEARING WALLS ARE PERMITTED TO BE REDUCED BY 1 HOUR WHERE SUPPORTING ROOF ONLY.	
	NONBEARING WALLS & PARTITIONS_INTERIOR	0
	FLOOR CONSTRUCTION INCLUDING SUPPORTING BEAMS	2
	ROOF CONSTRUCTION INCLUDING SUPPORTING BEAMS	1
	SHAFT ENCLOSURE	2
6.	SPRINKLERS	FULLY SPRINKLERED ALL FLOORS
7.	INTERIOR FINISH CLASS	
	VERTICAL EXITS AND EXIT PASSAGE WAYS	CLASS B
	EXIT ACCESS CORRIDORS	CLASS B
	ROOMS AND ENCLOSED SPACES	CLASS C (R2) CLASS C (A3) CLASS C (A4)

1 GENERAL BUILDING DATA
SCALE: N.T.S.

1. ALL CONSTRUCTION TO BE IN ACCORDANCE WITH THE RULES AND REGULATIONS OF THE NEW YORK CITY BUILDING CODE. ALL ASSEMBLIES AND EQUIPMENT TO BE AS ACCEPTED BY THE N.Y.C. BOARD OF STANDARDS AND APPEALS. MECHANICAL EQUIPMENT TO BE MEA APPROVED.
2. ALL WORK PERFORMED IN ACCORDANCE TO THE FOLLOWING CODES BUT NOT LIMITED TO 2014 BUILDING CODE, 2014 NYC PLUMBING CODE, 2014 NYC MECHANICAL CODE, 2014 NYC FUEL AND GAS CODE, 2014 NYC FIRE CODE, 2011 NYC ELECTRICAL CODE- LL39/11, 2016 NYC ENERGY CONSERVATION CODE, ICC/ANSI A117.1-1-2009)
3. MATERIALS REQUIRING FIRE-RESISTANCE RATINGS AND FIRE TESTS TO CONFORM WITH NYC TITLE 28 SECTION BC 703.
4. DOORS AND ASSEMBLIES SHALL HAVE FIRE-RESISTIVE RATINGS PER SECTION 27-371. ALL FIRE RATED DOORS SHALL BEAR A LABEL INDICATING SAME TYPE AS APPROVED BY BOARD OF STANDARDS AND APPEALS OR M.E.A.
5. EXIT LIGHTS AND SIGNS SHALL BE PROVIDED AT ALL REQUIRED EXITS AND PASSAGES WITH CENTRAL BATTERY SYSTEM SIZED TO SUPPLY 90 MINUTES OF EGRESS LIGHTING AS PER ADA AND BC 1011 - 28.2-1011.5.3
6. KEY PLAN SHOWN ON THIS SHEET TO BE USED FOR GENERAL PROPERTY FAMILIARIZATION ONLY. ALL LEGAL PROPERTY IMPEDIMENTS TO BE ADDRESSED TO THE OWNER.
7. SUSPENDED CEILING SYSTEM SHALL CONSIST OF SUPPORTING RUNNERS CARRYING CHANNELS AND A SUPPORTING GRID AND SHALL COMPLY WITH SECTION 27-350 AND RS 5-16 FOR CLASS 1 FIREPROOF CONSTRUCTION.
8. ALL INTERIOR WALL AND CEILING FINISHES SHALL COMPLY WITH SECTION BC 803.
9. THE CONTRACTOR SHALL BECOME FAMILIAR WITH REQUIREMENTS OF BC CHAPTER 33 SECTION BC 3301, "SAFEGUARDS DURING CONSTRUCTION OR DEMOLITION"
10. THE CONTRACTOR SHALL BE RESPONSIBLE FOR SECURING OF ALL PERMITS.
11. THE CONTRACTOR SHALL BE PRESENT AT FINAL INSPECTION WITH BUILDING DEPARTMENT INSPECTOR.
12. THE PERMIT HOLDER SHALL NOTIFY THE DEPARTMENT VIA PHONE OR ELECTRONICALLY AT LEAST 24 HOURS BUT NO MORE THAN 48 HOURS PRIOR TO THE COMMENCEMENT OF WORK AS PER 28.2-3306.3.1
13. ALL FIRE STOPPING AT PENETRATIONS IN FIRE RATED FLOOR AND WALL SEPARATIONS SHALL BE RATED AT TWO (2) OR THREE (3) HOURS (AS REQUIRED) IN COMPLIANCE WITH REFERENCE STANDARD RS 5-19 OF THE N.Y.C. BLDG. CODE.
14. PROJECT SHALL COMPLY WITH LOCAL LAW 58/87 AND ADA ACCESSIBILITY GUIDELINES.
15. EGRESS PROVISIONS TO COMPLY WITH TABLE 6-1.
16. ALL WOOD SHALL BE FIRE RETARDANT TREATED AS PER SECTION 27-328, RS 5-3 AND RS 5-4, AND BE TESTED AS PER SECTION 27-322.
17. WHERE GLASS IS USED, GLASS SHALL COMPLY WITH SECTIONS 27-643 TO 27-651 AND RS 10-67 & 10-68.
18. FIRE EXTINGUISHERS AND FIRE PROTECTION SHALL BE PROVIDED AT ALL TIMES DURING CONSTRUCTION OPERATIONS, READY ACCESS TO ALL FIRE HYDRANTS AND TO OUTSIDE CONNECTIONS FOR STANDPIPES, SPRINKLERS OR OTHER FIRE EXTINGUISHING EQUIPMENT SHALL BE PROVIDED AND MAINTAINED AND NO MATERIAL OR EQUIPMENT SHALL BE PLACED WITHIN FIVE (5) FEET OF SUCH HYDRANT OR CONNECTION. WHEN BUILDINGS EXCEED 3 STORIES, A SAFE INTERIOR STAIRWAY OR LADDER LOCATED IN EACH STAIR-WELL AND PROPERLY SECURED AT TOP AND BOTTOM SHALL BE MAINTAINED. AS PER II-3-02(e)(4)(i).
19. THE ARCHITECT HAS NOT BEEN RETAINED FOR SUPERVISION OF CONSTRUCTION AND ASSUMES NO RESPONSIBILITY FOR MEANS AND METHODS OF CONSTRUCTION.
20. HIGH RISE BUILDINGS SHOULD COMPLY WITH SECTIONS 403.2 THROUGH 403.8

2 BUILDING DEPARTMENT NOTES
SCALE: N.T.S.

3 PERSPECTIVAL VIEW FROM NORTHWEST
SCALE: N.T.S.

ADDRESS: 4790 BROADWAY,MANHATTAN, NY 10034
TAX BLOCK: 2233
TAX LOT: 13 & 20

ZONING MAP: 9A
ZONING DISTRICT: R7A & C4-4D/R8A

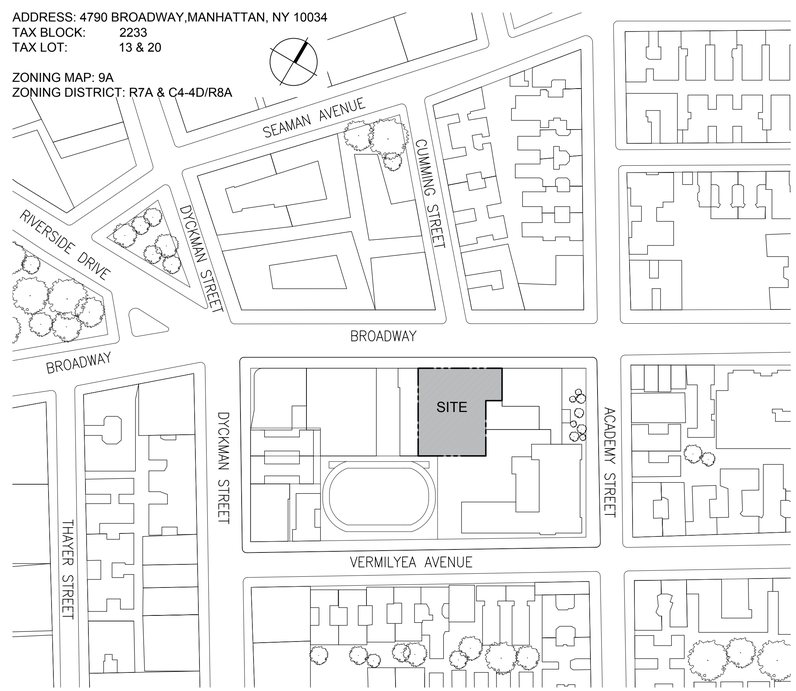

4 AREA PLAN
SCALE: 1/128" = 1'-0"

Client:
RANGER PROPERTIES
4790 BROADWAY
NEW YORK, NY 10034

Architect:
FOGARTY FINGER
architecture | interiors
69 Walker St, New York, NY 10013
t 212 966 7450 f 212 966 7444

Structural:
Thornton Tomasetti
51 Madison Avenue
New York, NY 10010
Tel 917.661.7800

MEP / FP:
Concessi Engineering, PC
499 7th Avenue, 11th Floor South Tower
New York, NY 10018
Tel 212.629.6810

GEOTECH:
FNA Engineering Services, PC
670 Bergen Boulevard, Floor 2
Ridgefield, NJ 07657
Tel 201.241.2444

FACADE:
Simpson Gumpertz & Heger
550 7th Avenue, 10th Floor
New York, NY 10018
Tel 212.271.7000

CODE:
Metropolis
22 Courtland Street, 10th Floor
New York, NY 10007
Tel 212.233.6344

No.	Date	Issue
02	02.06.2019	DD ESTIMATING
01	11.20.2018	SCHEMATIC DESIGN

Project:
4790 BROADWAY
NEW YORK, NY 10034

Drawing Title:
TITLE SHEET

Seal & Signature:

DATE (MM-DD-YY): 02-05-2019
PROJECT No.:
DRAWING BY: --
CHK BY: --
DWG. No.: T-001.00
CADD FILE No.:

DESIGN DEVELOPMENT SUBMISSION DRAWING LIST | 4790 BROADWAY, INWOOD

PROJECT INFORMATION

DRAWING NUMBER	DRAWING DESCRIPTION
T-001.00	TITLE SHEET

GENERAL

G-000.00	DRAWING INDEX
G-001.00	ACCESSIBILITY REQUIREMENTS
G-002.00	ABBREVIATIONS, SYMBOLS & LEGENDS
G-003.00	GENERAL NOTES & DOB REQUIREMENTS
G-004.00	FLOOD ZONE MAPS

ZONING

Z-001.00	ZONING ANALYSIS & AREA CALCULATIONS
Z-002.00	ZONING DIAGRAMS
Z-003.00	AXONOMETRICS, SECTIONS & SURVEY
Z-004.00	ZONING DECUCTIONS
Z-005.00	ZONING DEDUCTIONS
Z-006.00	ZONING DEDUCTIONS
Z-007.00	ZONING DEDUCTIONS
Z-008.00	INCLUSIONARY HOUSING ANALYSIS

ENERGY ANALYSIS

EN-001.00	FACADE CALCULATIONS
EN-002.00	AIR BARRIER DIAGRAMS
EN-003.00	TYPICAL WALL ASSEMBLY TYPES

BUILDERS PAVEMENT PLAN

BPP-001.00	

LIFE SAFETY

A-001.00	LIFE SAFETY PLAN CELLAR & GROUND
A-002.00	LIFE SAFETY PLAN LEVELS 2 & 3
A-003.00	LIFE SAFETY PLAN LEVELS 4-13
A-004.00	LIFE SAFETY PLAN LEVELS 14 & ROOF

ARCHITECTURE PLANS

A-010.00	SURVEY
A-011.00	SITE PLAN
A-012.00	RENDERINGS
A-100.00	CELLAR PLAN
A-101.00	GROUND FLOOR PLAN
A-102.00	2ND FLOOR PLAN
A-103.00	3RD FLOOR PLAN
A-104.00	4TH - 10TH FLOORS PLAN
A-105.00	11TH - 13TH FLOORS PLAN
A-106.00	14TH FLOOR PLAN
A-107.00	ROOF PLAN
A-108.00	ELEVATOR BULKHEAD PLAN

UNIT PLANS

A-150.00	UNIT TYPE PLANS
A-151.00	UNIT TYPE PLANS
A-152.00	UNIT TYPE PLANS
A-153.00	UNIT TYPE PLANS
A-154.00	UNIT TYPE PLANS
A-155.00	UNIT TYPE PLANS

BLDG ELEVATIONS/SECTIONS

A-201.00	NORTH ELEVATION
A-202.00	EAST ELEVATION
A-203.00	SOUTH ELEVATION
A-204.00	WEST ELEVATION & OTHERS
A-205.00	BULKHEAD ELEVATIONS

BUILDING SECTIONS

A-301.00	BUILDING SECTION: NORTH - SOUTH
A-302.00	BUILDING SECTION: WEST - EAST

EXTERIOR ENVELOPE

A-401.00	WALL SECTIONS
A-402.00	EXTERIOR DETAILS
A-403.00	EXTERIOR DETAILS
A-404.00	ENLARGED EXTERIOR WALL DRAWINGS
A-441.00	TYPICAL BRICK DETAILS
A-442.00	TYPICAL BRICK DETAILS
A-443.00	EXTETIOR WALL DETAILS
A-444.00	TYPICAL EIFS DETAILS
A-445.00	TYPICAL EIFS DETAILS

VERTICAL CIRCULATION

A-500.00	ENLARGED CORE & STAIR PLAN I
A-501.00	ENLARGED CORE & STAIR PLAN II
A-502.00	ENLARGED CORE & STAIR SECTIONS
A-503.00	ENLARGED STAIR SECTIONS
A-504.00	ENLARGED RAMP PLAN & SECTIONS
A-505.00	ENLARGED STAIR SECTIONS
A-506.00	ELEVATOR & TRASH CHUTE PLAN & SECTION
A-507.00	ELEVATOR SECTIONS

REFLECTED CEILING PLANS

A-600.00	REFLECTED CEILING PLAN CELLAR FLOOR
A-601.00	REFLECTED CEILING PLAN 1ST FLOOR
A-602.00	REFLECTED CEILING PLAN 2ND FLOOR
A-603.00	REFLECTED CEILING PLAN 3RD FLOOR
A-604.00	REFLECTED CEILING PLAN 4TH - 10TH FLOOR
A-605.00	REFLECTED CEILING PLAN 11TH - 13TH FLOOR
A-606.00	REFLECTED CEILING PLAN 14TH FLOOR
A-607.00	REFLECTED CEILING PLAN ROOF

ACCESSIBILITY DETAIL DRAWINGS

A-800.00	KITCHEN PLANS & ELEVATIONS
A-801.00	KITCHEN PLANS & ELEVATIONS
A-802.00	KITCHEN PLANS & ELEVATIONS
A-803.00	KITCHEN PLANS & ELEVATIONS
A-804.00	KITCHEN PLANS & ELEVATIONS
A-805.00	KITCHEN PLANS & ELEVATIONS
A-810.00	BATHROOM PLANS & ELEVATIONS
A-811.00	BATHROOM PLANS & ELEVATIONS
A-812.00	BATHROOM PLANS & ELEVATIONS
A-820.00	MAIL ROOM PLAN & ELEVATIONS

SCHEDULES & DETAILS

A-900.00	WINDOW SCHEDULE
A-901.00	WINDOW SCHEDULE
A-902.00	WINDOW SCHEDULE
A-903.00	LIGHTING SCHEDULE
A-904.00	DOOR SCHEDULE
A-905.00	DOOR DETAILS
A-906.00	DOOR TYPES
A-907.00	FINISH SCHEDULE
A-908.00	PARTITION SCHEDULE

FOUNDATION

FO-001	NYCTA NOTES
FO-100	FOUNDATION PLAN
FO-101	SITE PLAN
FO-200	NYCTA SECTIONS I
FO-201	FOUNDATION SECTIONS I
FO-202	FOUNDATION SECTIONS II
FO-203	FOUNDATION SECTIONS III
FO-204	FOUNDATION SECTIONS IV
FO-205	FOUNDATION SECTIONS V
FO-300	TYPICAL FOOTING DETAILS AND SCHEDULE
FO-301	TYPICAL COMBINED FOOTING DETAILS AND SCHEUDLE
FO-302	TYPICAL SLAB ON GRADE DETAILS I
FO-303	TYPICAL SLAB ON GRADE DETAILS II
FO-304	TYPICAL FOUNDATION WALL DETAILS
FO-305	TYPICAL FOUNDATION WALL DETAILS & SCHEDULES
FO-306	TYPICAL GRADE BEAM DETAILS
FO-307	GRADE BEAM SCHEDULES

STRUCTURE GENERAL NOTES

S-000	COVER SHEET & DRAWING LIST
S-001	GENERAL NOTES I
S-002	GENERAL NOTES II
S-003	GENERAL NOTES III
S-004	LAP SPLICE SCHEUDLES I
S-005	LAP SPLICE SCHEUDLES II
S-006	LAP SPLICE SCHEUDLES III
S-010	REFERENCE LOADING DIAGRAMS I

SUPERSTRUCTURE LAYOUT

S-101	LEVEL 1 CONSTRUCTION PLAN
S-102	LEVEL 2 CONSTRUCTION PLAN
S-103	LEVEL 3 CONSTRUCTION PLAN
S-104	LEVEL 4-10 CONSTRUCTION PLAN
S-105	LEVEL 11 CONSTRUCTION PLAN
S-106	LEVEL 12-13 CONSTRUCTION PLAN
S-107	LEVEL 14 CONSTRUCTION PLAN
S-108	LEVEL 15 & ROOF CONSTRUCTION PLAN

COLUMNS AND SHEAR WALLS

S-300	SHEAR WALL PLANS AND ELEVATIONS I
S-301	SHEAR WALL PLANS AND ELEVATIONS II
S-302	TYPICAL CONCRETE SHEAR WALL DETAILS I
S-303	TYPICAL CONCRETE SHEAR WALL DETAILS II
S-400	COLUMN SCHEDULE I
S-401	COLUMN SCHEDULE II
S-402	TYPICAL CONCRETE COLUMN DETAILS I
S-403	TYPICAL CONCRETE COLUMN DETAILS II
S-404	CONCRETE BEAM SCHEDULES
S-405	TYPICAL CONCRETE BEAM DETAILS I
S-406	TYPICAL CONCRETE BEAM DETAILS II
S-407	TYPICAL CONCRETE SLAB DETAILS
S-408	TYPICAL CONCRETE TWO-WAY SLAB DETAILS I
S-409	TYPICAL CONCRETE TWO-WAY SLAB DETAILS II

MECHANICAL DRAWINGS

M-101.00	MECHANICAL SYMBOLS, ABBREVIATIONS AND NOTES
M-201.00	MECHANICAL CELLAR DUCTWORK PLAN
M-202.00	MECHANICAL GROUND FLOOR DUCTWORK PLAN
M-203.00	MECHANICAL 2ND FLOOR DUCTWORK PLAN
M-204.00	MECHANICAL 3RD FLOOR DUCTWORK PLAN
M-205.00	MECHANICAL 4TH-10TH FLOOR DUCTWORK PLAN
M-206.00	MECHANICAL 11TH-13TH FLOOR DUCTWORK PLAN
M-207.00	MECHANICAL 14TH FLOOR DUCTWORK PLAN
M-208.00	MECHANICAL BULKHEAD ROOF DUCTWORK PLAN
M-301.00	MECHANICAL CELLAR PIPING PLAN
M-302.00	MECHANICAL GROUND FLOOR PIPING PLAN
M-303.00	MECHANICAL 2ND FLOOR PIPING PLAN
M-304.00	MECHANICAL 3RD FLOOR PIPING PLAN
M-305.00	MECHANICAL 4TH-10TH FLOOR PIPING PLAN
M-306.00	MECHANICAL 11TH-13TH FLOOR PIPING PLAN
M-307.00	MECHANICAL 14TH FLOOR PIPING PLAN
M-308.00	MECHANICAL BULKHEAD PIPING PLAN
M-401.00	MECHANICAL AIR RISER DIAGRAM
M-402.00	MECHANICAL HOT WATER RISER DIAGRAM
M-403.00	MECHANICAL CHILLED WATER RISER DIAGRAM
M-501.00	MECHANICAL SCHEDULES SHEET # 1 OF 2
M-502.00	MECHANICAL SCHEDULES SHEET # 2 OF 2
M-601.00	MECHANICAL DETAILS SHEET # 1 OF 5
M-602.00	MECHANICAL DETAILS SHEET # 2 OF 5
M-603.00	MECHANICAL DETAILS SHEET # 3 OF 5
M-604.00	MECHANICAL DETAILS SHEET # 4 OF 5
M-605.00	MECHANICAL DETAILS SHEET # 5 OF 5

FIRE ALARM DRAWINGS

FA-001.00	FIRE ALARM NOTES, SYMBOLS AND MATRIX
FA-101.00	FIRE ALARM SPECIFICATIONS SHEET # 1 OF 3
FA-102.00	FIRE ALARM SPECIFICATIONS SHEET # 2 OF 3
FA-103.00	FIRE ALARM SPECIFICATIONS SHEET # 3 OF 3
FA-201.00	FIRE ALARM SYSTEM RISER DIAGRAM
FA-300.00	FIRE ALARM CELLAR FLOOR PLAN
FA-301.00	FIRE ALARM GROUND FLOOR PLAN
FA-302.00	FIRE ALARM 2ND FLOOR PLAN
FA-303.00	FIRE ALARM 3RD FLOOR PLAN
FA-304.00	FIRE ALARM 4TH THRU 10TH FLOOR PLAN
FA-305.00	FIRE ALARM 11TH THRU 13TH FLOOR PLAN
FA-306.00	FIRE ALARM 14TH FLOOR PLAN
FA-307.00	FIRE ALARM BULKHEAD PLAN
FA-308.00	FIRE ALARM BULKHEAD ROOF PLAN
FA-401.00	FIRE ALARM DETAILS

PLUMBING DRAWINGS

P-101.00	PLUMBING SYMBOLS, NOTES, ABBREVIATIONS AND SITE PLAN
P-102.00	PLUMBING ENERGY ANALYSIS AND SCHEDULE
P-201.00	PLUMBING DETAILS
P-301.00	PLUMBING CELLAR UNDERGROUND PIPING PLAN
P-302.00	PLUMBING CELLAR ABOVE GROUND PIPING PLAN
P-303.00	PLUMBING GROUND FLOOR PLAN
P-304.00	PLUMBING 2ND FLOOR PLAN
P-305.00	PLUMBING 3RD FLOOR PLAN
P-306.00	PLUMBING 4TH-10TH FLOOR PLAN
P-307.00	PLUMBING 11TH-13TH FLOOR PLAN
P-308.00	PLUMBING 14TH FLOOR PLAN
P-309.00	PLUMBING BULKHEAD PLAN
P-401.00	PLUMBING SANITARY RISER DIAGRAM SHEET # 1 OF 3
P-402.00	PLUMBING SANITARY RISER DIAGRAM SHEET # 2 OF 3
P-403.00	PLUMBING SANITARY RISER DIAGRAM SHEET # 3 OF 3
P-404.00	PLUMBING STORM WATER RISER DIAGRAM
P-405.00	PLUMBING GAS RISER DIAGRAM SHEET # 1 OF 2
P-406.00	PLUMBING GAS RISER DIAGRAM SHEET # 2 OF 2
P-407.00	PLUMBING WATER RISER DIAGRAM SHEET # 1 OF 3
P-408.00	PLUMBING WATER RISER DIAGRAM SHEET # 2 OF 3
P-409.00	PLUMBING WATER RISER DIAGRAM SHEET # 3 OF 3

SPRINKLER DRAWINGS

SP-101.00	SPRINKLER LIST, NOTES, SYMBOLS, ABBREVIATIONS AND SITE PLAN
SP-102.00	SPRINKLER NOTES AND SCHEDULES
SP-201.00	SPRINKLER DETAILS
SP-301.00	SPRINKLER CELLAR FLOOR PLAN
SP-302.00	SPRINKLER GROUND FLOOR PLAN
SP-303.00	SPRINKLER 2ND FLOOR PLAN
SP-304.00	SPRINKLER 3RD FLOOR PLAN
SP-305.00	SPRINKLER 4TH-8TH FLOOR PLAN
SP-306.00	SPRINKLER 11TH-13TH FLOOR PLAN
SP-307.00	SPRINKLER 14TH FLOOR PLAN
SP-308.00	SPRINKLER BULKHEAD PLAN
SP-401.00	SPRINKLER/FSP RISER DIAGRAM
SP-402.00	SPRINKLER TEMPORARY DRY FIRE STANDPIPE RISER DIAGRAM

ENERGY CODE DRAWINGS

EN-100.00	ENERGY CODE COMPLIANCE - SHEET 1
EN-101.00	ENERGY CODE COMPLIANCE - SHEET 2

SUPPORT OF EXCAVATION DRAWINGS

SOE-001.00	GENERAL NOTES
SOE-002.00	T.A. NOTES AND INSURANCE CLAUSES
SOE-100.00	SOE PLAN
SOE-200.00	SECTIONS
SOE-201.00	SECTIONS
SOE-202.00	SECTIONS
SOE-203.00	SECTIONS
SOE-204.00	SECTIONS
SOE-205.00	SECTIONS
SOE-206.00	SECTIONS
SOE-207.00	SECTIONS
SOE-400.00	SECTIONS
SOE-401.00	SECTIONS
SOE-402.00	SECTIONS

1 DRAWING INDEX
SCALE: N.T.S.

Client:
RANGER PROPERTIES
4790 BROADWAY
NEW YORK, NY 10034

Architect:
FOGARTY FINGER architecture | interiors
69 Walker St, New York, NY 10013
t 212 966 7450 f 212 966 7444

Structural:
Thornton Tomasetti
51 Madison Avenue
New York, NY 10010
Tel 917.661.7800

MEP / FP:
Concessi Engineering, PC
499 7th Avenue, 11th Floor South Tower
New York, NY 10018
Tel 212.629.6810

GEOTECH:
FNA Engineering Services, PC
670 Bergen Boulevard, Floor 2
Ridgefield, NJ 07657
Tel 201.241.2444

FACADE:
Simpson Gumpertz & Heger
550 7th Avenue, 10th Floor
New York, NY 10018
Tel 212.271.7000

CODE:
Metropolis
22 Courtland Street, 10th Floor
New York, NY 10007
Tel 212.233.6344

No.	Date	Issue
02	02.06.2019	DD ESTIMATING
01	11.20.2018	SCHEMATIC DESIGN

Project:
4790 BROADWAY
NEW YORK, NY 10034

Drawing Title:
DRAWING INDEX

Seal & Signature:

DATE (MM-DD-YY): 02-05-2019
PROJECT No.:
DRAWING BY: --
CHK BY: --
DWG. No.: G-000.00
CADD FILE No.:

ANSI A117.1 RS 4-6 WITH NYC MODIFICATIONS:

4.2 SPACE ALLOWANCES FOR WHEELCHAIRS - 36" X 48" TYPICAL MINIMUM.

4.3 ACCESSIBLE ROUTE - MINIMUM 36" WIDTH, SLOPE GREATER THAN 1:20 SHALL COMPLY WITH RAMP REQUIREMENTS, CROSS SLOPE MAY NOT EXCEED 1 IN 50, CHANGES IN HEIGHT GREATER THAN 1/2" REQUIRE RAMP OR SIMILAR, STAIRS SHALL NOT BE PART OF ACCESSIBLE ROUTE. ACCESSIBLE ROUTES SHALL ALSO SERVE AS MEANS OF EGRESS FOR EMERGENCIES OR CONNECT TO AN AREA OF REFUGE.

4.4 PROTRUDING OBJECTS BETWEEN HEIGHT OF 27" AND 80" SHALL PROTRUDE NO MORE THAN 4". BELOW 27" PROTRUSIONS ANY AMOUNT. MINIMUM HEADROOM IS 80".

4.5 CHANGES IN LEVEL UP TO $\frac{1}{4}$" MAY BE VERTICAL. CHANGES IN LEVEL TO 1" SHALL BE BEVELED WITH SLOPE NOT TO EXCEED 1:2. CHANGES IN LEVEL GREATER THAN 1" SHALL BE BY MEANS OF RAMP. FIGURE 7D IS MODIFIED AS INDICATED IN TEXT.

4.6.2 ACCESSIBLE PARKING SHALL BE LOCATED ON SHORTEST POSSIBLE ROUTE TO ENTRY. PARKING SPACES SHALL BE MINIMUM 96" AND SHALL HAVE ADJACENT AISLE 60" WHICH MAY BE SHARED BY TWO SPACES. IF MORE THAN 30 SPACES PROVIDED, TWO SPACES MUST BE PROVIDED USABLE BY HIGH ACCESS VEHICLES 108" HIGH WITH 96" WIDE SPACE AND 96" ACCESS AISLE.

4.6.2.1 MULTIPLE DWELLINGS - IN THE PARKING FACILITY OF A MULTIPLE DWELLING WHERE USED EXCLUSIVELY ON ACCESSORY BASIS FOR PARKING BY RESIDENTS, SPACES FOR HANDICAPPED MAY BE RENTED OUT ON A MONTHLY BASIS TO NON DISABLED, SUBJECT TO THE PROVISION THAT SPACE MUST BE RELINQUISHED AT END OF MONTH UPON REQUEST OF HANDICAPPED RESIDENT OR EMPLOYEE.

4.6.2.3 FULL SIGNS - SIGNS WHICH INDICATE "FULL" SHALL HAVE A STATEMENT INDICATING HANDICAP SPACES THAT REMAIN AVAILABLE FOR PHYSICALLY HANDICAPPED PERSONS WHEN ONE OR MORE SUCH SPACES ARE STILL AVAILABLE.

4.6.3 PASSENGER LOADING ZONES SHALL PROVIDE AN ACCESS AISLE 48" WIDE AND 20' LONG ADJACENT AND PARALLEL TO THE VEHICLE PULL UP SPACE AND CONNECTED TO ACCESSIBLE ROUTE. VERTICAL CLEARANCE OF 114" SHALL BE PROVIDED.

4.8 RAMPS - MINIMUM 1:12 SLOPE; MINIMUM 3', MAXIMUM 30' LENGTH; 5' MINIMUM LANDINGS, HANDRAILS REQUIRED IF RISE GREATER THAN 6", 12" EXTENSION AT TOP & BOTTOM WITH 1-1/2" CLEAR SPACE. DOORS OPENING ONTO RAMPS TO COMPLY WITH REQUIREMENT FOR STAIR DOORS (27-3750. NON-SLIP SURFACE IS REQUIRED.

4.9 INTERIOR STAIRS FOR EXIT STAIRS PER SECTION 27-375 NYC CODE

4.10 ELEVATORS - PER RS 18-1 REQUIREMENTS. ELEVATORS TO BE FILED SEPARATELY. SEE B104.

4.11 PLATFORM LIFTS MAY BE PART OF AN ACCESSIBLE ROUTE - PER RS 18-1 REQUIREMENTS.

4.13 DOORS - MINIMUM CLEAR OPENING OF 32". DOORS PART OF AN ACCESSIBLE ROUTE SUBJECT TO REQUIREMENTS AND MANEUVERING CLEARANCES SHOWN ON CA5, HARDWARE AND OPENING FORCE SHALL COMPLY WITH 4.13

4.14 ENTRANCES SHALL BE PART OF AND CONNECTED TO AN ACCESSIBLE ROUTE.

4.16 WATER CLOSETS TO BE PROVIDED WITH REQUIRED CLEAR AREA SET AT 17-19" ABOVE FLOOR, GRAB BARS CONTROLS AND DISPENSERS AS REQUIRED.

4.17 TOILET STALLS SHALL COMPLY WITH 4.16.

4.19 LAVATORIES SHALL BE MOUNTED WITH CLEARANCE OF AT LEAST 29" ABOVE FLOOR AND HEIGHT NOT TO EXCEED 34". A CLEAR FLOOR SPACE OF 30" BY 48" EXTENDING 19" BELOW SINK SHALL BE PROVIDED. MIRRORS SHALL BE MOUNTED NO HIGHER THAN 40".

4.20 BATHTUBS IN DWELLING UNITS SHALL COMPLY WITH THE PROVISIONS OF 4.32.4.4.

4.21 SHOWERS IN DWELLING UNITS SHALL COMPLY WITH 4.32.4.5

4.23 STORAGE FACILITIES SHALL BE PROVIDED WITH CLEAR FLOOR AREA 30" X 48" AND WITHIN SPECIFIED REACH OF PERSON USING A WHEELCHAIR. CLOTHES RODS SHALL BE MAXIMUM OF 54".

4.24 GRAB BARS DIAMETER $1\frac{1}{4}$" - $1\frac{1}{2}$" WIDTH WITH $1\frac{1}{2}$" CLEARANCE TO WALL, BENDING STRESS OF 250LPF MINIMUM AND SHEAR STRESS OF 250LPF MINIMUM.

4.25 CONTROL AND OPERATING MECHANISMS ALONG ACCESSIBLE ROUTE AND AS PART OF ACCESSIBLE ELEMENTS SHALL BE PLACED WITHIN REACH OF PERSON IN WHEELCHAIR AND SHALL BE OPERABLE WITH ONE HAND WITHOUT ANY SPECIAL MANIPULATION AND REQUIRE FORCE NOT GREATER THAN 5 LPF.

4.26 ALARMS SHALL BE BOTH AUDIBLE AND VISUAL AND COMPLY WITH RS 17-3C

4.27 DETECTABLE WARNINGS SHALL BE PROVIDED ON WALKING SURFACES, DOORS TO HAZARDOUS AREAS OPEN STAIRS AND HAZARDOUS VEHICLE AREAS.

4.28 SIGNAGE THAT PROVIDES EMERGENCY INFORMATION, GENERAL CIRCULATION INFORMATION OR IDENTIFIES ROOMS OR SPACES SHALL BE PROVIDED WITH FEATURES USABLE BY THE DISABLED AS DESCRIBED IN TEXT.

4.32 DWELLING UNITS SHALL BE ADAPTABLE AND USABLE, AND SHALL INCLUDE BATHROOMS, DOORS, WATER CLOSETS, ILAVS, MIRRORS, MEDICINE CABINETS, SHOWERS, BATHTUBS, KITCHENS AND APPLIANCES, SINK AND LAUNDRY. BATHROOM DOORS MAY SWING IN PROVIDED IT IS REVERSIBLE; MODIFICATIONS TO ADAPTABLE BATHROOM AND KITCHEN DIMENSIONS AND ARRANGEMENTS AS SHOWN ON CA5. SEE A410 AND A411.

4.3.7 AN ACCESSIBLE ROUTE WITH SLOPE GREATER THAN 1:20 IS A RAMP AND MUST COMPLY WITH 4.8.

4.3.8 CHANGES IN LEVEL GREATER THAN $\frac{1}{4}$" SHALL BE ACCOMPLISHED BY MEANS OF ACCESSIBLE ELEMENT.

4.3.10 ACCESSIBLE ROUTES SERVING ANY ACCESSIBLE SPACE SHALL ALSO SERVE AS MEANS OF EGRESS FOR EMERGENCIES OR CONNECT TO AN AREA OF RESCUE ASSISTANCE.

4.3.11 AREAS OF RESCUE ASSISTANCE SHALL BE ONE OF THE FOLLOWING:

1. A PORTION OF A STAIRWAY WITHIN A SMOKEPROOF ENCLOSURE.
2. A PORTION OF AN EXTERIOR BALCONY LOCATED ADJACENT TO AN EXIT STAIRWAY.
3. A PORTION OF A ONE-HOUR FIRE RATED CORRIDOR IMMEDIATELY ADJACENT TO AN EXIT STAIR.
4. A VESTIBULE LOCATED IMMEDIATELY ADJACENT TO AN ENCLOSURE
5. A PORTION OF A STAIRWAY LANDING WHICH IS VENTED AND SEPARATED BY ONE-HOUR DOORS.
6. AN APPROVED AREA OR ROOM EQUIPPED WITH SMOKE BARRIER.
7. AN ELEVATOR LOBBY WHEN PRESSURIZED AND PROVIDED WITH COMPLIANT SIZE, COMMUNICATION AND SIGNAGE.

4.4 PROTRUDING OBJECTS ABOVE 27" MAXIMUM PROJECTION 4", MINIMUM HEADROOM 80".

4.5 CHANGES IN LEVEL GREATER THAN $\frac{1}{4}$" REQUIRE RAMP.

4.6 PARKING - MINIMUM VERTICAL CLEARANCE OF 114" IS REQUIRED ALONG PASSENGER LOADING ZONE. ACCESS AISLE 60" WIDE AND 20' LONG IS REQUIRED ADJACENT TO PASSENGER LOADING.

4.8 RAMPS MAXIMUM SLOPE OF 1:12 WITH LANDING LENGTH MINIMUM OF XX, 36" MINIMUM WIDTH, HANDRAILS AND EDGE PROTECTION REQUIRED.

4.10 ELEVATOR CONTROLS, OPERATION, SIGNALS, SIZE AND COMMUNICATIONS SHALL BE USABLE AND ACCESSIBLE BY PERSONS IN WHEELCHAIR.

4.11 PLATFORM LIFTS SHALL FACILITATE UNASSISTED ENTRY, OPERATION AND EXIT FROM LIFT.

4.13 DOORS SHALL COMPLY WITH SIZE CLEARANCES, HARDWARE AND OPENING FORCE.

4.14 ENTRANCES SHALL BE PART OF AN ACCESSIBLE ROUTE.

4.15 DRINKING FOUNTAINS SHALL COMPLY WITH HEIGHT, CONTROLS AND CLEARANCES.

4.16 WATER CLOSETS SHALL COMPLY WITH CLEAR FLOOR AREA, HEIGHT, GRAB BARS CONTROLS AND DISPENSER REQUIREMENTS.

4.17 TOILET STALLS SHALL COMPLY WITH SIZE, CLEARANCES, DOORS AND GRAB BAR REQUIREMENTS.

4.18 URINALS SHALL COMPLY WITH HEIGHT, CLEAR FLOOR AREA AND CONTROL REQUIREMENTS.

4.19 LAVATORIES SHALL COMPLY WITH HEIGHT AND CLEARANCES, CLEAR FLOOR AREA, MIRROR AND FAUCET REQUIREMENTS.

4.20 BATHTUBS SHALL COMPLY WITH CLEAR FLOOR AREA, SEAT, GRAB BAR, SHOWER SPRAY AND CONTROLS REQUIREMENTS.

4.21 SHOWER STALLS SHALL COMPLY WITH SIZE AND CLEARANCE, SEAT, GRAB BARS CONTROLS AND SHOWER SPRAY REQUIREMENTS.

4.22 TOILET ROOMS SHALL BE PROVIDED ON AN ACCESSIBLE ROUTE. DOORS SHALL NOT SWING INTO THE CLEARANCES REQUIRED FOR ANY FIXTURE. AN UNOBSTRUCTED TURNING SPACE SHALL BE PROVIDED. THE CLEAR FLOOR SPACE AT FIXTURES, THE ACCESSIBLE ROUTE AND TURNING SPACE MAY OVERLAP. IF ANY TOILET FIXTURE IS SUPPLIED AT LEAST ONE OF EACH TYPE MUST BE COMPLIANT.

4.23 BATHROOMS, BATHING FACILITIES AND SHOWER ROOMS SHALL BE PROVIDED ON AN ACCESSIBLE ROUTE. DOORS SHALL NOT SWING INTO THE CLEARANCES REQUIRED FOR ANY FIXTURE. AN UNOBSTRUCTED TURNING SPACE SHALL BE PROVIDED. THE CLEAR FLOOR SPACE AT FIXTURES, THE ACCESSIBLE ROUTE AND TURNING SPACE MAY OVERLAP. IF ANY TOILET FIXTURE IS SUPPLIED AT LEAST ONE OF EACH TYPE MUST BE COMPLIANT.

4.24 SINKS REQUIRED TO BE ACCESSIBLE SHALL COMPLY WITH REQUIRED HEIGHT AND CLEARANCE, DEPTH, CLEAR FLOOR SPACE, PIPE ARRANGEMENT AND FAUCETS.

4.25 STORAGE FACILITIES SHALL COMPLY WITH REQUIRED CLEAR FLOOR SPACE, HEIGHT AND HARDWARE REQUIREMENTS.

4.26 HANDRAILS, GRAB BARS, TUB AND SHOWER SEATS SHALL COMPLY WITH REQUIRED SIZE, SPACING AND STRUCTURAL STRENGTH REQUIREMENTS.

4.27 CONTROLS AND OPERATING MECHANISMS THAT ARE PART OF AN ACCESSIBLE ROUTE OR ELEMENT SHALL COMPLY WITH CLEAR FLOOR AREA, HEIGHT AND OPERATION REQUIREMENTS

4.28 ALARMS SHALL COMPLY WITH AUDIBLE, VISUAL, HEIGHT AND LOCATION REQUIREMENTS.

4.29 DETECTABLE WARNINGS SHALL BE PROVIDED AND SHALL COMPLY WITH REQUIREMENTS.

4.30 SIGNAGE SHALL BE INSTALLED WITH PROPER SYMBOLS, CHARACTER PROPORTION, HEIGHT, BRAILLE, FINISH AND CONTRAST AND MOUNTING HEIGHT AND LOCATION AS REQUIRED.

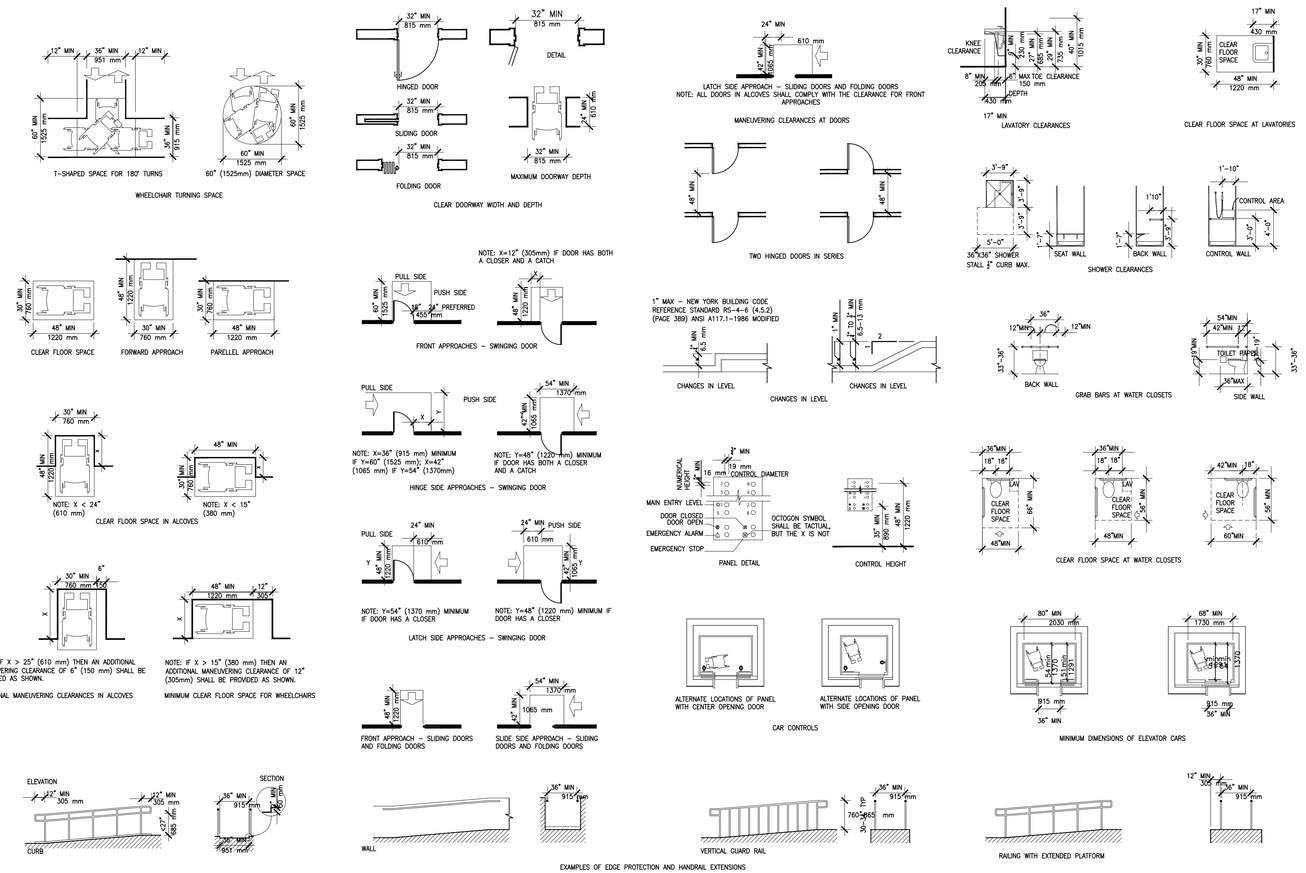

ACCESIBILITY CODE ANALYSIS

NYC CODE - LOCAL LAW 58

27-292.1 AS SET FORTH THIS BUILDING SHALL BE PROVIDED WITH ELEMENTS AND FACILITIES TO MAKE BUILDINGS ACCESSIBLE AND USABLE BY PEOPLE HAVING PHYSICAL DISABILITIES.

27-292.4 THIS SUB-ARTICLE SHALL APPLY. THE PROVISIONS OF THIS ARTICLE SHALL BE SUPPLEMENTAL TO AND TAKE PRECEDENCE OVER LESS RESTRICTIVE PROVISIONS OF REFERENCED NATIONAL STANDARDS.

27-292.4.1 PRIMARY ENTRANCE TO BE ACCESSIBLE. EXTERIOR ACCESSIBLE ROUTE TO BE PROVIDED. ALL EXTERIOR ENTRANCES ARE ACCESSIBLE INTERIOR ACCESSIBLE ROUTE TO BE PROVIDED. ALL AREAS ARE ON PATH OF TRAVEL TO COMPLY WITH RS 4-6. ACCESSIBLE ROUTE ELEVATORS SHALL COMPLY WITH SUBCHAPTER 18, WHERE AN INTERIOR ACCESSIBLE ROUTE IS REQUIRED. SEE B104. IN ASSEMBLY OCCUPANCIES HAVING A MEZZANINE OR B BALCONY WITH SIMILAR VIEW AS THAT OF MAIN FL ACCESSIBILITY TO MEZZANINE SHALL NOT BE REQUIRED PROVIDED THE TOILETS ARE LOCATED ON MAIN FLOOR.

27-292.8 ALL DWELLING UNITS IN BUILDINGS WITH ELEVATORS SHALL BE ADAPTABLE. THEY SHALL BE CONSTRUCTED AND EQUIPPED IN ACCORDANCE WITH RS 4-6 WITH RESPECT TO DOOR OPENING, CLEAR FLOOR SPACE AND ACCESSIBLE ROUTE. SEE B104, A410, A411. BATHROOMS, KITCHENS AND KITCHENETTES SHALL COMPLY WITH REQUIREMENTS OF RS 4-6 WITH RESPECT TO ADAPTABILITY AND MUST BE CAPABLE OF BEING MADE USABLE. WASHING AND DRYING MACHINES SHALL COMPLY WITH OR BE CAPABLE OF BEING CONVERTED TO REQUIREMENTS IN RS 4-6. EMERGENCY WARNING DEVICES SHALL BE CAPABLE OF BEING CONVERTED TO AUDIBLE AND VISUAL INDICATION AS REQUIRED BY SUBARTICLE 17, ARTICLE 6, RS 7-11, RS 17-12 AND RS 4-6.

27-292.10 ALL SPACES AND ROOMS INTENDED FOR GENERAL PUBLIC AND OCCUPANT USE SHALL BE ACCESSIBLE AND USABLE. DOORS & FLOORS SHALL COMPLY WITH RS 4-6. LOCATION & NUMBER OF PLUMBING FIXTURES SHALL COMPLY WITH RS 16-5. SEE B100.

27-292.15 EMERGENCY WARNING SYSTEMS SHALL COMPLY WITH REQUIREMENTS OF RS 4-6.

27-292.16 CONTROLS AND OPERATING SYSTEMS SHALL COMPLY WITH REQUIREMENTS RS 4-6.

27-292.17 TACTILE WARNINGS SHALL BE PROVIDED AT HAZARDOUS LOCATIONS AND SHALL COMPLY WITH REQ'S OF RS 4-6.

27-292.18 SIGNAGE AND SYMBOLS OF ACCESSIBILITY SHALL BE PROVIDED AT THE FOLLOWING LOCATIONS: PARKING, LOADING ZONES, TOILETS, DRINKING FOUNTAINS, TELEPHONES. WHERE INFORMATION OR DIRECTIONAL SIGNAGE IS DEEMED NECESSARY AND SHALL COMPLY WITH RS 4-6.

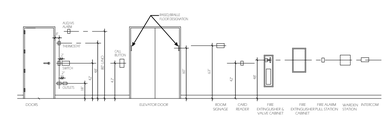

THERMOSTAT:
- 48" MAX AFF TO HIGHEST OPERABLE PART.

INTERCOM:
- 48" MAX AFF TO HIGHEST OPERABLE PART.

LIGHT SWITCHES:
- 48" MAX AFF TO HIGHEST OPERABLE PART IN 'ON' POSITION.

WALL RECEPTACLES:
- 15" MIN AFF TO CENTERLINE OF LOWEST RECEPTACLE (OR 18 INCHES MIN TO CENTERLINE OF BOX)
- 48" MAX AFF TO CENTERLINE OF HIGHEST RECEPTACLE.

BATHROOM RECEPTACLES:
- 44" MAX AFF (PREFERRED) TO CENTERLINE OF HIGHEST RECEPTACLE.
- 12" MIN FROM ANY OBSTRUCTION.
- 12" MAX FROM LEADING EDGE OF VANITY COUNTER IF ON SIDE WALL..

RECEPTACLES BEHIND KITCHEN COUNTERS:
- 46" MAX AFF TO CENTERLINE OF HIGHEST RECEPTACLE.
- 2" MIN FROM ANY OBSTRUCTION. (INCLUDING FRIDGE)
- 6" MIN FROM CORNERS
- 6" MAX AFF TO 'ON' POSITION OF REDUNDANT CONTROLS FOR RANGE HOOD (TYPE A UNITS)
- 24" MAXIMUM DEPTH BETWEEN LEADING EDGE OF COUNTERTOP AND RECEPTACLES/SWITCHES LOCATED ON KITCHEN BACKSPLASH WALL (IN TYPE A AND COMMON AREA KITCHENETTES)

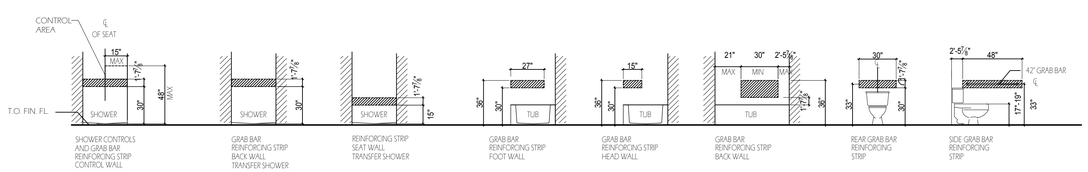

1 ACCESSIBILITY REQUIREMENTS
SCALE: N.T.S.

Client:
RANGER PROPERTIES
4790 BROADWAY
NEW YORK, NY 10034

Architect:
FOGARTY FINGER architecture | interiors
69 Walker St, New York, NY 10013
t 212 966 7450 f 212 966 7444

Structural:
Thornton Tomasetti
51 Madison Avenue
New York, NY 10010
Tel 917.661.7800

MEP / FP:
Concessi Engineering, PC
499 7th Avenue, 11th Floor South Tower
New York, NY 10018
Tel 212.629.6810

GEOTECH:
FNA Engineering Services, PC
670 Bergen Boulevard, Floor 2
Ridgefield, NJ 07657
Tel 201.241.2444

FACADE:
Simpson Gumpertz & Heger
550 7th Avenue, 10th Floor
New York, NY 10018
Tel 212.271.7000

CODE:
Metropolis
22 Courtland Street, 10th Floor
New York, NY 10007
Tel 212.233.6344

No.	Date	Issue
02	02.06.2019	DD ESTIMATING
01	11.20.2018	SCHEMATIC DESIGN

Project:
4790 BROADWAY
NEW YORK, NY 10034

Drawing Title:
ACCESSIBILITY REQUIREMENTS

Seal & Signature:

DATE (MM-DD-YY): 02-05-2019
PROJECT No.:
DRAWING BY: –
CHK BY: –
DWG. No.: G-001.00
CADD FILE No.:

ABBREVIATIONS

1P+1S	ONE PULL & ONE SHELF
@	AT
AC	AIR CONDITIONING
ACT	ACOUSTICAL CEILING TILE
AD	AREA DRAIN
ADJ	ADJUSTABLE
AFF	ABOVE FINISHED FLOOR
AFP	ACCORDION FOLDING PARTITION
AGG	AGGREGATE
ALT	ALTERNATE
AL	ALUMINUM
AP	ACCESS PANEL
APPROX	APPROXIMATE
AR	ACID RESISTANT
ARCH	ARCHITECT(URAL)
ASPH	ASPHALT
AV	AUDIOVISUAL
AWG	AMERICAN WIRE GAUGE
AWT	ACOUSTICAL WALL TREATMENT
L	ANGLE
&	AND
BIT	BITUMINOUS
BLDG	BUILDING
BLKG	BLOCKING
BM	BENCH MARK/BEAM
BOS	BOTTOM OF STEEL
BOT	BOTTOM
BRG	BEARING
BRK	BRICK
BUR	BUILT-UP ROOF
CAB	CABINET
CAR	CARPET
CAT	CATALOG
CB	CHALKBOARD/CATCH BASIN
CFM	CUBIC FEET PER MINUTE
CH	CABINET HEATER
CI	CAST IRON
CJ	CONTROL JOINT
CL	CENTERLINE
CLR	CLEAR
CLG	CEILING
CMP	CORRUGATED METAL PIPE
CMT	CERAMIC MOSAIC TILE
CMU	CONCRETE MASONRY UNIT
CO	CLEAN OUT
COL	COLUMN
COMP	COMPACTED
CONC	CONCRETE
CONSTR	CONSTRUCTION
CONT	CONTINUOUS/CONTINUE
CONTR	CONTRACTOR
CORR	CORRUGATED
CPT	CARPET
CT	CERAMIC TILE
C TO C	CENTER TO CENTER
CSK	COUNTER SINK
CU FT/CF	CUBIC FEET
CU IN/CI	CUBIC INCH
CU YD/CY	CUBIC YARD
CUSP	CUSPIDOR
CW	COLD WATER
CWF	CEMENTITIOUS WOOD FIBER
d	PENNY (NAILS, ETC.)
D	DEPTH/DEEP
°	DEGREE
DC	DISPLAY CASE
DEPT	DEPARTMENT
DET	DETAIL
DF	DRINKING FOUNTAIN
DIA/Ø	DIAMETER
DIM	DIMENSION
DIV	DIVISION
DL	DEAD LOAD
DWG	DRAWING
DS	DOWN SPOUT
DWC	DRINKING WATER COOLER
E	EAST
EA	EACH
EF	EACH FACE
EJ	EXPANSION JOINT
EL	ELEVATION
ELEC	ELECTRIC(AL)
ELEV	ELEVATOR
ENGR	ENGINEER
EP	ELECTRICAL PANELBOARD
EQ	EQUAL
EQUIP	EQUIPMENT
EW	EACH WAY
EIFS	EXTERIOR INSULATION AND FINISH SYSTEM
EXH	EXHAUST
EXIST	EXISTING
EXP	EXPANSION
EXT	EXTERIOR
EXTN	EXTENSION
FD	FLOOR DRAIN
FHC	FIRE HOSE CABINET
FIN	FINISH
FIN FL	FINISH FLOOR
FLR	FLOOR
FDN	FOUNDATION
FSR	FLEXIBLE SHEET ROOFING
FSSK	FLOOR SERVICE SINK
FT/'	FEET
FTG	FOOTING
FE	FIRE EXTINGUISHER
FEC	FIRE EXTINGUISHER CABINET
GA	GAUGE
GALV	GALVANIZE(D)
GB	GRAB BAR
GL	GLASS
GWB	GYPSUM WALLBOARD
H	HEIGHT/HIGH
HB	HOSE BIBB
HDWE	HARDWARE
HM	HOLLOW METAL
HORIZ	HORIZONTAL
HPT	HIGH POINT
HS	HIGH STRENGTH
HTG	HEATING
HVAC	HEATING/VENTILATING/ AIR CONDITIONING
HPDL	HIGH PRESSURE DECORATIVE LAMINATE
HW	
HWY	HIGHWAY
ID	INSIDE DIAMETER
IN/"	INCH
INCL	INCLUDE(D), (ING)
INFO	INFORMATION
INSUL	INSULATION/INSULATED
INTR	INTERIOR
INV	INVERT
JS	JOIST SUBSTITUTE
JST	JOIST
JT	JOINT
KIT	KITCHEN
KITCHNT	KITCHENETTE
L	LENGTH
LAM	LAMINATE(D)
LAV	LAVATORY
LB/#	POUND
LKR	LOCKER
LL	LIVE LOAD
LLH	LONG LEG HORIZONTAL
LLV	LONG LEG VERTICAL
LVR	LOUVER
LW	LONG WAY
M	METER/THOUSAND
MAS	MASONRY
MAT	MATERIAL
MAX	MAXIMUM
MB	MARKER BOARD
MECH	MECHANICAL
MEZZ	MEZZANINE
MFR	MANUFACTURER
MH	MANHOLE
MIN	MINIMUM
MISC	MISCELLANEOUS
MM	MILLIMETER
MO	MASONRY OPENING
MET	METAL
N	NORTH
NIC	NOT IN CONTRACT
NO/#	NUMBER

ABBREVIATIONS

NOM	NOMINAL
NTS	NOT TO SCALE
OC	ON CENTER
OD	OUTSIDE DIAMETER
OFD	OVERFLOW DRAIN
OPNG	OPENING
OPP	OPPOSITE
OPP HD	OPPOSITE HAND
O TO O	OUT TO OUT
OW	OPERABLE WALL
OWSJ	OPEN WEB STEEL JOIST
OZ	OUNCE
P & 1S	CLOSET POLE & 1 SHELF
PA	PUBLIC ADDRESS
PERF	PERFORATED
PL	PLATE/PROPERTY LINE
PLAS	PLASTER
PLAM	PLASTIC LAMINATE
PLBG	PLUMBING
PLYWD	PLYWOOD
PREFAB	PREFABRICATED
PS	PROJECTION SCREEN
PSF	POUNDS PER SQUARE FOOT
PSI	POUNDS PER SQUARE INCH
PSS	PENCIL SHARPENER SUPPORT
PVC	POLYVINYL CHLORIDE
PVMT	PAVEMENT
QT	QUARRY TILE
R	RISER
RA	RETURN AIR
RAD/R	RADIUS
RB	RESILIENT BASE
RCP	REINFORCED CONCRETE PIPE
RD	ROOF DRAIN
RDG	ROLL DOWN GRILLE
RDS	ROLL DOWN SHUTTER
REF	REFERENCE
REFR	REFRIGERATOR
REINF	REINFORCING
REQ'D	REQUIRED
REV	REVISION(S)
RM	ROOM
RO	ROUGH OPENING
ROW	RIGHT-OF-WAY
S	SOUTH
SA	SUPPLY AIR
SAN	SANITARY
SCHED	SCHEDULE
SD	STORM DRAIN/SMOKE DETECTOR
SECT	SECTION
SEW	SEWER
SGFT	STRUCTURAL GLAZED FACING TILE
SHT	SHEET
SIM	SIMILAR
SMD	SEE MECHANICAL DRAWINGS
SP	SPACE
SPD	SEE PLUMBING DRAWINGS
SPEC(S)	SPECIFICATION(S)
SPKR	SPEAKER
SQ	SQUARE
SQ FT/SF	SQUARE FEET
SQ IN/SI	SQUARE INCHES
SQ YD/SY	SQUARE YARDS
SSD	SEE STRUCUTRAL DRAWINGS
SST	STAINLESS STEEL
ST	STORM/STREET
STD	STANDARD
STL	STEEL
STRUCT.	STRUCTURAL
SUSP	SUSPENDED
SW	SHORT WAY/SIDEWALK
SYMB	SYMBOL
SYMM	SYMMETRY(ICAL)
SYNTH	SYNTHETIC
T	TREAD
T&B	TOP AND BOTTOM
T&G	TONGUE AND GROOVE
TA	TOILET ACCESSORY(IES)
TB	TACK BOARD
TC	TOP OF CURB
TEL	TELEPHONE
TER	TERRAZZO
TOC	TOP OF CONCRETE
TO	TOP OF
TOF	TOP OF FOOTING
TOS	TOP OF STEEL
TOM	TOP OF MASONRY
TT	TERRAZZO TILE
TV	TELEVISION
TYP	TYPICAL
TWS	TACKABLE WALL SURFACE
UON	UNLESS OTHERWISE NOTED
UV	UNIT VENTILATOR
UR	URINAL
VCT	VINYL COMPOSITION TILE
VCGWB	VINYL COVERED GYPSUM WALLBOARD
VERT	VERTICAL
VIF	VERIFY IN FIELD
VIT	VITREOUS
VOL	VOLUME
VR	VAPOR RETARDER
VRB	VENTED RESILIENT BASE
VS	VENT STACK
VT	VINYL TILE
W	WEST/WIDE/WIDTH
W/	WITH
W/O	WITHOUT
WA	WARDROBE ACCESSORIES
WB	WOOD BASE
WC	WATER CLOSET/WIND COLUMN
WD	WOOD
WH	WATER HEATER
WP	WORKING POINT
WSSK	WALL SERVICE SINK
WWF	WELDED WIRE FABRIC
YD	YARD/YARD DRAIN

MATERIAL SYMBOLS

- STRUCTURAL CONCRETE
- BATT INSULATION
- RIGID INSULATION
- TERRA-COTTA
- FINISH WOOD
- FINISH WOOD
- WOOD BLOCKING
- PLYWOOD
- GYPSUM WALLBOARD
- STEEL (IN SECTION)
- BRONZE (IN SECTION)
- ALUMINUM (IN SECTION)
- GRANITE
- SAND, GROUT, PLASTER, GWB,
- CONCRETE
- TERRAZZO
- MARBLE
- SLATE
- PRECAST CONCRETE
- FACE BRICK
- FIRE BRICK
- GLAZED BRICK
- CONCRETE MASONRY UNIT (PLAN)
- METAL SHAPES
- ACOUSTIC TILE CEILING
- CARPET
- CONCRETE MASONRY UNIT (CORED, IN SECTION)
- CONCRETE MASONRY UNIT (SOLID, IN SECTION)
- SPRAY-ON INSULATION OR FIRE PROTECTION
- WIRE FENCE
- CORRUGATED METAL FORMING
- METAL ROOF DECK

DRAFTING SYMBOLS

001	DOOR TAG
000	WINDOW TAG
000	FURNITURE TAG
1	KEY NOTE TAG
A1	PARTITION TYPE TAG
SC	SMOKE AND CO DETECTOR
FLOOR AREA: 153 SF; GLAZING AREA: 64 SF; OPENABLE AREA: 25 SF (ROOM FLOOR AREA)	LIGHT AND AIR TAG
0 / A-000 (DETAIL NUMBER / SHEET NUMBER)	DETAIL TAG
1 (REVISION NUMBER)	DRAWING REVISIONS
A	COLUMN GRID LINE
	MATCH LINE
RD	ROOF DRAIN
TX	ROOF MOUNTED TOILET EXHAUST
KX	ROOF MOUNTED KITCHEN EXHAUST
OA	ROOF MOUNTED FRESH AIR INTAKE

Client:

RANGER PROPERTIES
4790 BROADWAY
NEW YORK, NY 10034

Architect:

FOGARTY FINGER architecture | interiors
69 Walker St, New York, NY 10013
t 212 966 7450 f 212 966 7444

Structural:

Thornton Tomasetti
51 Madison Avenue
New York, NY 10010
Tel 917.661.7800

MEP / FP:

Concessi Engineering, PC
499 7th Avenue, 11th Floor South Tower
New York, NY 10018
Tel 212.629.6810

GEOTECH:

FNA Engineering Services, PC
670 Bergen Boulevard, Floor 2
Ridgefield, NJ 07657
Tel 201.241.2444

FACADE:

Simpson Gumpertz & Heger
550 7th Avenue, 10th Floor
New York, NY 10018
Tel 212.271.7000

CODE:

Metropolis
22 Courtland Street, 10th Floor
New York, NY 10007
Tel 212.233.6344

No.	Date	Issue
02	02.06.2019	DD ESTIMATING
01	11.20.2018	SCHEMATIC DESIGN

Project:

4790 BROADWAY
NEW YORK, NY 10034

Drawing Title:

ABBREVIATIONS
SYMBOLS & LEGENDS

Seal & Signature:

DATE (MM-DD-YY): 02-05-2019
PROJECT No.:
DRAWING BY: ...
CHK BY: ...
DWG No.: G-002.00
CADD FILE No.:

GENERAL NOTES

1. ALL CONSTRUCTION SHALL BE IN ACCORDANCE WITH THE RULES AND REGULATIONS OF THE NEW YORK CITY BUILDING CODE 2014.
2. THE OWNER SHALL BE RESPONSIBLE FOR THE SAFE MAINTENANCE OF THE BUILDING AND ITS FACILITIES (ARTICLE 301 THRU ARTICLE 304).
3. ALL MATERIALS, ASSEMBLIES, FORMS AND METHODS OF CONSTRUCTION AND SERVICE EQUIPMENT SHALL MEET THE FOLLOWING REQUIREMENTS (BC §28–113.2.6):
4. AT LEAST 24, BUT NO MORE THAN 48 HOURS, WRITTEN NOTICE SHALL BE GIVEN TO THE COMMISSIONER BEFORE COMMENCEMENT OF WORK. (BC 3304.3.1)
5. WITHIN TEN DAYS PRIOR TO THE START OF WORK A WRITTEN NOTICE SHALL BE GIVEN TO ADJOINING LOT OWNER AFFECTED BY FOUNDATION, EARTHWORK OR DEMOLITION WORK. WORK. (BC 3304.3.2)
6. NO WORK TO BE DONE BEYOND THE BUILDING LINES WITHOUT APPROVAL OF THE DEPARTMENT OF HIGHWAYS.
7. SIDEWALKS TO BE LAID IN ACCORDANCE WITH RULES OF THE DEPARTMENT OF HIGHWAYS.
8. BORING DIAGRAM WILL BE FILED BEFORE CONSTRUCTION IS STARTED AS PER BC 1802.
9. AN ACCURATE AND COMPLETE FINAL SURVEY, MADE BY A LICENSED SURVEYOR SHALL BE SUBMITTED AFTER COMPLETION OF WORK SHOWING THE LOCATION OF NEW BUILD–ING ELEVATION OF FIRST FLOOR, FINISHED GRADES OF OPEN SPACES ESTABLISHED CURB LEVEL, LOCATION AND BOUNDARIES OF LOT. (BC §28–118.4)
10. ALL ELEVATIONS SHALL REFER TO THE DATUM IN USE BY THE DEPARTMENT OF HIGHWAYS, BOROUGH PRESIDENT OF MANHATTAN WHICH IS 2.75 ABOVE THE U.S. COAST AND GEODETIC SURVEY DATUM OF MEAN SEA LEVEL AT SANDY HOOK. (BC §28–104.7.6)
11. WRITTEN DIMENSIONS ON THESE DRAWINGS SHALL HAVE PRECEDENCE OVER SCALED DIMENSIONS.
12. CONTRACTOR SHALL VERIFY AND BE RESPONSIBLE FOR ALL DIMENSIONS AND CONDITIONS ON THE JOB AND ARCHITECTS OFFICE MUST BE NOTIFIED OF ANY VARIATION FROM THE DIMENSIONS SHOWN BY THESE DRAWINGS.
13. ALL CONSTRUCTION, DIMENSIONS AND DETAILS SHALL CONCUR WITH AND BE DETERMINED FROM THESE DRAWINGS ONLY.
14. ALL MATERIALS AND CONSTRUCTION TO BE INCORPORATED IN THE WORK SHALL BE IN STRICT ACCORDANCE WITH THE LATEST EDITION OF THE ASTM SPECIFICATIONS APPLICABLE, AND TO CONFORM TO THE STANDARDS AND RECOMMENDATIONS OF THE VARIOUS TRADE INSTITUTES (A.C.I., A.I.S.C.ETC.) WHERE APPLICABLE. ALL MATERIALS INCORPORATED INTO THE WORK SHALL BE NEW.
15. CONTRACTORS SHALL BE RESPONSIBLE FOR ADEQUATELY BRACING AND PROTECTING ALL WORK DURING CONSTRUCTION AGAINST DAMAGED, BREAKAGES, COLLAPSE, DISTORTIONS AND OFF–ALIGNMENT ACCORDING TO APPLICABLE CODES, STANDARDS AND GOOD PRACTICE.
16. CONSTRUCTION SHALL COMPLY WITH ALL FEDERAL, STATE AND LOCAL CODES, ORDINANCES, RULES AND REGULATIONS PERTAINING TO LABOR AND MATERIALS.
17. ALL NOTES HEREIN MENTIONED WITH THOSE ON THE VARIOUS DRAWINGS, SHALL APPLY TO ALL DRAWINGS AND FORM PART OF THE CONTRACT.
18. EACH CONTRACTOR WILL BE HELD STRICTLY RESPONSIBLE FOR HIS WORK. ANY DISCREPANCIES IN THE PLANS OR DETAILS SHALL BE CALLED TO THE ATTENTION OF THE ARCHITECT.
19. POSTED OCCUPANCY AND USE, ALL BUILDING SHALL BE POSTED WITH A SIGN IN A FORM PRESCRIBED BY THE DEPARTMENT, PERMANENTLY AFFIXED, PLACED IN A CONSPICUOUS LOCATION IN PUBLIC HALL OR CORRIDOR, STATING, LIVE LOADS AND OCCUPANT LOADS IN THE BUILDING AND ALL PARTS THEREOF. OCCUPANCY GROUP R–3 IS EXEMPTED FROM THIS REQUIREMENT. (BC §28–118.19)
20. ALL MATERIALS, ASSEMBLIES AND METHODS OF CONSTRUCTION REGULATED BY THE CODE AND NOT LISTED ABOVE SHALL BE SUBJECT TO SEMI–CONTROLLED INSPECTION BY THE PERSON SUPERINTENDING THE CONSTRUCTION. SIGNED COPIES OF ALL TEST AND INSPECTION REPORTS SHALL BE FILED THROUGH THE ARCHITECT WITH THE DEPARTMENT OF BUILDINGS.
21. ALL MATERIALS AND ASSEMBLIES REQUIRED TO HAVE A FIRE RESISTANCE RATING SHALL COMPLY WITH ONE OF THE FOLLOWING: A. IT SHALL CONFORM WITH NFPA 251 "FIRE RESISTANCE RATINGS" OR, B. IT SHALL HAVE BEEN TESTED IN ACCORDANCE WITH ASTM E–119–2000, "STANDARD METHODS OF FIRE TESTS OF BUILDING CONSTRUCTION AND MATERIALS" AND ACCEPTED BY THE COMMISSIONER, OR C. IT SHALL HAVE BEEN ACCEPTABLE PRIOR TO THE EFFECTIVE DATE OF THE CODE.
22. WHERE PIPES, WIRES, CONDUITS, DUCTS, ETC., PIERCE FIRE PROTECTION OF INDIVIDUALLY ENCASED STRUCTURAL MEMBERS, SUCH PENETRATION SHALL NOT EXCEED 2 PERCENT OF ANY ONE FACE SUCH PROTECTION, AND SHALL BE CLOSED OFF WITH CLOSE FITTING METAL ESCUTCHEONS OR PLATES. (BC 714.3)
23. LINTELS SUPPORTING MASONRY WALLS OVER 4 FEET IN WIDTH SHALL BE FIRE PROTECTED WITH MATERIALS HAVING THE REQUIRED FIRE RESISTANCE–RATING OF THE WALL SUPPORTED. (BC 714.6)
24. CEILINGS THAT CONTRIBUTE TO THE REQUIRED FIRE RESISTANCE RATING OF A FLOOR OR ROOF ASSEMBLY SHALL BE CONTINUOUS BETWEEN FIRE DIVISIONS, FIRE SEPARATIONS OR VERTICAL PARTITIONS HAVING THE SAME FIRE RESISTANCE RATING AS THE CEILING. CONCEALED SPACE ABOVE SUCH CEILING, UNLESS SPRINKLED, SHALL BE FIRE–STOPPED AS PER SECTION BC 717 "CONCEALED SPACES".
25. OPENING PROTECTIVES INCLUDING FRAMES, SELF–CLOSING DEVICES AND HARDWARE, SHALL COMPLY WITH NFPA 252–99 "STANDARD METHODS OF FIRE TEST OF DOOR ASSEMBLIES" AND NFPA 257–00 "STANDARD METHODS OF FIRE TEST OF WINDOW AND GLASS BLOCK ASSEMBLIES" AND SHALL BE INSTALLED AND MAINTAINED IN ACCORDANCE WITH NFPA 257–00 "INSTALLATION OF FIRE DOORS AND WINDOW". OPENING PROTECTIVES SHALL BE LABELED CERTIFYING PERFORMANCE RATING, AND SHALL HAVE BEEN ACCEPTED BY THE COMMISSIONER.
26. ROOF SHALL BE COVERED WITH CLASS "A" ROOF COVERING MEETING THE REQUIREMENTS OF ASTM–E108 "STANDARD METHODS OF FIRE TESTS OF ROOF COVERINGS" – 2000, OR "FIRE CLASSIFICATIONS". (BC 1505)
27. FIRESTOPPING: CONCEALED SPACES WITHIN PARTITIONS, WALLS, FLOORS, ROOFS, STAIRS, FURRING PIPE SPACES, COLUMN ENCLOSURES, ETC. SHALL BE FIRESTOPPED (EXCEPT WHERE CONCEALED SPACED IS SPRINKLED OR IS CONSTRUCTED AS A SHAFT) AS PER BC 717 "CONCEALED SPACES".
28. INTERIOR FINISH: MATERIALS SHALL BE CLASSIFIED IN ACCORDANCE WITH THE SURFACE FLAME–SPREAD RATING OBTAINED AS PRESCRIBED IN ASTM E–84–2001 "STANDARD METHOD OF TEST FOR SURFACE BURNING CHARACTERISTICS OF BUILDING MATERIALS" AS PER BC802.
29. ALL EXITS SHALL BE KEPT READILY ACCESSIBLE AND UNOBSTRUCTED AT ALL TIMES.
30. STAIRS SHALL HAVE HANDRAILS ON EACH SIDE (EXCEPT THAT STAIRS LESS THAN 44 INCHES IN WIDTH), HAVING FINGER CLEARANCE OF 1 1/2 INCHES, PROJECTING NOT MORE THAN 3 1/2 INCHES INTO THE REQUIRED STAIR WIDTH.
31. HEIGHT OF HANDRAIL SHALL BE BETWEEN 28" AND 34" ABOVE THE TREAD NOSING. HANDRAILS SHALL BE RETURNED TO WALLS AND POSTS AT THEIR TERMINATION. MATERIALS OF HANDRAILS SHALL HAVE A FLAME SPREAD RATING NOT EXCEEDING 150. HANDRAILS SHALL BE DESIGNED TO RESISTS A SIMULTANEOUS APPLICATION OF A LATERAL FORCE OF 40 PLF AND A VERTICAL LOAD OF 50 PLF. LANDINGS AND PLATFORMS SHALL BE ENCLOSED ON SIDES BY WALL OR RAILINGS,AT LEAST 3'–0"HIGH. RISERS SHALL BE MAXIMUM 7 3/4" HIGH,TREADS MINIMUM 9 1/2" WIDE EXCLUSIVE OF NOSING AND THE SUM OF 2 RISERS PLUS ONE TREAD EXCLUSIVE OF NOSING SHALL BE NOT LESS THAN 24 OR MORE THAN 25 1/2".
32. TREAD STRINGERS AND LANDINGS SHALL BE BUILT OF/OR SURFACED WITH NONSKID MATERIALS.
33. VENTILATION OF EACH REQUIRED STAIR EXTENDING TO THE ROOF WILL COMPLY WITH BC 910.5.
34. ILLUMINATION OF AT LEAST 2 FOOT CANDLES MEASURED AT THE FLOOR LEVEL SHALL BE MAINTAINED CONTINUOUSLY IN EXITS, EXIT DISCHARGES, AND IN PUBLIC CORRIDORS. IT SHALL NOT BE LESS THAN 1 FOOT CANDLE AT THE FLOOR LEVEL EXIT COMPONENTS OTHER THAN PUBLIC CORRIDORS. (BC 1006.2)
35. EXIT LIGHTING SHALL CONFORM TO SECTION BC 1006 "MEANS OF EGRESS ILLUMINATION".
36. LOCATION OF EVERY EXIT ON EVERY FLOOR SHALL BE CLEARLY INDICATED BY EXIT SIGNS READILY VISIBLE FROM ANY DIRECTION OF EGRESS TRAVEL. INSTALL DIRECTIONAL SIGNS TO SERVE AS GUIDE FROM ALL PORTIONS OF THE CORRIDOR OR FLOOR, SIGNS SHALL BE ON SEPARATE CIRCUITS, TAKEN OFF AHEAD OF THE MAIN SWITCH. (BC 1011) OCCUPANCY CLASS R–2 IS EXEMPTED FROM THE REQUIREMENT.
37. EXIT SIGNS SHALL BE INTERNALLY LIGHTED AT ALL TIMES AND SHALL BE LISTED AND LABELED AND SHALL BE INSTALLED IN ACCORDANCE WITH THE MANUFACTURER'S INSTRUCTIONS AND SECTION 2702. LETTERS SHALL BE RED NOT LESS THAN 6" HIGH. (BC 1011.4)
38. REQUIRED FOR MULTIPLE DWELLINGS, BUILDING ENTRANCE DOORS AND OTHER EXTERIOR DOORS SHALL BE PROVIDED WITH HEAVY DUTY LOCK SETS WITH AUXILIARY LATCH BOLTS TO PREVENT THE LATCH FROM BEING MANIPULATED BY OTHER THAN A KEY.
39. DOORS TO DWELLING UNITS SHALL BE REQUIRED WITH A HEAVY DUTY DEAD BOLT OR OPERABLE BY KEY FROM OUTSIDE AND THUMB TURN FROM INSIDE AND A CHAIN DOOR GUARD.
40. ALL INTERIOR TOILETS SHALL BE MECHANICALLY VENTILATED IN ACCORDANCE WITH SECTION BC 1203.4.1.3 OF THE BUILDING CODE.
41. ALL ELEVATOR DOORS SHALL HAVE ELECTRIC INTERLOCKS IN ACCORDANCE WITH BC 3002.1.2.
42. SUSPENDED CEILINGS SHALL COMPLY WITH SECTION BC 803.9.1.1, WITH METAL HANGERS, PURLINS AND RUNNERS AS REQUIRED.
43. ALL DOORS TO REQUIRED EXIT STAIRS IN R–2 SHALL COMPLY WITH BC 1008.1.1.
44. DOORS AND ASSEMBLIES SHALL HAVE THE FOLLOWING FIRE RESISTIVE RATINGS, (BC 708) DOORS TO STAIRS 1 1/2 HOUR, EXCEPT WHERE OTHERWISE NOTED. DOORS TO ELEVATOR SHAFT 1 1/2 HOUR.
45. CORRIDORS AND EXIT PASSAGEWAYS SHALL HAVE A MIN. CLEAR HEIGHT OF 7'–6" FOR AT LEAST 50% OF THE FLOOR AREA WITH NO POINT LESS THAN 7 FT. IN HEIGHT, PROJECTION BELOW THE CEILING SHALL NOT OBSTRUCT FULL VIEW OF EXIT SIGNS. (BC 1003)
46. ELEVATOR SHAFTS SHALL BE ENCLOSED WITH IMPACT RESISTANT CONSTRUCTION FOR 2 HOUR FIRE RATING IN ACCORDANCE WITH NEW YORK CITY BUILDING CODE. (BC 403.9.2, BC 707.1, BC 707.14, & CHAPTER 30)
47. INTERIOR REQUIRED STAIR SHALL BE ENCLOSED WITH 2 HOUR FIRE RATING IN ACCORDANCE WITH NEW YORK CITY BUILDING CODE. (BC 1019.1)
48. ALL VENT DUCT SHAFTS SHALL BE ENCASED WITH 1 AND 2 HOUR ENCLOSURE. NO DUCT VENTS TO PASS THROUGH STAIR ENCLOSURES. 1 1/2 HOUR AUTOMATIC SELF–CLOSING FIRE DAMPERS TO BE INSTALLED IN VENT DUCTS WHEN THEY PIERCE PUBLIC CORRIDORS.
49. MASONRY MATERIALS SHALL CONFORM TO THE REQUIREMENTS OF BC 2103 AND TO COMPLY WITH BC 1704.5 FOR CERTIFICATION.
50. ALL MASONRY NON–LOAD BEARING WALLS SHALL BE BONDED IN ACCORDANCE WITH BC 2109.6.
51. EXTERIOR MASONRY WALLS SHALL COMPLY WITH BC 2109.
52. ALL EXTERIOR MASONRY WALL WILL BE LAID UPON ONE PART PORTLAND CEMENT, ONE PART LIME AND SIX PARTS SAND. ALL MORTAR TO COMPY WITH BC 2109.
53. CONCRETE BLOCK SHALL COMPLY WITH BC 2103.
54. ALL CORNERS OF PARAPET WALLS SHALL CONFORM WITH BC 2109.5.5.
55. WHERE GLASS FACING IS USED, THICKNESS AND AREA COMPLIES WITH BC 2401.
56. INTERIOR WALLS, PARTITIONS, FLOOR AND CEILING CONSTUCTION AND MECHANICAL EQUIPMENT SHALL BE DESIGNED AND CONSTRUCTED IN ACCORDANCE WITH BC 1207 TO PROVIDE MIN. PROTECTION FOR EACH DWELLING UNIT FROM EXTRANEOUS NOISES EMANATING FROM OTHER DWELLING UNITS AND FROM MECHANICAL EQUIPMENT IN ADDITION, EXTERIOR MECHANICAL EQUIPMENT SHALL CONFORM TO THE NOISE REDUCTION REQUIREMENTS OF TABLE 1207.2.1.
57. FIRE RATED PARTITIONS SHALL REST DIRECTLY UPON THE CONCRETE FLOOR CONSTRUCTION AND SHALL EXTEND TO THE CONCRETE CONSTRUCTION OF THE FLOOR OR ROOF ABOVE.
58. PIPE SPACE AND WALL FURRINGS SHALL CONSIST OF METAL CHANNELS AND 5/8" GYPSUM WALLBOARD EXCEPT AS OTHERWISE SHOWN.
59. A MINIMUM CEILING HEIGHT OF 8'–0" SHALL BE MAINTAINED IN ALL LIVING ROOMS.
60. WALLS, PARTITIONS AND FLOOR AND CEILING CONSTRUCTION–MIN.STC RATING 50 FOR AIRBORNE NOISE, MIN.35 STC RATING REQUIRED FOR APARTMENT ENTRANCE DOORS.
61. SPRINKLER SYSTEM SHALL COMPLY WITH BC 1704.21 SEPARATE SPRINKLER APPLICATION SHALL BE FILED AND APPROVAL OBTAINED.
62. STANDPIPE WILL BE INSTALLED IN ACCORDANCE WITH BC 1704.22. SEPARATE STANDPIPE APPLICATION WILL BE FILED.
63. SEPARATE ELEVATOR APPLICATION WILL BE FILED.
64. VIEWING MIRRORS SHALL BE PROVIDED IN ELEVATORS AS PER SECTION D26–20.03 H.M.C.
65. MECHANICAL VENTILATION, AIR CONDITIONING AND REFRIGERATION
    - 65.1. ALL FINAL INSPECTION AND TESTS OF A REQUIRED VENTILATING SYSTEM SHALL BE MADE (THE ARCHITECT OR ENGINEER NEED NOT TO BE IN THE EMPLOY OF THE OWNER) AS PER BC 1704.15.
    - 65.2. ALL INSPECTION AND TEST OF A REFRIGERATION SYSTEM SHALL BE MADE (THE ARCHITECT OR ENGINEER NEED NOT TO BE IN THE EMPLOY OF THE OWNER) AS PER BC 1704.15.
66. HEATING AND COMBUSTION EQUIPMENT
    - 66.1. ALL FINAL INSPECTIONS AND TESTS FOR BOILERS SHALL BE SUBJECT TO THE PROVISIONS FOR CONTROLLED INSPECTION (SUCH INSPECTIONS AND TESTS, HOWEVER, MAY BE MADE BY DEPARTMENT INSPECTORS OR BY A DULY AUTHORIZED INSURANCE COMPANY INSPECTOR) PER BC 1704.23.
    - 66.2. ALL APPLICATIONS FOR EQUIPMENT USE PERMIT FOR HEATING SYSTEMS SHALL BE ACCOMPANIED BY A SIGNED STATEMENT BY AN ARCHITECT OR ENGINEER STATING THAT THE SYSTEM HAS BEEN OPERATED AND FUNCTIONS SATISFACT–ORY AND THAT TO THE BEST OF HIS KNOWLEDGE AND BELIEF THE SYSTEM WILL MEET THE CODE TEMPERATURE REQUIREMENTS PER BC 1704.23.
67. FIRE EXTINGUISHING EQUIPMENT
    - 67.1. PER BC 1704.22 INSPECTIONS AND TESTS OF STANDPIPES ARE SUBJECT TO CONTROLLED INSPECTION, IF APPLCANT DOES NOT CHOOSE TO HAVE TESTS WITNESSED BY REPRESENTATIVE OF DEPARTMENTS.
    - 67.2. PER BC 1704.21 INSPECTIONS AND TEST OF SPRINKLER SYSTEMS ARE SUBJECT TO CONTROLLED INSPECTION, IF APPLICANT DOES NOT CHOOSE TO HAVE TESTS WITNESSED BY REPRESENTATIVE OF DEPARTMENTS.
68. INSPECTION DURING PROGRESS OF WORKS
    - 68.1. THE COMMISSIONER MAY ACCEPT SIGNED STATEMENTS BY ARCHITECTS AND ENGINEERS AND SUPPORTING INSPECTIONS AND TESTS REPORTS WITHOUT VERIFYING INSPECTION OR TEST BY DEPARTMENT INSPECTORS PER ARTICLE 116.
69. ALL PERMITS ISSUED BY THE DEPARTMENT OF BUILDINGS SHALL BE POSTED IN A CONSPICUOUS PLACE OPEN TO THE PUBLIC INSPECTION FOR THE ENTIRE TIME OF THE PROSECUTION OF THE WORK OF THE USE AND OPERATION OF THE EQUIPMENT OR UNTIL THE EXPIRATION OF THE PERMIT.
70. A REFUSE STORAGE ROOM SHALL BE PROVIDED IN COMPLIANCE WITH SECTION 81 OF THE NY STATE MULTIPLE DWELLING LAW ,SECTION 27–2021 OF THE NYC HOUSING MAINTENANCE CODE, AND BC 707.13. IT SHALL BE COMPLETELY ENCLOSED IN A FIRE–RESISTANCE RATING OF 2 HR., WITH SELF–CLOSING PROTECTIVES HAVING A FIRE PROTECTION RATING OF 1 1/2 HR. (BC 1213.1)
71. REFUSE COLLECTING ROOM SHALL BE SPRINKLED.
72. THE COMPACTING MACHINE SHALL BE LOCATED WITHIN THE REFUSE STORAGE ROOM OR IN A REFUSE CHUTE TERMINATION ROOM. (BC 1213.2)
73. COMPACTING EQUIPMENT SHALL MEET THE CRITERIA ND THE APPROVAL OF THE ENVIRONMENTAL PROTECTION ADMINISTRATION AND ALSO MUST MEET ALL THE REQUIREMENTS OF ANY OTHER AUTHORITY HAVING JURISDICTION.
74. REFUSE CHUTE SHALL BE CONSTRUCTED STRAIGHT AND PLUMB WITHOUT PROJECTIONS OF ANY KIND SUPPORTED ON 2 HR. FLOOR CONSTRUCTION. (BC 707.13.1)
75. REFUSE CHUTE SHALL BE CONSTRUCTED IN ACCORDANCE WITH ALL APPLICABLE RULES AND REGULATIONS OF THE DEPARTMENT OF BUILDINGS AND ANY OTHER AUTHORITY HAVING JURISDICTION.
76. REFUSE CHUTE SHALL EXTEND THROUGH ROOF CONSTRUCTION AT LEAST 6'–0" ABOVE THE ROOF. (BC 707.5)
77. INSPECTION OF REQUIRED SPRINKLERS SHALL COMPLY WITH D26–21.07.
78. JANITORIAL SERVICES TO COMPLY WITH D 26–22.03.
79. OBLIGATIONS OF THE OWNER SHALL COMPLY WITH D 26–22.03.
80. CENTRAL HEAT, ELECTRIC OR GAS HEATING SYSTEM SHALL COMPLY WITH D 26–17.01. THE SUPPLY OF HOT WATER SHALL COMPLY WITH D 26–17.07.
81. PUBLIC HALL LIGHTING SHALL COMPLY WITH ARTICLE 14 ARTICLE 19 HMC.
82. MAIL SERVICE WILL BE PROVIDED IN ACCORDANCE WITH D26–21.05–D26–21.01 HMC.
83. STREET NUMBERS WILL BE PROVIDED IN ACCORDANCE WITH D 26–21.05.
84. FLOOR NUMBERS TO BE PROVIDED IN ACCORDANCE WITH D 26–21.05.
85. FLOOR NUMBERS TO BE PROVIDED ON ALL FLOORS IN STAIR HALL AND AT ELEVATOR LANDINGS IN ACCORDANCE WITH SECTION D26–21.03 AND RULES OF THE DEPARTMENT OF BUILDINGS.
86. ALL DUCT SHAFT OFFSETS SHALL BE ENCASED WITH 1 & 2 HOUR FIRE RATING.
87. PROVIDE CARBON MONOXIDE ALARM AND DETECTORS WITHIN APARTMENTS AS REQUIRED PER BC 908.7.1 AND 607.2.3 OF THE NYC MECHANICAL CODE.
88. PROVIDE SMOKE DETECTORS WITHIN APARTMENTS AS REQUIRED PER BC 716, D6–20.08 AND 607.2.3 OF THE NYC MECHANICAL CODE.
89. RADIO AND TV WIRES AND ANTENNA SHALL COMPLY WITH SECTION 62 M.D.L. AND SHALL BE PLACED A MIN. OF 10'–0" ABOVE HIGHEST POINT ON ROOF.
90. BUILDING TO BE RATPROOFED IN ACCORDANCE WITH SECTION 80 M.D.L.
91. ALL CLEANING OF WINDOWS WILL BE IN CONFORMITY WITH THE WINDOW CLEANING CODE.
92. FIREPROOFING
    - 92.1. THE OCCUPANCY CLASSIFICATION OF THE BUILDING IS OCCUPANCY GROUP (O.G.) R–2, BC 310.1.2 AND CLASS "A" MULTIPLE DWELLING AS PER SECTION 4.8 M.D.L.
    - 92.2. THE VARIOUS OCCUPANCIES REQUIRED TO BE SEPARATED FROM EACH OTHER BY FIRE SEPARATING OR DIVISIONS AS PER BC 302.1 SHALL BE SO SEPARATED BY PARTITIONS HAVING THE REQUIRED FIRE RATING IN ACCORDANCE WITH BC 5008.3.3.
    - 92.3. THE CONSTRUCTION CLASSIFICATION OF THE BUILDING IS CONSTRUCTION GROUP R–2 NON–COMBUSTIBLE TYPE 1B AND BC 602 IN ACCORDANCE WITH AREA AND HEIGHT LIMITATIONS AS SPECIFIED IN TABLE 503 AND BC 503. THE CONSTRUCTION ELEMENTS SHALL BE OF THE REQUIRED MINIMUM FIRE RESISTANCE RATINGS AS OUTLINED IN TABLE 601 AND DEFINED IN BC 602.
93. EXIT DOORS SHALL BE READILY OPENABLE AT ALL TIMES FROM THE SIDE WHICH EGRESS IS TO BE MADE. DOORS OPENING INTO INTERIOR ENCLOSED STAIR SHALL NOT BE LOCKED FROM EITHER SIDE EXCEPT THAT DOORS MAY BE LOCKED TO PREVENT ACCESS TO THE STAIR FROM THE OUTDOORS AT THE STREET LEVEL.
94. ALL WIRE GLASS IN RATED DOORS AND WINDOWS WILL BE OF A TYPE APPROVED BY THE B.S.A.
95. FIRE DIVISION SHALL COMPLY WITH PROVISIONS OF TABLE 508.3.3 AND SHALL BE CONTINUOUS THROUGH ANY CONCEALED SPACE IN FLOOR OR ROOF CONSTRUCTION.
96. DIFFERENT TENANT STORES, APARTMENTS, ETC., NOT SEPARATED BY FIRE DIVISIONS SHALL BE SEPARATED BY FIRE SEPARATIONS, BUT NOT LESS THAN 1 HOUR SEPARATIONS SHALL CONTINUE THROUGH CONCEALED SPACES ABOVE. (TABLE 508.3.3) 5/8" SHEETROCK FIRE CODE GYPSUM WALLBOARD EACH SIDE OVER 1" GYPSUM COREBOARD.
97. OPENINGS IN FIRE DIVISIONS AND SEPARATIONS TO COMPLY WITH TABLE 508.3.3.
98. NO CONDUITS, PIPES, MEDICINE CABINETS, ETC. SHALL ENCROACH ON PARTITIONS ENCLOSING STAIRS OR ELEVATOR SHAFTS OR OTHER RATED PARTITIONS.
99. CONDUITS IN FIRE–RATED PARTITIONS WILL NOT EXCEED 3/4 INCH DIAMETER OUTLETS IN SUCH PARTITIONS WILL BE BACKED UP WITH APPROVED MATERIALS.
100. PENETRATION OF OPENINGS IN WALLS, PARTITIONS, OR FLOORS FOR PIPE SLEEVES, MEDICINE CABINETS, HAMPERS ELECTRIC DEVICES, ETC., SHALL BE PACKED & SEALED.
101. ALL VENT DUCT SHAFTS TO BE ENCLOSED WITH 1 OR 2 HOUR ENCLOSURES. NO DUCT VENTS TO PASS THROUGH STAIR ENCLOSURES. 1 1/2 HOUR AUTOMATIC SELF–CLOSING FIRE DAMPERS TO BE INSTALLED IN VENT DUCTS WHEN THEY PIERCE PUBLIC CORRIDORS.
102. FIRE PREVENTION APPLICATIONS WILL BE FILED IF REQUIRED FOR ALL INSTALLATIONS.
103. WOOD REQUIRED TO BE FIRE–RETARDANT–TREATED SHALL BE TESTED IN ACCORDANCE WITH ASTM E84–2001.
104. INTERIOR FINISH TO HAVE FLAME SPREAD INDEX NOT GREATER THAN THAT SPECIFIED IN TABLE 803.5, AND ALL INTERIOR FINISH TO COMPLY WITH BC 803.1 AND 803.5.
105. ALL COMBUSTIBLE FLOORING SHALL CONFORM WITH THE REQUIREMENTS OF BC 804.4.1 THRU 804.4.4.
106. FINISH FLOORING IN ALL EXITS SHALL BE OF NON–COMBUSTIBLE MATERIALS (BC 804.5)
107. ALL DWELLING UNITS TO BE HANDICAPPED ADAPTABLE

THIRD PARTY INSPECTIONS

1. CONTROLLED INSPECTIONS AND ALL RELATED ENGINEERING AND TESTING SERVICES SHALL BE OBTAINED BY THE CONTRACTOR FOR THE FOLLOWING AREAS OF WORK: SEE ALSO STRUCTURAL AND MEP DRAWINGS.

NEW BUILDING APPLICATION – SPECIAL INSPECTION ITEMS

A.	CONCRETE – CAST IN PLACE	BC1704.4
B.	CONCRETE – DESIGN MIX	BC1905.3, BC1913.5
C.	CONCRETE – SAMPLING AND TESTING	BC1905.6, BC1913.10
D.	MASONRY	BC1704.5
E.	POST–INSTALLED ANCHORS	BC1704.32
F.	FOOTING AND FOUNDATION	BC110.3.1
G.	STRUCTURAL COLD–FORMED STEEL	BC1704.3.4
H.	EXCAVATIONS	BC1704.20.3
I.	UNDERPINNING	BC1704.20.3, BC1814
J.	SUBGRADE INSPECTION	BC1704.7.1
K.	STRUCTURAL STABILITY – EXISTING BUILDINGS	BC1704.20.1
L.	SMOKE CONTROL SYSTEMS	BC1704.15
M.	MECHANICAL SYSTEMS	BC1704.16
N.	FUEL–OIL STORAGE AND FUEL–OIL PIPING SYSTEMS	BC1704.17
O.	HIGH–PRESSURE STEAM PIPING (WELDING)	BC1704.19
P.	HEATING SYSTEMS	BC1704.25
Q.	FIRE–RESISTANT PENETRATIONS AND JOINTS	BC110.3.5
R.	FINAL	28–116.2.4.2, BC110.5, DIRECTIVE 14 OF 1975, AND 1 RCNY §101–10

PROGRESS INSPECTION ITEMS

A.	FOOTING AND FOUNDATION	BC109.3.4
B.	ENERGY CODE COMPLIANCE INSPECTIONS	BC109.3.5 (TR8)
C.	FIRE RESISTANCE RATED CONSTRUCTION	BC109.3.4

ENERGY CODE PROGRESS INSPECTION ITEMS

A.	HVAC AND SERVICE WATER HEATING EQUIP.	IB3, IIB3
B.	HVAC AND SERVICE WATER HEATING SYS. CONTROLS	IB4, IIB4
C.	HVAC INSULATION AND SEALING	IB5, IIB5
D.	DUCT LEAK TESTING	IB6, IIB6
E.	MAINTENANCE INFORMATION	ID1, IID1
F.	INTERIOR LIGHTING POWER	IIC3
G.	LIGHTING CONTROL	IIC5
H.	EXIT SIGN	IIC6
I.	VERIFY IN FIELD ALL EXISTING CONDITIONS AND CONTACT THE ARCHITECT WHEN A CONDITION IN THE FIELD DOES NOT COMPLY WITH THESE DOCUMENTS, INCLUDING ANY AND ALL DEVIATIONS OF DIMENSIONS SHOWN HERE–IN. THESE DEVIATIONS MUST BE BROUGHT TO THE ATTENTION OF THE ARCHITECT PRIOR TO INSTALLATION OF SAME.	

2. EQUIPMENT REQUIRING USE OF PERMITS SHALL BE INSPECTED AND TESTED TO DETERMINE PROPER FUNCTIONING AND COMPLIANCE WITH THE BUILDING CODE AND OTHER APPLICABLE LAWS AND REGULATIONS. ALL INSPECTIONS AND TESTS SHALL BE CONDUCTED IN ACCORDANCE WITH THE REQUIRED INSPECTION AND OF HEATING SYSTEM, A SIGNED STATEMENT BY ARCHITECT OR ENGINEER RETAINED BY THE CONTRACTOR SHALL TEST PROCEDURES AND SIGNED COPIES OF REQUIRED INSPECTIONS AND TEST BE SUBMITTED WITH THE PERMIT APPLICATION, STATING THAT THE SYSTEM HAS REPORTS SHALL BE FILED WITH THE DEPARTMENT OF BUILDINGS AND FORM BEEN OPERATED AND FUNCTIONS SATISFACTORILY, AND THAT TO THE BEST OF PART OF THE PAPERS ACCOMPANYING THE PERMIT APPLICATION. IN THE CASE HIS KNOWLEDGE AND BELIEF, THE SYSTEM WILL MEET THE CODE TEMPERATURE REQUIREMENT.

SMOKE DETECTING NOTES

1. SMOKE DETECTING DEVICES SHALL CONFORM TO SECTION 907.2.10.
2. REQUIRED SMOKE ALARMS SHALL RECEIVE THEIR PRIMARY POWER FROM A DEDICATED BRANCH CIRCUIT OR THE UNSWITCHED PORTION OF A BRANCH CIRCUIT ALSO USED FOR POWER AND LIGHTING, AND SHALL BE EQUIPPED WITH A BATTERY BACKUP. SMOKE ALARMS SHALL EMIT A SIGNAL WHEN THE BATTERIES ARE LOW. WIRING SHALL BE PERMANENT AND WITHOUT A DISCONNECTING SWITCH OTHER THAN AS REQUIRED FOR OVER–CURRENT PROTECTION, PER SEC 907.2.10.2.
3. WHEN THE INSTALLATION OF THE ALARM DEVICES IS COMPLETE, EACH DETECTOR AND INTERCONNECTING WIRING FOR MULTIPLE–STATION ALARM DEVICES SHALL BE TESTED IN ACCORDANCE WITH THE HOUSEHOLD FIRE WARNING EQUIPMENT PROVISIONS OF NFPA 72, AS PER SEC 907.2.10.3.
4. ALL SMOKE DETECTORS MUST BE INSTALLED IN EACH SLEEPING ROOM AND WITHIN 15'–0" OF THE ENTRANCE TO ANY SLEEPING ROOM, AS PER 907.2.10.1.1.
5. PROVIDE AND INSTALL AT LEAST ONE APPROVED CARBON MONOXIDE ALARM WITHIN FIFTEEN FEET OF THE PRIMARY ENTRANCE TO EACH SLEEPING ROOM.

EQUIPMENT MOUNTING HEIGHTS

Client:

RANGER PROPERTIES
4790 BROADWAY
NEW YORK, NY 10034

Architect:

FOGARTY FINGER
architecture | interiors

69 Walker St, New York, NY 10013
t 212 966 7450 f 212 966 7444

Structural:

Thornton Tomasetti
51 Madison Avenue
New York, NY 10010
Tel 917.661.7800

MEP / FP:

Concessi Engineering, PC
499 7th Avenue, 11th Floor South Tower
New York, NY 10018
Tel 212.629.6810

GEOTECH:

FNA Engineering Services, PC
670 Bergen Boulevard, Floor 2
Ridgefield, NJ 07657
Tel 201.241.2444

FACADE:

Simpson Gumpertz & Heger
550 7th Avenue, 10th Floor
New York, NY 10018
Tel 212.271.7000

CODE:

Metropolis
22 Courtland Street, 10th Floor
New York, NY 10007
Tel 212.233.6344

No.	Date	Issue
02	02.06.2019	DD ESTIMATING
01	11.20.2018	SCHEMATIC DESIGN

Project:

4790 BROADWAY
NEW YORK, NY 10034

Drawing Title:

GENERAL NOTES & DOB REQUIREMENTS

Seal & Signature:

DATE (MM–DD–YY): 02–05–2019
PROJECT No.:
DRAWING BY: –
CHK BY: –
DWG. No.: G–003.00
CADD FILE No.:

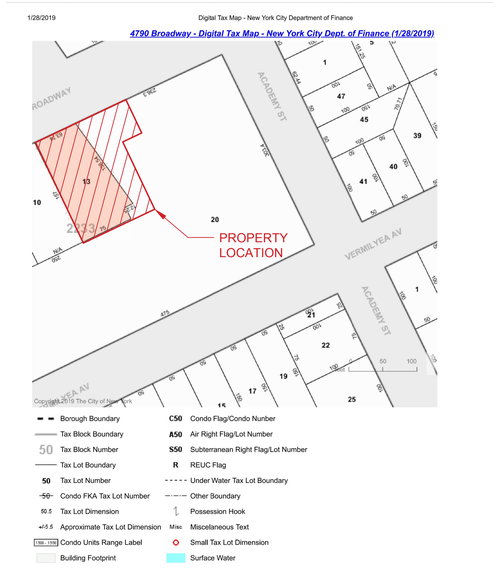

1 TAX MAP
SCALE: N.T.S.

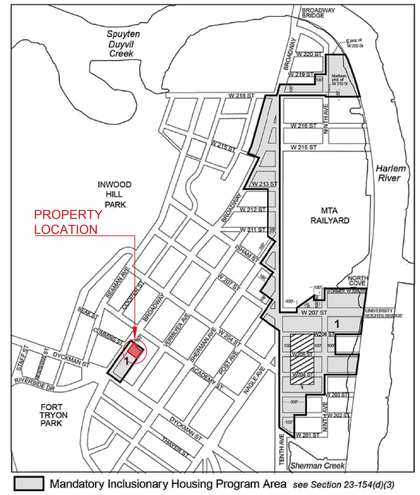

Portion of Community District 12, Manhattan

2 MIH PROGRAM AREA MAP
SCALE: N.T.S.

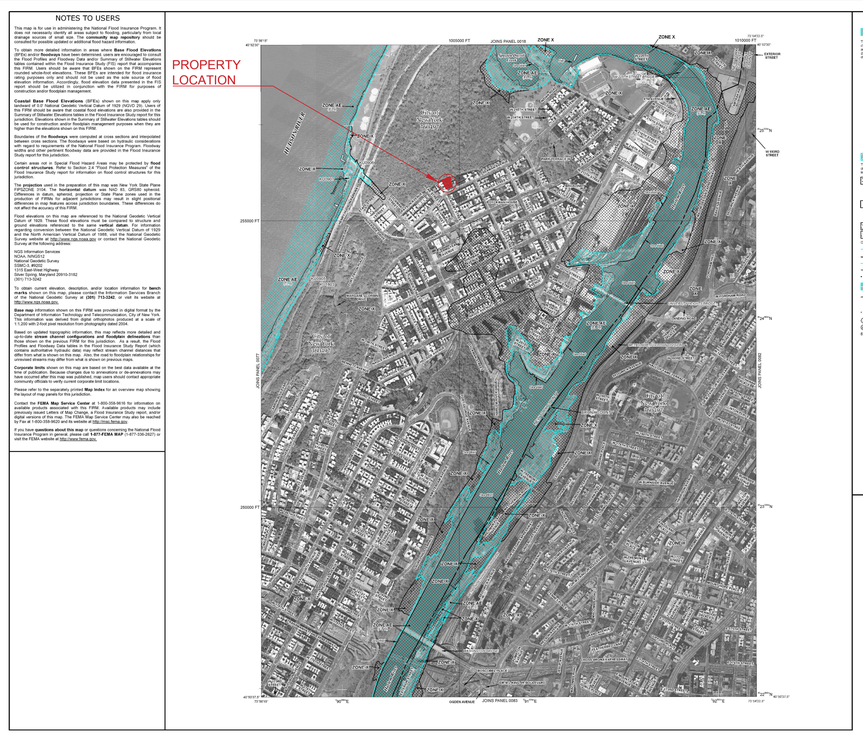

NOTE: 1. THE PREMISE IS CURRENTLY LOCATED IN ZONE 'X'. PROPERTY IS NOT SUBJECT TO FLOODING.

3 2007 FIRM BASE FLOOD ELEVATION
SCALE: N.T.S.

Click red outline on map to view diagram of adopted zoning change

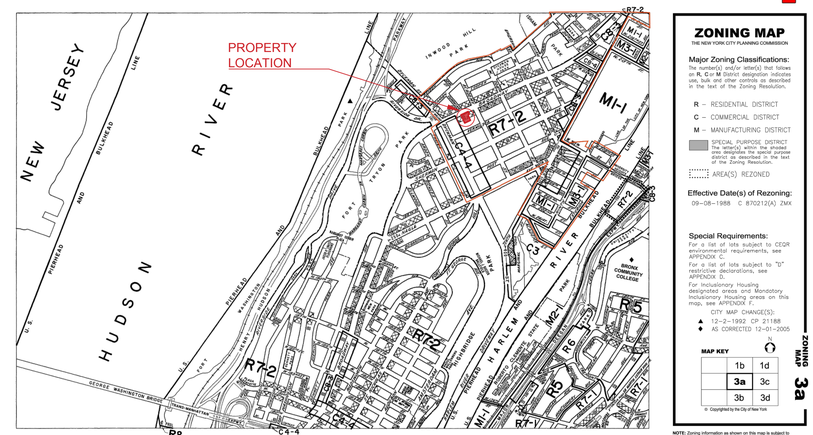

4 ZONING MAP - 1988
SCALE: N.T.S.

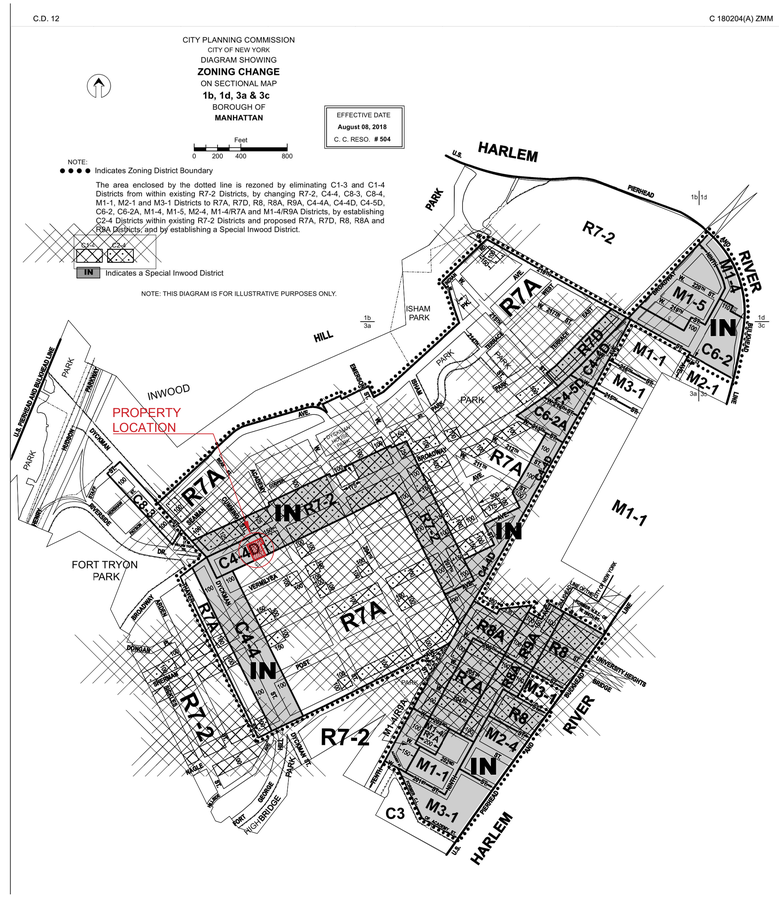

5 ZONING MAP / ADOPTED ZONING CHANGE - 2018
SCALE: N.T.S.

Client:

RANGER PROPERTIES
4790 BROADWAY
NEW YORK, NY 10034

Architect:

FOGARTY FINGER architecture | interiors
69 Walker St, New York, NY 10013
t 212 966 7450 f 212 966 7444

Structural:

Thornton Tomasetti
51 Madison Avenue
New York, NY 10010
Tel 917.661.7800

MEP / FP:

Concessi Engineering, PC
499 7th Avenue, 11th Floor South Tower
New York, NY 10018
Tel 212.629.6810

GEOTECH:

FNA Engineering Services, PC
670 Bergen Boulevard, Floor 2
Ridgefield, NJ 07657
Tel 201.241.2444

FACADE:

Simpson Gumpertz & Heger
550 7th Avenue, 10th Floor
New York, NY 10018
Tel 212.271.7000

CODE:

Metropolis
22 Courtland Street, 10th Floor
New York, NY 10007
Tel 212.233.6344

No.	Date	Issue
02	02.06.2019	DD ESTIMATING
01	11.20.2018	SCHEMATIC DESIGN

Project:

4790 BROADWAY
NEW YORK, NY 10034

Drawing Title:

MAPS

Seal & Signature:

DATE (MM-DD-YY): 02-05-2019
PROJECT No.:
DRAWING BY: –
CHK BY: –
DWG. No.: G-004.00
CADD FILE No.:

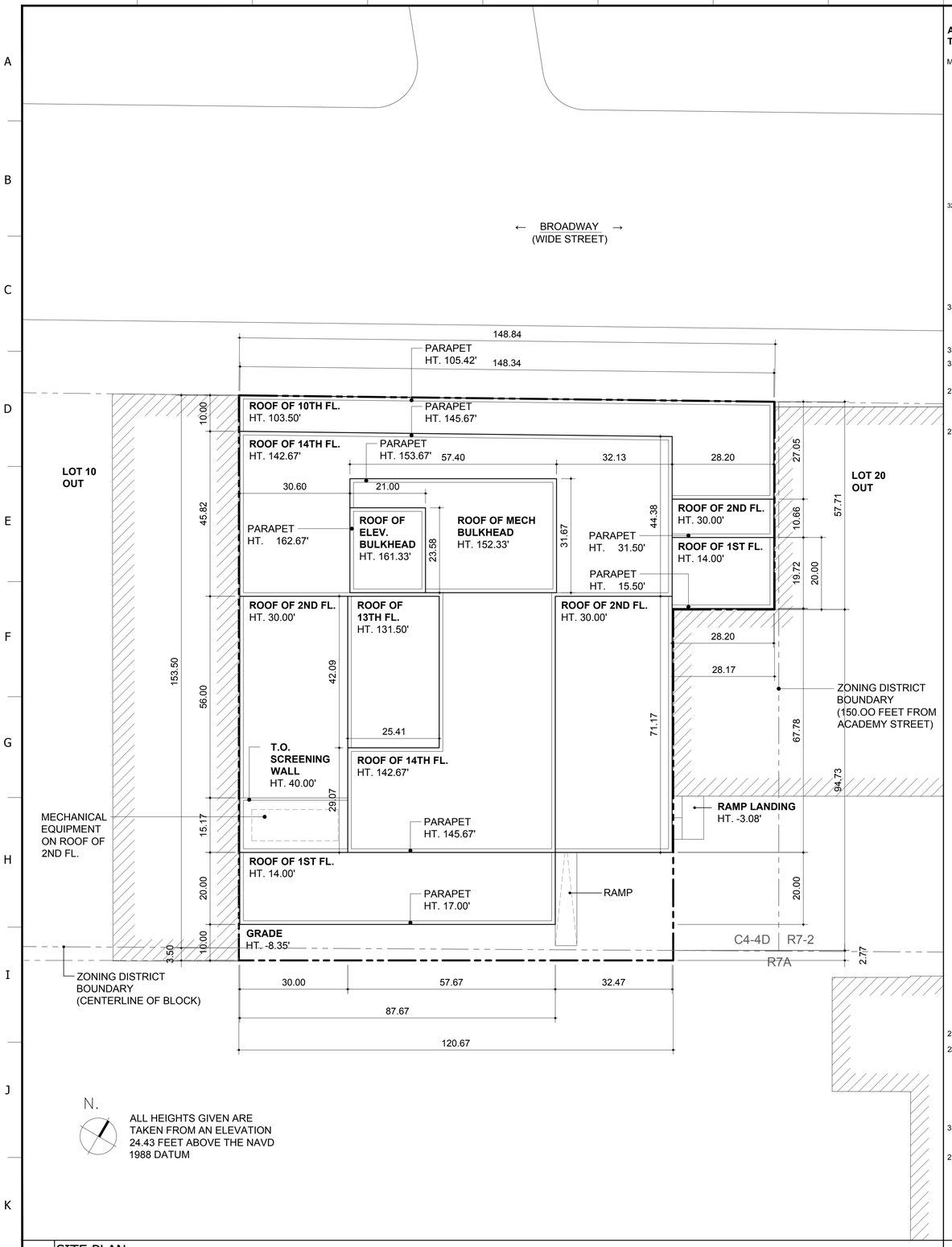

1 SITE PLAN
SCALE: 1/16" = 1'-0"

ADDRESS: 4790 BROADWAY, MANHATTAN, NY 10034
TAX BLOCK: 2233 TAX LOT: 13

MAPS 3a **1. ZONING DISTRICTS** C4-4D (R8A EQUIVALENT), R7A
APPENDIX F - MANDATORY INCLUSIONARY HOUSING DISTRICT
ARTICLE XIV CHAPTER 2 - SPECIAL INWOOD DISTRICT -
LIBRARY SUBDISTRICT 'C'

2. LOT AREA

C4-4D (R8A EQUIVALENT)	20,108 SF
R7A	378 SF
TOTAL	**20,486 SF**

32-10 **3. USES PERMITTED**
USE GROUPS 1-6, 8-10, 12

4. USES PROPOSED USE GROUP 2 - RESIDENTIAL
USE GROUP 3 - LIBRARY, SCHOOL
USE GROUP 4 - COMMUNITY CENTER

35-31 **5. FLOOR AREA** **COMPLIES**

A. FAR PERMITTED

35-23	C4-4D (R8A EQUIVALENT)	
33-123	COMMUNITY FACILITY	6.5
	COMMERCIAL	3.4
23-154	RESIDENTIAL	7.2
	MAXIMUM PERMITTED	**7.2**
	R7A	
23-154	COMMUNITY FACILITY	4.0
	RESIDENTIAL	4.6
	MAXIMUM PERMITTED	**4.6**

B. FLOOR AREA PERMITTED

C4-4D (R8A EQUIVALENT)	
COMMUNITY FACILITY (C4-4D ONLY)	
20,108 @ 6.5 F.A.R.	130,702 SF
COMMERCIAL	
20,108 @ 3.4 F.A.R.	68,367 SF
RESIDENTIAL	
20,108 @ 7.2 F.A.R.	144,777 SF
MAXIMUM PERMITTED	**144,777 SF**
R7A	
COMMUNITY FACILITY	
378 @ 4.0 F.A.R.	1,512 SF
RESIDENTIAL	
378 @ 4.6 F.A.R.	1,739 SF
MAXIMUM PERMITTED	1,739 SF

C. FLOOR AREA PROPOSED TOTAL

C4-4D (R8A EQUIVALENT)	
SHARED FLOOR AREA CALCULATIONS:	
SHARED FLOOR AREA	1,879 SF
TOTAL FLOOR AREA (NOT SHARED)	142,800 SF
RESIDENTIAL FLOOR AREA	
(EXCLUDING SHARED FLOOR AREA)	116,891 SF
COMMUNITY FACILITY FLOOR AREA	
(EXCLUDING SHARED FLOOR AREA)	25,909 SF
PROPORTION RESIDENTIAL FLOOR AREA	82%
SHARED FLOOR AREA ATTRIBUTED TO:	
RESIDENTIAL	1,541 SF
COMMUNITY FACILITY	338 SF
FLOOR AREA TOTALS	
COMMUNITY FACILITY	26,247 SF
RESIDENTIAL	118,432 SF
COMMERCIAL	0 SF
TOTAL	144,679 SF
R7A	
COMMUNITY FACILITY	0 SF
RESIDENTIAL	0 SF
TOTAL	0 SF

23-90 **6. INCLUSIONARY HOUSING** (REF Z-008) **COMPLIES**
23-154(d)(3)(i)
OPTION 1 (25% OF RESIDENTIAL FLOOR AREA SHALL BE AFFORDABLE)

TOTAL RESIDENTIAL FLOOR AREA	118,432 SF
TOTAL AREA OF AFFORDABLE UNITS	47,438 SF (40.07%)

35-40 **7. DENSITY** **COMPLIES**

23-22 A. NUMBER OF PERMITTED DWELLING UNITS

DENSITY UNIT FACTOR	680
TOTAL ALLOWABLE RESIDENTIAL FLOOR AREA:	144,777 SF

2 ZONING CALCULATION
SCALE: N.T.S.

PROPOSED NON-RESIDENTIAL FLOOR AREA:	26,247 SF
DWELLING UNITS PERMITTED	
144,777 - 26,247 = 118,530	
118,530 ÷ 680 =	174
DWELLING UNITS PROVIDED	174

8. YARDS (REF 1/Z-002) **COMPLIES**

9. STREET WALLS (REF Z-003) **COMPLIES**

35-61 **10. HEIGHT AND SETBACK** (REF Z-003) **COMPLIES**

11. MINIMUM DISTANCE + COURTS (REF 1/Z-002) **COMPLIES**

36-35 **12. PARKING** **COMPLIES**
25-251 NO PARKING REQUIRED FOR INCOME-RESTRICTED

13. LOADING **COMPLIES**
NONE REQUIRED FOR COMMUNITY FACILITY

36-711 **14. BICYCLE PARKING** (REF 1/A-100) **COMPLIES**

A. REQUIRED SPACES

RESIDENTIAL USE PROPOSED (50% OF THE # OF DU'S)	
174 DU X 0.5	87 SPACES
COMMUNITY FACILITY USE (1 PER 10,000 SF OF FA)	
COLLEGES, UNIVERSITIES OR SEMINARIES CLASSROOMS, LABORATORIES, STUDENT CENTERS OR OFFICES	
PROPOSED COMMUNITY FACILITY:	7,027 SF
REQUIRED SPACES 7,027 SF / 10,000:	1 SPACES
COMMUNITY FACILITY USE (1 PER 20,000 SF OF FA)	
LIBRARIES, MUSEUMS OR NON-COMMERCIAL ART GALLERIES	
PROPOSED COMMUNITY FACILITY:	19,204 SF
REQUIRED SPACES 19,204 SF / 20,000:	1 SPACES
TOTAL SPACES REQUIRED	89 SPACES
TOTAL REQUIRED AREA (89 X 7 SF)	623 SF

25-83 B. SPACES PROVIDED

36-73 TOTAL SF PROVIDED (REF. A-100.00)	857 SF ≥ 623 SF
BICYCLE SPACES PROVIDED	120 SPACE
SF / BICYCLE = 857 SF / 120	7 SF / BICYCLE

15. THE QUALITY HOUSING PROGRAM **COMPLIES**
(REF A-103 - A-106)

28-12 A. REFUSE ROOM (REF A-103 - A-106) **COMPLIES**
ACCESSIBLE REFUSE ROOM PROVIDED ON EVERY FLOOR WITH DWELLING UNITS

28-13 B. LAUNDRY FACILITIES (REF A-106) **COMPLIES**

WASHING MACHINES REQUIRED:	9
WASHING MACHINES PROVIDED:	10
DRYERS REQUIRED:	5
DRYERS PROVIDED:	10
GLAZING AREA REQUIRED:	36 SF
GLAZING AREA PROVIDED:	76 SF

28-14 (a) C. DAYLIGHT IN CORRIDOR (REF A-103 - A-106) **COMPLIES**
DIRECTLY VISIBLE FROM VERTICAL CIRCULATION CORE

REQUIRED MINIMUM CLEAR GLAZED AREA	20 SF
PROVIDED	22 SF

28-21 D. RECREATION SPACE (REF Z-007) **COMPLIES**
2.8% OF TOTAL RESIDENTIAL FLOOR AREA REQUIRED

TOTAL RESIDENTIAL FLOOR AREA:	118,330 SF
REQUIRED (2.8% SF OF FA)	
118,395 × 2.8% =	3,315 SF
PROVIDED (INTERIOR + EXTERIOR)	
2,467 + 975 =	3,442 SF

16. STREET TREE **COMPLIES**

33-03 REQUIRED (1 TREE PER 25 FT OF STREET FRONTAGE)	
26-41 148.83' ÷ 25 =	6 TREES
PROPOSED	
EXISTING ON SITE	0 TREES
TREES TO BE PLANTED	0 TREES
TREES TO BE RELOCATED	6 TREES
TOTAL PROPOSED ON SITE	0 TREES*

*SITE CONDITIONS PREVENT TREE PLANTING. IN LIEU OF PLANTING TREES ON SITE, THE DEVELOPER WILL PAY INTO NYC PARKS' TREE FUND

3 ZONING CALCULATION
SCALE: N.T.S.

Client:
RANGER PROPERTIES
4790 BROADWAY
NEW YORK, NY 10034

Architect:
FOGARTY FINGER
architecture | interiors
69 Walker St, New York, NY 10013
t 212 966 7450 f 212 966 7444

Structural:
Thornton Tomasetti
51 Madison Avenue
New York, NY 10010
Tel 917.661.7800

MEP / FP:
Concessi Engineering, PC
499 7th Avenue, 11th Floor South Tower
New York, NY 10018
Tel 212.629.6810

GEOTECH:
FNA Engineering Services, PC
670 Bergen Boulevard, Floor 2
Ridgefield, NJ 07657
Tel 201.241.2444

FACADE:
Simpson Gumpertz & Heger
550 7th Avenue, 10th Floor
New York, NY 10018
Tel 212.271.7000

CODE:
Metropolis
22 Courtland Street, 10th Floor
New York, NY 10007
Tel 212.233.6344

No.	Date	Issue
02	02.06.2019	DD ESTIMATING
01	11.20.2018	SCHEMATIC DESIGN

Project:
4790 BROADWAY
NEW YORK, NY 10034

Drawing Title:
ZONING
CALCULATIONS

Seal & Signature:

DATE (MM-DD-YY): 02-05-2019
PROJECT No.:
DRAWING BY: --
CHK BY: --
DWG No.: Z-001.00
CADD FILE No.:

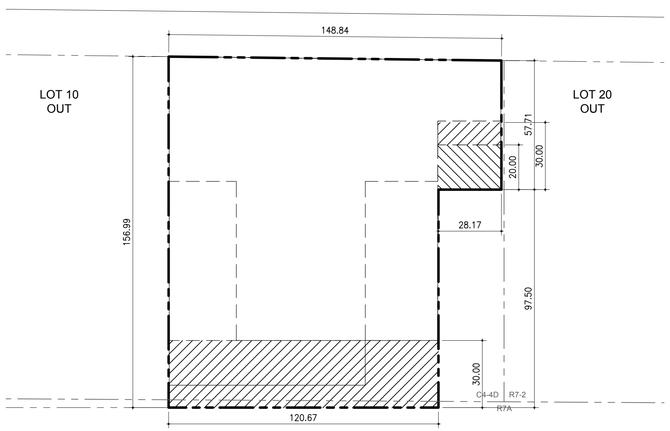

LEGEND	ZONING CALCULATIONS
30' RESIDENTIAL REAR YARD	**YARDS**
20' COMMUNITY / COMMERCIAL REAR YARD	**A. COMMERCIAL**
	33-26 REAR YARD BEYOND 100' OF CORNER 20'
	B. RESIDENTIAL
	23-47 REAR YARD BEYOND 100' OF CORNER 30'
	24-33(B)(3) PERMITTED OBSTRUCTION 1 STORY OF COMMUNITY FACILITY 23' MAX. ABOVE CURB

1 YARD DIAGRAM
SCALE: 1/32" = 1'-0"

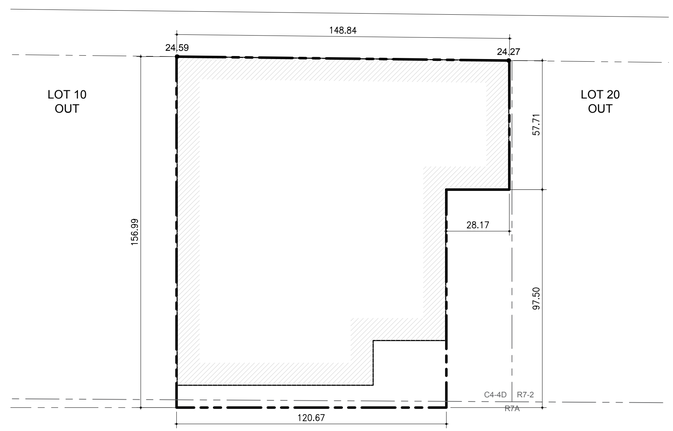

ADJUSTED BASE PLANE CALCULATION
ZR 12-10(c)(Base Plane)
INTERIOR $\frac{24.59' + 24.27'}{2}$ = 24.43'

2 BASE PLANE DIAGRAM
SCALE: 1/32" = 1'-0"

Floor	Use	Gross Floor Area (SF)	Deductions (SF)	Zoning Floor Area (SF)
C	COMMUNITY FACILITY	10,108	10,108	0
	RESIDENTIAL - BOH	5,255	5,255	0
	TOTAL	**15,363**	**15,363**	**0**
1	COMMUNITY FACILITY	14,229	615	13,614
	RESIDENTIAL	1,720	0	1,720
	SHARED FLOOR AREA	1,683	0	1,683
	TOTAL	**17,632**	**615**	**17,017**
2	COMMUNITY FACILITY	13,514	1,219	12,295
	RESIDENTIAL	497	0	497
	SHARED FLOOR AREA	196	0	196
	TOTAL	**14,207**	**1,219**	**12,988**
3	RESIDENTIAL	11,946	1,507	10,439
4	RESIDENTIAL	11,491	1,052	10,439
5	RESIDENTIAL	11,491	1,052	10,439
6	RESIDENTIAL	11,491	1,052	10,439
7	RESIDENTIAL	11,491	1,052	10,439
8	RESIDENTIAL	11,491	1,052	10,439
9	RESIDENTIAL	11,491	1,052	10,439
10	RESIDENTIAL	11,491	1,052	10,439
11	RESIDENTIAL	9,522	950	8,572
12	RESIDENTIAL	9,522	950	8,572
13	RESIDENTIAL	9,522	950	8,572
14	RESIDENTIAL	9,522	4,076	5,446
Bulkhead	RESIDENTIAL	1,837	1,837	0
SHARED FLOOR AREA	TOTAL	1,879	0	1,879
	PROPORTION RESIDENTIAL	1,541	0	1,541
	COMMUNITY FACILITY	225	0	338
TOTALS	**COMMUNITY FACILITY**	38,076	11,942	26,247
	RESIDENTIAL	141,284	22,889	118,432
	TOTAL	**179,360**	**34,831**	**144,679**

5 ZONING FLOOR AREA SCHEDULE
SCALE: N.T.S.

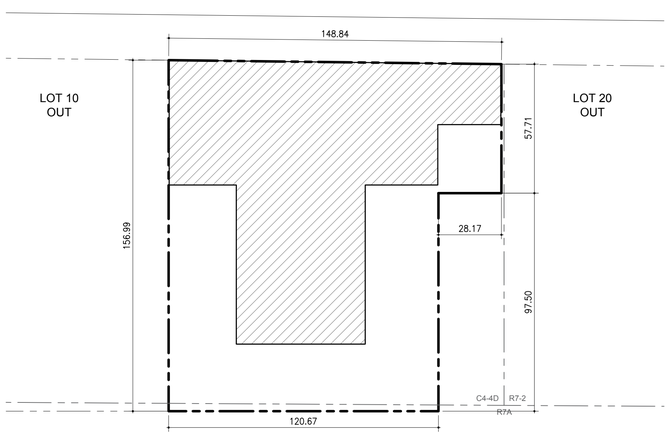

LEGEND	PROPOSED RESIDENTIAL COVERAGE
PROPOSED RESIDENTIAL COVERAGE	**23-153, 34-112**
	C4-4D (R8A EQUIVALENT)
	MAX. COVERAGE @ 70% 14,076 SF
	PROPOSED COVERAGE 11,490 SF **(57%)**
	R7A MAX. COVERAGE 246 SF
	PROPOSED COVERAGE 0 SF

3 LOT COVERAGE DIAGRAM
SCALE: 1/32" = 1'-0"

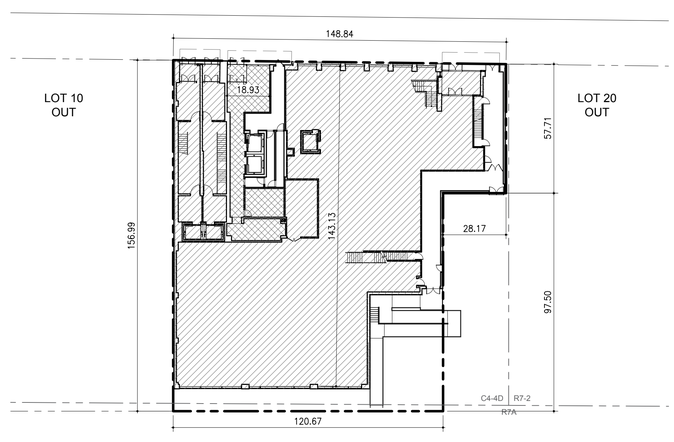

LEGEND	PROPOSED GROUND FLOOR PLAN
PROPOSED COMMUNITY FACILITY	**142-14, 37-32, 37-33**
PROPOSED RESIDENTIAL LOBBY	**TYPE 1 PRIMARY STREET FRONTAGE**
	MINIMUM DEPTH OF NON-RESIDENTIAL USE: 30 LF
	PROPOSED DEPTH: 143.13 LF
	PERMITTED WIDTH OF TYPE 1 LOBBY: 20 LF
	PROPOSED WIDTH: 18.93 LF

4 GROUND FLOOR PLAN
SCALE: 1/32" = 1'-0"

4790 BROADWAY

Unit Count and Unit Mix
2019-02-06

UNIT TYPE	STUDIO			1-BED			2-BED			3-BED			TOTAL BY FLOOR
	Non-IH	IH	Total	Non-IH	IH	Total	Non-IH	IH	Total	Non-IH	IH	Total	
1													**0**
2													**0**
3	2	2	**4**	3	4	**7**	3	1	**4**	0	1	**1**	**16**
4	2	2	**4**	3	4	**7**	1	3	**4**	0	1	**1**	**16**
5	2	2	**4**	3	4	**7**	1	3	**4**	0	1	**1**	**16**
6	2	2	**4**	4	3	**7**	2	2	**4**	0	1	**1**	**16**
7	2	2	**4**	4	3	**7**	2	2	**4**	1	0	**1**	**16**
8	2	2	**4**	4	3	**7**	2	2	**4**	1	0	**1**	**16**
9	2	2	**4**	4	3	**7**	2	2	**4**	1	0	**1**	**16**
10	2	2	**4**	4	3	**7**	2	2	**4**	1	0	**1**	**16**
11	1	2	**3**	3	3	**6**	2	2	**4**	0	0	**0**	**13**
12	1	2	**3**	3	3	**6**	2	2	**4**	0	0	**0**	**13**
13	1	2	**3**	3	3	**6**	2	2	**4**	0	0	**0**	**13**
14	2	1	**3**	0	2	**2**	2	0	**2**	0	0	**0**	**7**
TOTAL BY TYPE	**21**	**23**	**44**	**38**	**38**	**76**	**23**	**23**	**46**	**4**	**4**	**8**	**174**
	12.1%	13.2%	**25.3%**	21.8%	21.8%	**43.7%**	13.2%	13.2%	**26.4%**	2.3%	2.3%	**4.6%**	100.0%

A TOTAL OF 9 UFAS UNITS IS PROVIDED AT UNIT 404, 501, 714, 801, 907, 1005, 1201, 1314, 1401.
A TOTAL OF 4 HVI UNITS IS PROVIDED AT UNIT 301, 607, 705, 1114.
* A TOTAL OF 1 SUPER'S UNIT IS PROVIDED AT UNIT 314.

6 UNIT COUNT AND UNIT MIX SCHEDULE
SCALE: N.T.S.

Client:
RANGER PROPERTIES
4790 BROADWAY
NEW YORK, NY 10034

Architect:
FOGARTY FINGER architecture | interiors
69 Walker St, New York, NY 10013
t 212 966 7450 f 212 966 7444

Structural:
Thornton Tomasetti
51 Madison Avenue
New York, NY 10010
Tel 917.661.7800

MEP / FP:
Concessi Engineering, PC
499 7th Avenue, 11th Floor South Tower
New York, NY 10018
Tel 212.629.6810

GEOTECH:
FNA Engineering Services, PC
670 Bergen Boulevard, Floor 2
Ridgefield, NJ 07657
Tel 201.241.2444

FACADE:
Simpson Gumpertz & Heger
550 7th Avenue, 10th Floor
New York, NY 10018
Tel 212.271.7000

CODE:
Metropolis
22 Courtland Street, 10th Floor
New York, NY 10007
Tel 212.233.6344

No.	Date	Issue
02	02.06.2019	DD ESTIMATING
01	11.20.2018	SCHEMATIC DESIGN

Project:
4790 BROADWAY
NEW YORK, NY 10034

Drawing Title:
ZONING DIAGRAMS

Seal & Signature:

DATE (MM-DD-YY): 02-05-2019
PROJECT No.:
DRAWING BY: --
CHK BY: --
DWG. No.: Z-002.00
CADD FILE No.:

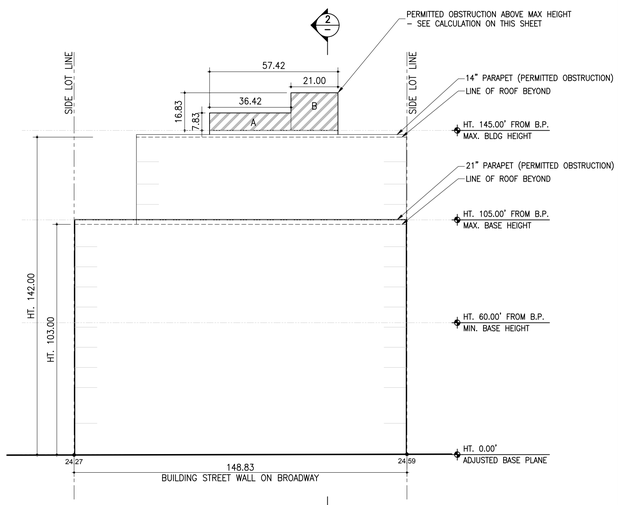

1 HEIGHT AND SETBACK DIAGRAM
SCALE: 1/32" = 1'-0"

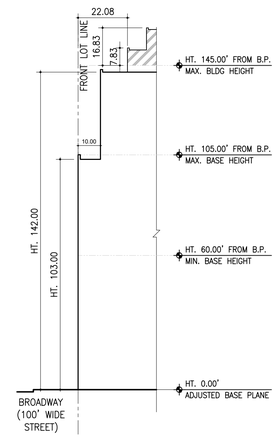

2 HEIGHT AND SETBACK DIAGRAM
SCALE: 1/32" = 1'-0"

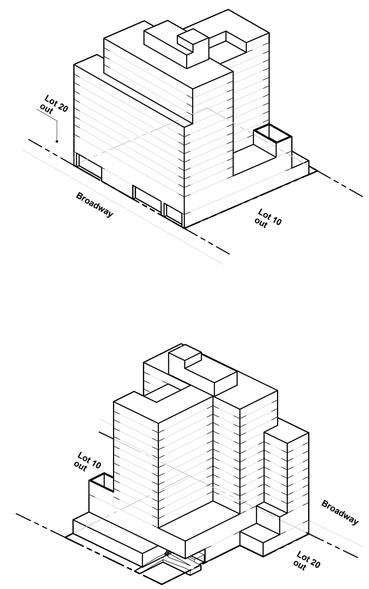

3 BUILDING AXONOMETRIC DIAGRAMS
SCALE: N.T.S.

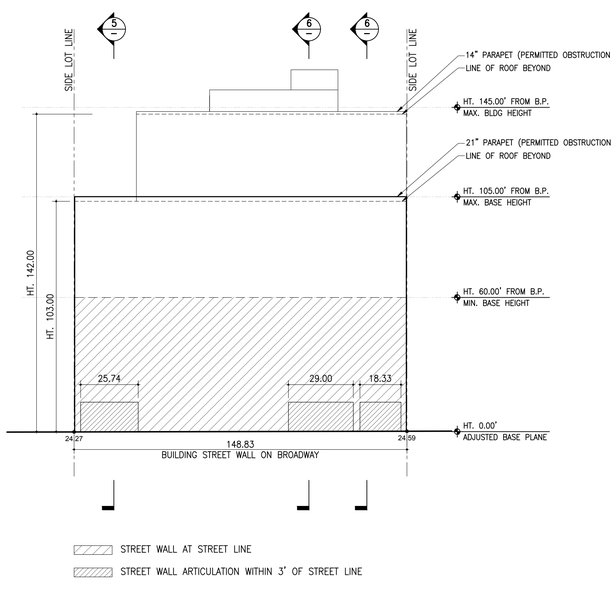

4 STREET WALL DIAGRAM
SCALE: 1/32" = 1'-0"

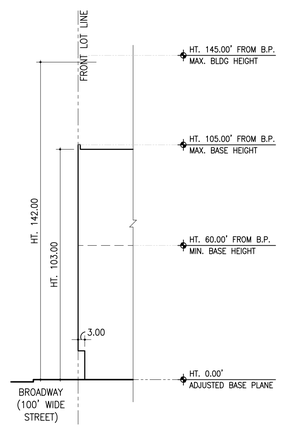

5 STREET WALL DIAGRAM
SCALE: 1/32" = 1'-0"

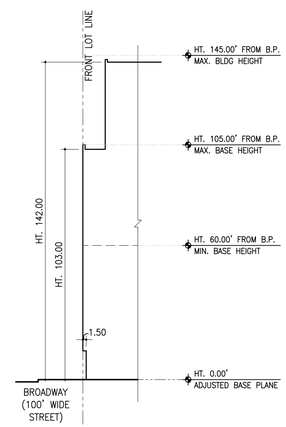

6 STREET WALL DIAGRAM
SCALE: 1/32" = 1'-0"

HEIGHT AND SETBACK

HEIGHT LIMITS
ZR 142-48
ZR 35-23
ZR 23-664 (a) **COMPLIES**

QGF (QUALIFYING GROUND FLOOR) FOR THE PURPOSES OF HEIGHT INCREASES REQUIRES 2ND STORY TO BE MIN. 13' ABOVE ADJOINING SIDEWALK.

HEIGHT LIMITS FOR INCLUSIONARY HOUSING BUILDINGS
ZR 23-664 **COMPLIES**
MAXIMUM BASE HEIGHT 105'
MAXIMUM BUILDING HEIGHT 14 STORIES / 145'

SETBACK REQUIREMENT

ZR 23-662 (c) **COMPLIES**
SETBACK MIN. 10' FROM WIDE STREET

PERMITTED OBSTRUCTIONS:

ZR 33-42 (f) **COMPLIES**

PERMITTED OBSTRUCTION:
148.83' X 8' = 1,190.64 SF

PROPOSED OBSTRUCTION CALCULATIONS:

TOTAL LENGTH OBSTRUCTION (A+B) = 57.42 LF

OBSTRUCTION (A):
36.42' / 57.42' = 63%
63% X 7.83' = 4.9'

OBSTRUCTION (B):
21.00' / 57.42' = 37%
37% X 16.83' = 6.2'

AVERAGE HEIGHT OF OBSTRUCTION:
6.2 + 4.9 = 11.1 LF

AREA OF PROPOSED OBSTRUCTION:
57.42' X 11.1 = 637.36 SF

1,190.64 SF > 637.36 SF

STREET WALL REQUIREMENT

ZR 142-49
ZR 35-651 **COMPLIES**
STREET WALL REQUIRED IN C4-4D FOR ENTIRE FRONTAGE.

ZR 35-651 (e) **COMPLIES**
STREET WALL ARTICULATION PERMITTED WITHIN 3' OF MAX. 50% OF AGGREGATED WIDTH OF STREET WALL.

AGGREGATED WIDTH FOR ARTICULATION
PERMITTED 148.83' × 50% = 74.42'
PROPOSED 25.74' + 29.00' + 18.33' = 73.07'

7 ZONING CALCULATIONS
SCALE: N.T.S.

Client:
RANGER PROPERTIES
4790 BROADWAY
NEW YORK, NY 10034

Architect:
FOGARTY FINGER architecture | interiors
69 Walker St, New York, NY 10013
t 212 966 7450 f 212 966 7444

Structural:
Thornton Tomasetti
51 Madison Avenue
New York, NY 10010
Tel 917.661.7800

MEP / FP:
Concessi Engineering, PC
499 7th Avenue, 11th Floor South Tower
New York, NY 10018
Tel 212.629.6810

GEOTECH:
FNA Engineering Services, PC
670 Bergen Boulevard, Floor 2
Ridgefield, NJ 07657
Tel 201.241.2444

FACADE:
Simpson Gumpertz & Heger
550 7th Avenue, 10th Floor
New York, NY 10018
Tel 212.271.7000

CODE:
Metropolis
22 Courtland Street, 10th Floor
New York, NY 10007
Tel 212.233.6344

No.	Date	Issue
02	02.06.2019	DD ESTIMATING
01	11.20.2018	SCHEMATIC DESIGN

Project:
4790 BROADWAY
NEW YORK, NY 10034

Drawing Title:
ZONING DIAGRAMS

Seal & Signature:

DATE (MM-DD-YY): 02-05-2019
PROJECT No.:
DRAWING BY: –
CHK BY: –
DWG. No.: Z-003.00
CADD FILE No.:

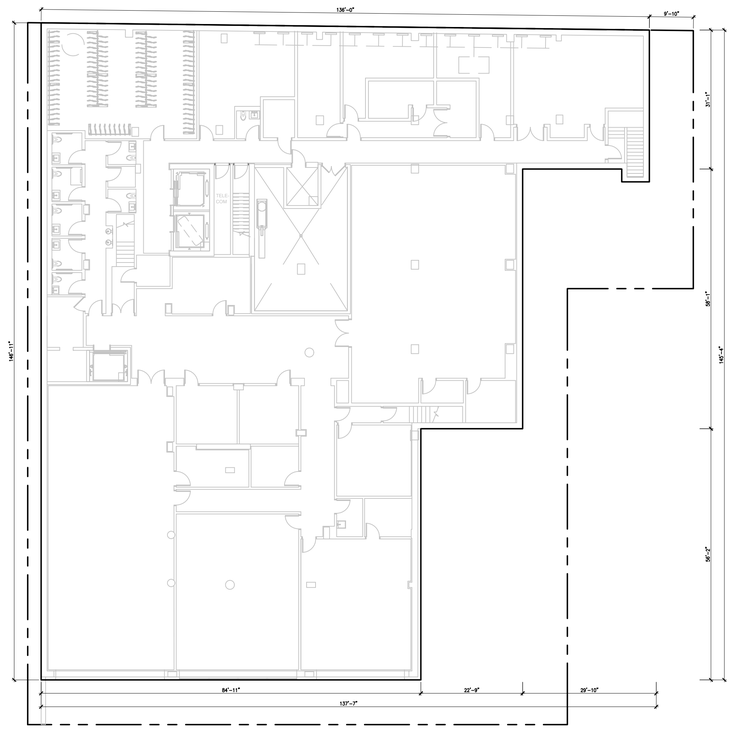

CELLAR FLOOR: AREA DEDUCTION			
NO.	TYPE	DIMENSIONS	AREA (SF)

CELLAR SPACE NOT INCLUDED IN FLOOR AREA. ZR 12-10		
TOTALS		
	GROSS FLOOR AREA	15,363
	NET FLOOR AREA	0

1 CELLAR FLOOR AREA DEDUCTIONS
SCALE: 1/16"=1'-0"

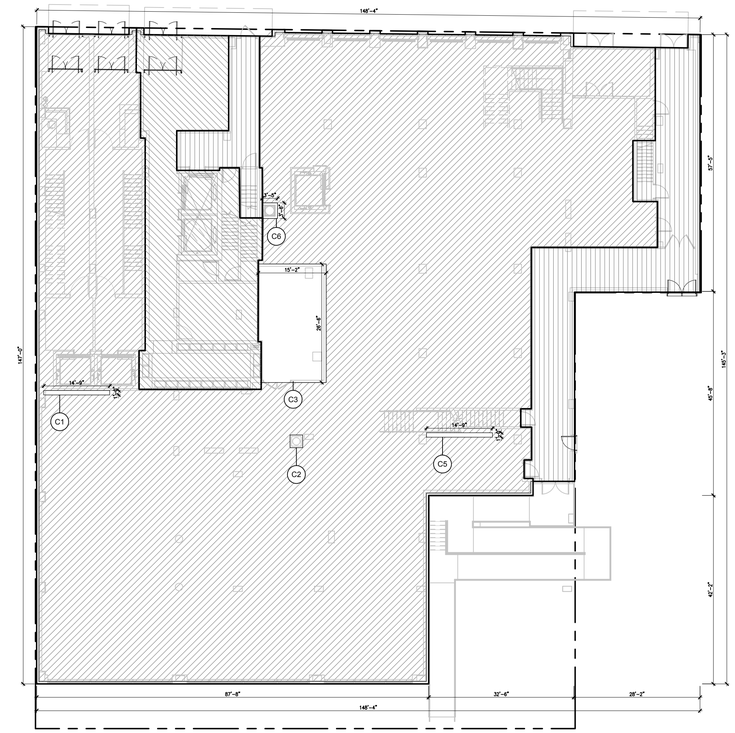

1ST FLOOR: AREA DEDUCTION			
NO.	TYPE	DIMENSIONS	AREA (SF)

COMMUNITY FACILITY			
MEP DEDUCTIONS			
C1	PL/MECH	SEE PLAN	15
C2	PL/MECH	SEE PLAN	8
C3	PL/MECH	SEE PLAN	397
C4	PL/MECH	SEE PLAN	
C5	PL/MECH	SEE PLAN	15
C6	PL/MECH	SEE PLAN	12
C7	-	-	
C8	-	-	
		MEP TOTAL	**447**
ZONE GREEN DEDUCTIONS ZR 23-61 (C)(1)			
	TOTAL WALL THICKNESS 14"		
	DEDUCTED WALL THICKNESS 14" - 8" = 6"		
		ZONE GREEN TOTAL	168
COMMUNITY FACILITY TOTALS			
		TOTAL AREA DEDUCTIONS	615
		GROSS FLOOR AREA	14,229
		NET FLOOR AREA	**13,614**

1ST FLOOR: AREA DEDUCTION			
NO.	TYPE	DIMENSIONS	AREA (SF)

RESIDENTIAL			
MEP DEDUCTIONS			
R1	-	-	
		MEP TOTAL	0
RESIDENTIAL TOTALS			
		TOTAL AREA DEDUCTIONS	0
		GROSS FLOOR AREA	1,720
		NET FLOOR AREA	**1,720**

SHARED FLOOR AREA	
TOTAL AREA DEDUCTIONS	0
GROSS FLOOR AREA	1,683
NET FLOOR AREA	**1,683**

COMMUNITY FACILITY FLOOR AREA

RESIDENTIAL FLOOR AREA

SHARED FLOOR AREA

COMBINED	
TOTALS	
TOTAL AREA DEDUCTIONS	615
GROSS FLOOR AREA	17,632
NET FLOOR AREA	17,017

2 1ST FLOOR AREA DEDUCTIONS
SCALE: 1/16"=1'-0"

Client:

RANGER PROPERTIES
4790 BROADWAY
NEW YORK, NY 10034

Architect:

FOGARTY FINGER
architecture | interiors
69 Walker St, New York, NY 10013
t 212 966 7450 f 212 966 7444

Structural:

Thornton Tomasetti
51 Madison Avenue
New York, NY 10010
Tel 917.661.7800

MEP / FP:

Concessi Engineering, PC
499 7th Avenue, 11th Floor South Tower
New York, NY 10018
Tel 212.629.6810

GEOTECH:

FNA Engineering Services, PC
670 Bergen Boulevard, Floor 2
Ridgefield, NJ 07657
Tel 201.241.2444

FACADE:

Simpson Gumpertz & Heger
550 7th Avenue, 10th Floor
New York, NY 10018
Tel 212.271.7000

CODE:

Metropolis
22 Courtland Street, 10th Floor
New York, NY 10007
Tel 212.233.6344

No.	Date	Issue
02	02.06.2019	DD ESTIMATING
01	11.20.2018	SCHEMATIC DESIGN

Project:

4790 BROADWAY
NEW YORK, NY 10034

Drawing Title:

CELLAR & 1ST FLOOR AREA DEDUCTIONS

Seal & Signature:

DATE (MM-DD-YY): 02-05-2019
PROJECT No.:
DRAWING BY: –
CHK BY: –
DWG. No.: Z-004.00
CADD FILE No.:

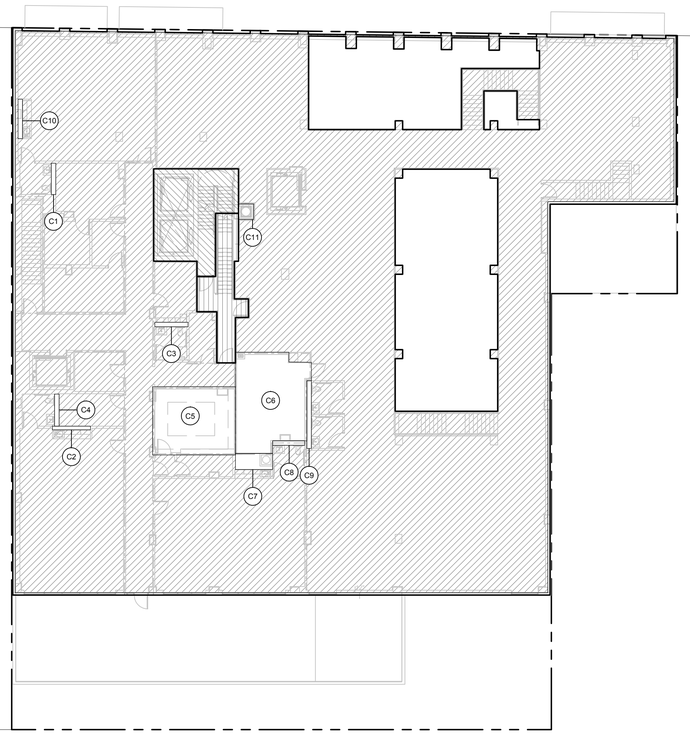

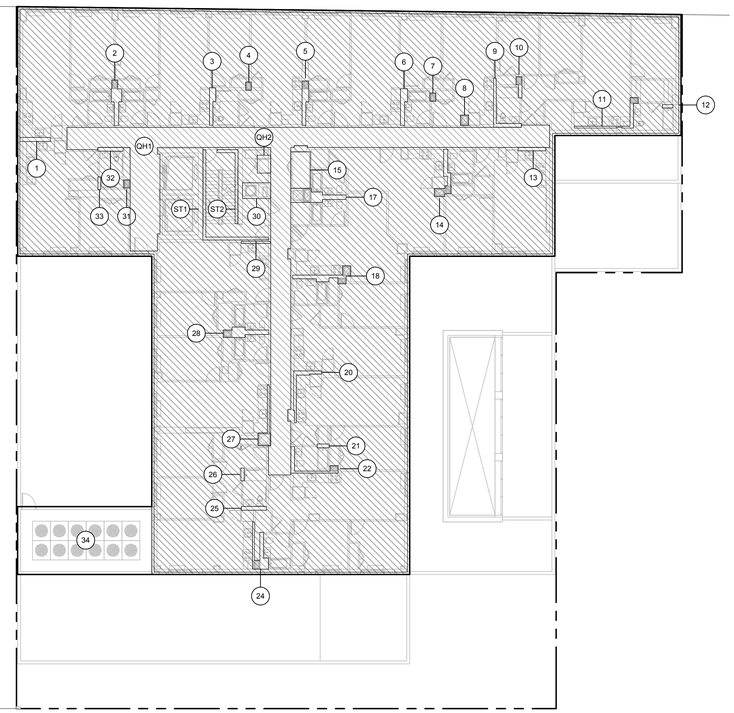

2ND FLOOR: AREA DEDUCTION

NO.	TYPE	DIMENSIONS	AREA (SF)
COMMUNITY FACILITY			
MEP DEDUCTIONS			
C1	PL/MECH	SEE PLAN	7
C2	PL/MECH	SEE PLAN	7
C3	PL/MECH	SEE PLAN	7
C4	PL/MECH	SEE PLAN	7
C5	MECH ROOM	SEE PLAN	282
C6	MECH ROOM	SEE PLAN	335
C7	PL/MECH	SEE PLAN	30
C8	PL/MECH	SEE PLAN	7
C9	PL/MECH	SEE PLAN	15
C10	PL/MECH	SEE PLAN	9
C11	PL/MECH	SEE PLAN	12
		MEP TOTAL	994
ZONE GREEN DEDUCTIONS ZR 23-61 (C)(1)			
	TOTAL WALL THICKNESS 14"		
	DEDUCTED WALL THICKNESS 14" - 8" = 6"		
		ZONE GREEN TOTAL	225
COMMUNITY FACILITY SUBTOTALS			
		TOTAL AREA DEDUCTIONS	1,219
		GROSS FLOOR AREA	13,514
		NET FLOOR AREA	**12,295**

2ND FLOOR: AREA DEDUCTION

NO.	TYPE	DIMENSIONS	AREA (SF)
RESIDENTIAL			
MEP DEDUCTIONS			
R1	-	-	
R2	-	-	
R3	-	-	
R4	-	-	
R5	-	-	
R6	-	-	
R7	-	-	
		MEP TOTAL	0
RESIDENTIAL SUBTOTALS			
		TOTAL AREA DEDUCTIONS	0
		GROSS FLOOR AREA	497
		NET FLOOR AREA	**497**

SHARED FLOOR AREA

TOTAL AREA DEDUCTIONS	0
GROSS FLOOR AREA	196
NET FLOOR AREA	**196**

COMMUNITY FACILITY FLOOR AREA

RESIDENTIAL FLOOR AREA

SHARED FLOOR AREA

COMBINED

TOTALS	
TOTAL AREA DEDUCTIONS	1,219
GROSS FLOOR AREA	14,207
NET FLOOR AREA	12,988

1 2ND FLOOR AREA DEDUCTIONS
SCALE: 1/16"=1'-0"

3RD FLOOR: AREA DEDUCTION

NO.	TYPE	DIMENSIONS	AREA (SF)
MEP DEDUCTIONS			
1	PL/MECH	SEE PLAN	6
2	PL/MECH	SEE PLAN	15
3	PL/MECH	SEE PLAN	8
4	PL/MECH	SEE PLAN	2
5	PL/MECH	SEE PLAN	11
6	PL/MECH	SEE PLAN	9
7	PL/MECH	SEE PLAN	2
8	PL/MECH	SEE PLAN	4
9	PL/MECH	SEE PLAN	11
10	PL/MECH	SEE PLAN	5
11	PL/MECH	SEE PLAN	12
12	PL/MECH	SEE PLAN	2
13	PL/MECH	SEE PLAN	5
14	PL/MECH	SEE PLAN	14
15	MECHANICAL	SEE PLAN	36
16	-	-	-
17	PL/MECH	SEE PLAN	26
18	PL/MECH	SEE PLAN	18
19	-	-	-
20	PL/MECH	SEE PLAN	11
21	PL/MECH	SEE PLAN	2
22	PL/MECH	SEE PLAN	11
23	-	-	-
24	PL/MECH	SEE PLAN	17
25	PL/MECH	SEE PLAN	5
26	PL/MECH	SEE PLAN	2
27	PL/MECH	SEE PLAN	13
28	PL/MECH	SEE PLAN	15
29	PL/MECH	SEE PLAN	3
30	MECH/TRASH	SEE PLAN	22
31	PL/MECH	SEE PLAN	6
32	PL/MECH	SEE PLAN	5
33	PL/MECH	SEE PLAN	2
34	PL/MECH	SEE PLAN	455
		MEP TOTAL	**755**

3RD FLOOR: AREA DEDUCTION

NO.	TYPE	DIMENSIONS	AREA (SF)
STAIR WELL DEDUCTIONS: ZR 12-10(11)			
ST1	STAIR WIDTH OVER 36"	SEE PLAN	23
ST2	STAIR WIDTH OVER 36"	SEE PLAN	14
		STAIR DEDUCTION TOTAL	**37**
QUALITY HOUSING DEDUCTIONS, SEE Z-001.00 FOR QH ANALYSIS			
QH1	50% OF CORRIDOR FOR DAYLIGHT (28-14)	972 SF × 50%	486
QH2	TRASH ROOM (28-12)	3'-0" × 4'-0"	12
		QUALITY HOUSING TOTAL	**498**
ZONE GREEN DEDUCTIONS ZR 23-61 (C)(1)			
	TOTAL WALL THICKNESS 14"		
	DEDUCTED WALL THICKNESS 14" - 8" = 6"		
		ZONE GREEN TOTAL	217
TOTALS			
		TOTAL AREA DEDUCTIONS	1,507
		GROSS FLOOR AREA	11,946
		NET FLOOR AREA	**10,439**

2 3RD FLOOR AREA DEDUCTIONS
SCALE: 1/16"=1'-0"

Client:

RANGER PROPERTIES
4790 BROADWAY
NEW YORK, NY 10034

Architect:

FOGARTY FINGER
architecture | interiors
69 Walker St, New York, NY 10013
t 212 966 7450 f 212 966 7444

Structural:

Thornton Tomasetti
51 Madison Avenue
New York, NY 10010
Tel 917.661.7800

MEP / FP:

Concessi Engineering, PC
499 7th Avenue, 11th Floor South Tower
New York, NY 10018
Tel 212.629.6810

GEOTECH:

FNA Engineering Services, PC
670 Bergen Boulevard, Floor 2
Ridgefield, NJ 07657
Tel 201.241.2444

FACADE:

Simpson Gumpertz & Heger
550 7th Avenue, 10th Floor
New York, NY 10018
Tel 212.271.7000

CODE:

Metropolis
22 Courtland Street, 10th Floor
New York, NY 10007
Tel 212.233.6344

No.	Date	Issue
02	02.06.2019	DD ESTIMATING
01	11.20.2018	SCHEMATIC DESIGN

Project:

4790 BROADWAY
NEW YORK, NY 10034

Drawing Title:

2ND & 3RD FLOOR AREA DEDUCTIONS

Seal & Signature:

DATE (MM-DD-YY): 02-05-2019
PROJECT No.:
DRAWING BY: –
CHK BY: –
DWG. No.: Z-005.00
CADD FILE No.:

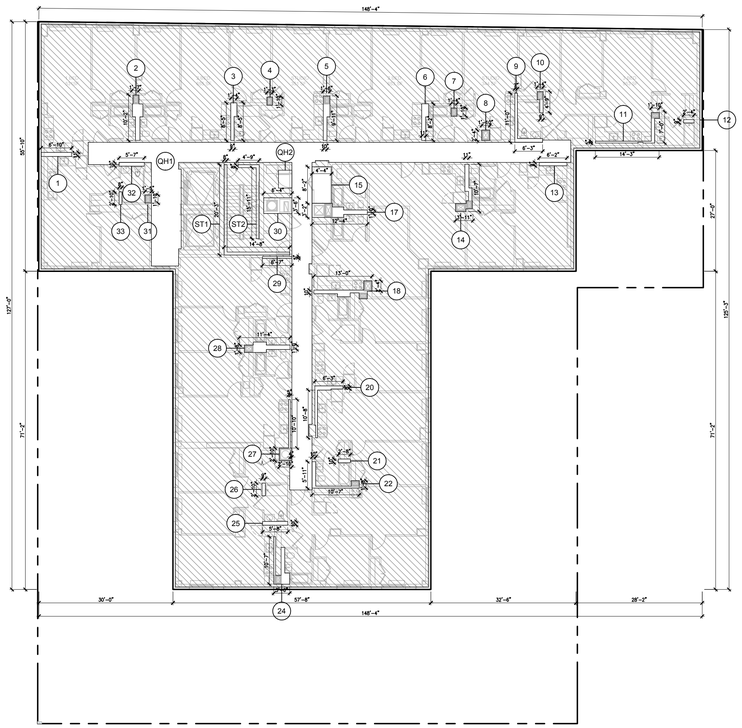

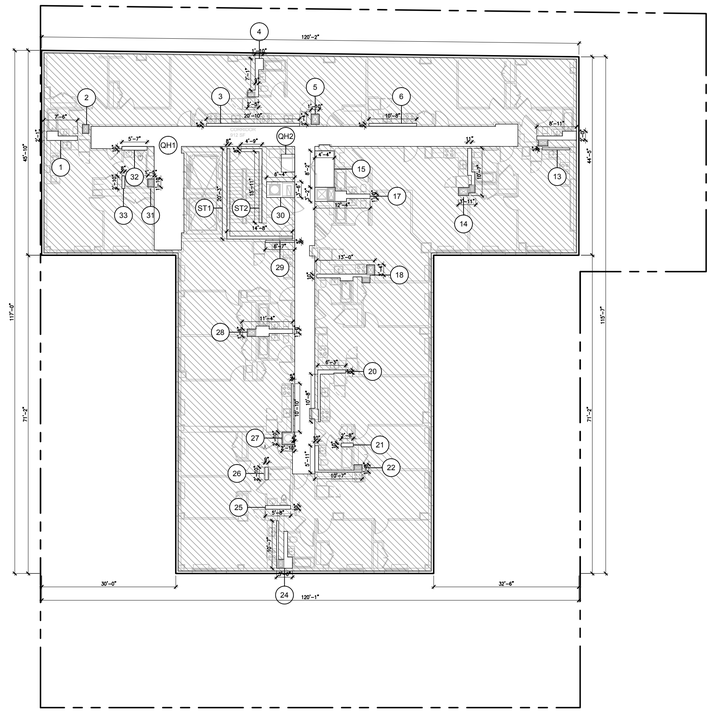

3RD FLOOR: AREA DEDUCTION			
NO.	TYPE	DIMENSIONS	AREA (SF)
MEP DEDUCTIONS			
1	PL/MECH	SEE PLAN	6
2	PL/MECH	SEE PLAN	15
3	PL/MECH	SEE PLAN	8
4	PL/MECH	SEE PLAN	2
5	PL/MECH	SEE PLAN	11
6	PL/MECH	SEE PLAN	9
7	PL/MECH	SEE PLAN	2
8	PL/MECH	SEE PLAN	4
9	PL/MECH	SEE PLAN	11
10	PL/MECH	SEE PLAN	5
11	PL/MECH	SEE PLAN	12
12	PL/MECH	SEE PLAN	2
13	PL/MECH	SEE PLAN	5
14	PL/MECH	SEE PLAN	14
15	MECHANICAL	SEE PLAN	36
16	-	-	-
17	PL/MECH	SEE PLAN	26
18	PL/MECH	SEE PLAN	18
19	-	-	-
20	PL/MECH	SEE PLAN	11
21	PL/MECH	SEE PLAN	2
22	PL/MECH	SEE PLAN	11
23	-	-	-
24	PL/MECH	SEE PLAN	17
25	PL/MECH	SEE PLAN	5
26	PL/MECH	SEE PLAN	2
27	PL/MECH	SEE PLAN	13
28	PL/MECH	SEE PLAN	15
29	PL/MECH	SEE PLAN	3
30	MECH/TRASH	SEE PLAN	22
31	PL/MECH	SEE PLAN	6
32	PL/MECH	SEE PLAN	5
33	PL/MECH	SEE PLAN	2
		MEP TOTAL	**300**
STAIR WELL DEDUCTIONS: ZR 12-10(11)			

3RD FLOOR: AREA DEDUCTION			
NO.	TYPE	DIMENSIONS	AREA (SF)
ST1	STAIR WIDTH OVER 36"	SEE PLAN	23
ST2	STAIR WIDTH OVER 36"	SEE PLAN	14
		STAIR DEDUCTION TOTAL	**37**
QUALITY HOUSING DEDUCTIONS, SEE Z-001.00 FOR QH ANALYSIS			
QH1	50% OF CORRIDOR FOR DAYLIGHT (28-14)	972 SF × 50%	486
QH2	TRASH ROOM (28-12)	3'-0" × 4'-0"	12
		QUALITY HOUSING TOTAL	**498**
ZONE GREEN DEDUCTIONS ZR 23-61 (C)(1)			
	TOTAL WALL THICKNESS 14"		
	DEDUCTED WALL THICKNESS 14" - 8" = 6"		
		ZONE GREEN TOTAL	217
TOTALS			
		TOTAL AREA DEDUCTIONS	1,052
		GROSS FLOOR AREA	11,491
		NET FLOOR AREA	**10,439**

1 4TH - 10TH FLOOR AREA DEDUCTIONS
SCALE: 1/16"=1'-0"

11TH - 13TH FLOOR: AREA DEDUCTION			
NO.	TYPE	DIMENSIONS	AREA (SF)
MEP DEDUCTIONS			
1	PL/MECH	SEE PLAN	10
2	PL/MECH	SEE PLAN	3
3	PL/MECH	SEE PLAN	14
4	PL/MECH	SEE PLAN	12
5	PL/MECH	SEE PLAN	4
6	PL/MECH	SEE PLAN	7
7	-	-	
8	-	-	
9	-	-	
10	-	-	
11	-	-	
12	PL/MECH	SEE PLAN	14
13	PL/MECH	SEE PLAN	3
14	PL/MECH	SEE PLAN	14
15	MECHANICAL	SEE PLAN	36
16	-	-	-
17	PL/MECH	SEE PLAN	26
18	PL/MECH	SEE PLAN	18
19	-	-	-
20	PL/MECH	SEE PLAN	11
21	PL/MECH	SEE PLAN	2
22	PL/MECH	SEE PLAN	11
23	-	-	-
24	PL/MECH	SEE PLAN	17
25	PL/MECH	SEE PLAN	5
26	PL/MECH	SEE PLAN	2
27	PL/MECH	SEE PLAN	13
28	PL/MECH	SEE PLAN	15
29	PL/MECH	SEE PLAN	3
30	MECH/TRASH	SEE PLAN	22
31	PL/MECH	SEE PLAN	6
32	PL/MECH	SEE PLAN	5
33	PL/MECH	SEE PLAN	2
		MEP TOTAL	**275**

11TH - 13TH FLOOR: AREA DEDUCTION			
NO.	TYPE	DIMENSIONS	AREA (SF)
STAIR WELL DEDUCTIONS: ZR 12-10(11)			
ST1	STAIR WIDTH OVER 36"	SEE PLAN	23
ST2	STAIR WIDTH OVER 36"	SEE PLAN	13
		STAIR DEDUCTION TOTAL	**36**
QUALITY HOUSING DEDUCTIONS, SEE Z-001.00 FOR QH ANALYSIS			
QH1	50% OF CORRIDOR FOR DAYLIGHT (28-14)	913 × 50%	457
QH2	TRASH ROOM (28-12)	3'-0" × 4'-0"	12
		QUALITY HOUSING TOTAL	**469**
ZONE GREEN DEDUCTIONS ZR 23-61 (C)(1)			
	TOTAL WALL THICKNESS 14"		
	DEDUCTED WALL THICKNESS 14" - 8" = 6"		
		ZONE GREEN TOTAL	170
TOTALS			
		TOTAL AREA DEDUCTIONS	950
		GROSS FLOOR AREA	9,522
		NET FLOOR AREA	**8,572**

2 11TH - 13TH FLOOR AREA DEDUCTIONS
SCALE: 1/16"=1'-0"

Client:

RANGER PROPERTIES
4790 BROADWAY
NEW YORK, NY 10034

Architect:

FOGARTY FINGER
architecture | interiors
69 Walker St, New York, NY 10013
t 212 966 7450 f 212 966 7444

Structural:

Thornton Tomasetti
51 Madison Avenue
New York, NY 10010
Tel 917.661.7800

MEP / FP:

Concessi Engineering, PC
499 7th Avenue, 11th Floor South Tower
New York, NY 10018
Tel 212.629.6810

GEOTECH:

FNA Engineering Services, PC
670 Bergen Boulevard, Floor 2
Ridgefield, NJ 07657
Tel 201.241.2444

FACADE:

Simpson Gumpertz & Heger
550 7th Avenue, 10th Floor
New York, NY 10018
Tel 212.271.7000

CODE:

Metropolis
22 Courtland Street, 10th Floor
New York, NY 10007
Tel 212.233.6344

No.	Date	Issue
02	02.06.2019	DD ESTIMATING
01	11.20.2018	SCHEMATIC DESIGN

Project:

4790 BROADWAY
NEW YORK, NY 10034

Drawing Title:

4TH THRU 13TH FLOOR AREA DEDUCTIONS

Seal & Signature:

DATE (MM-DD-YY): 02-05-2019
PROJECT No.:
DRAWING BY: –
CHK BY: –
DWG. No.: Z-006.00
CADD FILE No.:

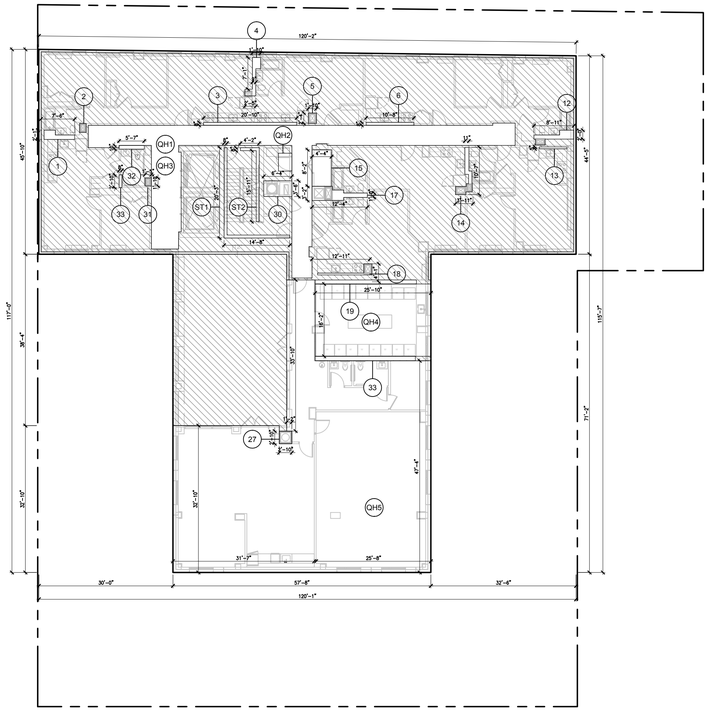

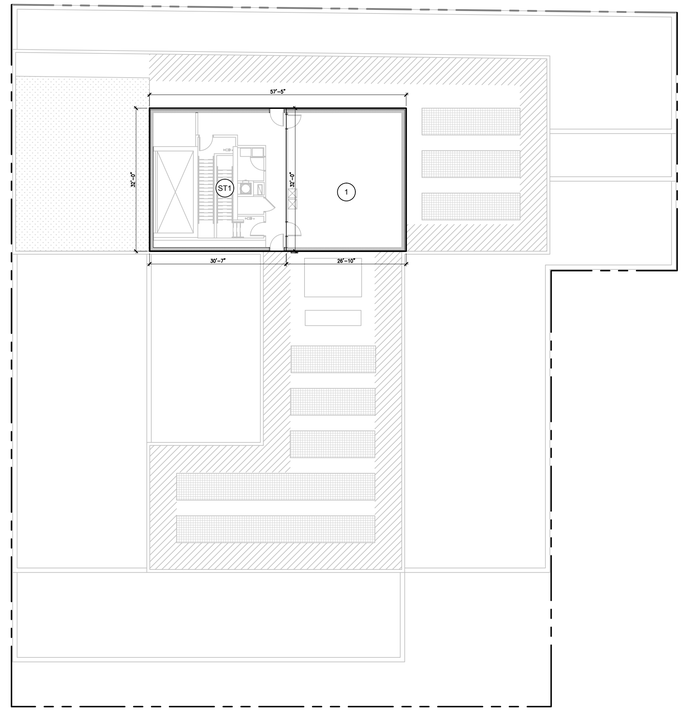

14TH FLOOR: AREA DEDUCTION			
NO.	TYPE	DIMENSIONS	AREA (SF)
MEP DEDUCTIONS			
1	PL/MECH	SEE PLAN	10
2	PL/MECH	SEE PLAN	3
3	PL/MECH	SEE PLAN	14
4	PL/MECH	SEE PLAN	12
5	PL/MECH	SEE PLAN	4
6	PL/MECH	SEE PLAN	7
7	-	-	
8	-	-	
9	-	-	
10	-	-	
11	-	-	
12	PL/MECH	SEE PLAN	14
13	PL/MECH	SEE PLAN	3
14	PL/MECH	SEE PLAN	14
15	MECHANICAL	SEE PLAN	36
16	-	-	19
17	PL/MECH	SEE PLAN	26
18	PL/MECH	SEE PLAN	9
19	PL/MECH	SEE PLAN	21
20	-	-	
21	-	-	
22	-	-	
23	-	-	
24	-	-	
25	-	-	
26	-	-	
27	PL/MECH	SEE PLAN	13
28	-	-	
29	-	-	
30	MECH/TRASH	SEE PLAN	22
31	PL/MECH	SEE PLAN	3
32	PL/MECH	SEE PLAN	5
33	PL/MECH	SEE PLAN	21
34	PL/MECH	SEE PLAN	25
		MEP TOTAL	**281**

14TH FLOOR: AREA DEDUCTION			
NO.	TYPE	DIMENSIONS	AREA (SF)
STAIR WELL DEDUCTIONS: ZR 12-10(11)			
ST1	STAIR WIDTH OVER 36"	SEE PLAN	23
ST2	STAIR WIDTH OVER 36"	SEE PLAN	14
		STAIR DEDUCTION TOTAL	**37**
QUALITY HOUSING DEDUCTIONS, SEE Z-001.00 FOR QH ANALYSIS			
QH1	50% OF CORRIDOR FOR DAYLIGHT (28-14)	718 SF × 50%	359
QH2	TRASH ROOM (28-12)	3'-0" × 4'-0"	12
QH3	50% OF CORRIDOR FOR DENSITY (28-31)	718 SF × 50%	358
QH4	LAUNDRY ROOM (28-13)	25'-4" × 17'-1"	418
QH5	INDOOR RECREATION SPACE	25'-7" × 35'-10"	2,467
		QUALITY HOUSING TOTAL	**3,614**
ZONE GREEN DEDUCTIONS ZR 23-61 (C)(1)			
	TOTAL WALL THICKNESS 14"		
	DEDUCTED WALL THICKNESS 14" - 8" = 6"		
		ZONE GREEN TOTAL	144
TOTALS			
		TOTAL AREA DEDUCTIONS	4,076
		GROSS FLOOR AREA	9,522
		NET FLOOR AREA	**5,446**

ELEV. BULKHEAD FLOOR: AREA DEDUCTION			
NO.	TYPE	DIMENSIONS	AREA (SF)
MEP DEDUCTIONS			
1	MECHANICAL ROOM	SEE PLAN	858
		MEP TOTAL	**858**
STAIR WELL DEDUCTIONS: ZR 12-10(2)			
ST1	STAIR / ELEV. BULKHEAD	SEE PLAN	979
		STAIR DEDUCTION TOTAL	**979**
TOTALS			
		TOTAL AREA DEDUCTIONS	1,837
		GROSS FLOOR AREA	1,837
		NET FLOOR AREA	**0**

1 14TH FLOOR AREA DEDUCTIONS
SCALE: 1/16"=1'-0"

2 ELEV. BULKHEAD FLOOR AREA DEDUCTIONS
SCALE: 1/16"=1'-0"

Client:
RANGER PROPERTIES
4790 BROADWAY
NEW YORK, NY 10034

Architect:
FOGARTY FINGER
architecture | interiors
69 Walker St, New York, NY 10013
t 212 966 7450 f 212 966 7444

Structural:
Thornton Tomasetti
51 Madison Avenue
New York, NY 10010
Tel 917.661.7800

MEP / FP:
Concessi Engineering, PC
499 7th Avenue, 11th Floor South Tower
New York, NY 10018
Tel 212.629.6810

GEOTECH:
FNA Engineering Services, PC
670 Bergen Boulevard, Floor 2
Ridgefield, NJ 07657
Tel 201.241.2444

FACADE:
Simpson Gumpertz & Heger
550 7th Avenue, 10th Floor
New York, NY 10018
Tel 212.271.7000

CODE:
Metropolis
22 Courtland Street, 10th Floor
New York, NY 10007
Tel 212.233.6344

No.	Date	Issue
02	02.06.2019	DD ESTIMATING
01	11.20.2018	SCHEMATIC DESIGN

Project:
4790 BROADWAY
NEW YORK, NY 10034

Drawing Title:
14TH & ELEV. BULKHEAD FLOOR AREA DEDUCTIONS

Seal & Signature:

DATE (MM-DD-YY): 02-05-2019
PROJECT No.:
DRAWING BY: –
CHK BY: –
DWG. No.: Z-007.00
CADD FILE No.:

PROJECT NAME: The Eliza
ADDRESS: 4790 Broadway
DATE: 1.31.2019

Chart A - Vertical Unit Distribution

Instructions: Please list the Inclusionary Housing Units by floor and designation. Please dedicate one column for each line of apartments.

Floor #	Inclusionary Housing Apartment Numbers															Total # of IH Units/Floor
27																
26																
25																
24																
23																
22																
21																
20																
19																
18																
17																
16																
15																
14	1401				1408	1410										3
13	1301	1304			1308	1310		1313	1314	1316						7
12	1201	1204			1208	1210		1213	1214	1216						7
11	1101	1104			1108	1110		1113	1114	1116						7
10	1001	1004			1008	1010		1013	1014	1016						7
9	901	904			908	910		913	914	916						7
8	801	804			808	810		813	814	816						7
7	701	704			708	710		713	714	716						7
6	601	604		607	608	610		613	614	616						8
5	501	504	505	507	508	510	511	513	514	516						10
4	401	404	405	407	408	410	411	413	414	416						10
3	301	304		307	308	310	311	313		316						8
2																
1																
																88 **Total DU**

Form 07-16-2012

1 HPD STACKING CHART A - VERTICAL UNIT DISTRIBUTION

SCALE: N.T.S.

PROJECT NAME: The Eliza
ADDRESS: 4790 Broadway
DATE: 1.31.2019

Chart B - Horizontal Unit Distribution

Building 1 - please provide a separate worksheet for each additional building.

Construction Floor #	Marketing Floor #	Total # of Units Per Floor	IH Units Per Floor	Staff Units Per Floor	Non-IH Units Per Floor	IH %-age
1	1	0	0		0	#DIV/0!
2	2	0	0		0	#DIV/0!
3	3	16	8	1	7	50.00%
4	4	16	10		6	62.50%
5	5	16	10		6	62.50%
6	6	16	8		8	50.00%
7	7	16	7		9	43.75%
8	8	16	7		9	43.75%
9	9	16	7		9	43.75%
10	10	16	7		9	43.75%
11	11	13	7		6	53.85%
12	12	13	7		6	53.85%
13	13	13	7		6	53.85%
14	14	7	3		4	42.86%
		0				#DIV/0!
		0				#DIV/0!
		0				#DIV/0!
		0				#DIV/0!
		0				#DIV/0!
		0				#DIV/0!
		0				#DIV/0!
		0				#DIV/0!
		0				#DIV/0!
		0				#DIV/0!
		0				#DIV/0!
		0				#DIV/0!
		0				#DIV/0!
		174	88	1	85	

Form 07-16-2012

2 HPD STACKING CHART B - HORIZONTAL UNIT DISTRIBUTION

SCALE: N.T.S.

PROJECT NAME: The Eliza
ADDRESS: 4790 Broadway
DATE: 1.31.2019

Chart C - Unit Bedroom Mix

Building 1 - please provide a separate worksheet for each additional building.

Unit Type

IH Unit Types	No. of Units	% Breakdown	Non-IH Unit Types *	No. of Units	% Breakdown	Super/Staff Units	TOTAL No. of Units
Studio	23	26.14%	Studio	21	24.71%		44
1-bd	38	43.18%	1-bd	38	44.71%		76
2-bd	23	26.14%	2-bd	22	25.88%	1	46
3-bd	4	4.55%	3-bd	4	4.71%		8
Total	**88**	**100.00%**	Total	**85**	**100.00%**	**1**	**174**

*Excludes Super/Staff Units

Form 07-16-2012

3 HPD STACKING CHART C - UNIT BEDROOM MIX

SCALE: N.T.S.

PROJECT ADDRESS: 4790 Broadway, New York, NY, 10034
BOROUGH BLOCK AND LOT: Block 2233, Lot 13&20
DATE: 1.31.2019

PLEASE FOLLOW STEPS 1-4. YELLOW BOXES REQUIRE INPUT.

STEP 1: PLEASE SELECT MIH OPTION

MIH OPTIONS	
OPTION 1: **25% of ResFA @ 60% AMI** weighted avg At least 10% of SF at 40% AMI No more than 3 income bands No income band > 130% AMI	**OPTION 2:** **30% of ResFA @ 80% AMI** weighted avg No more than 3 income bands No income band > 130% AMI
Option 3: **20% of ResFA @ 40% AMI** weighted avg No income band > 130% AMI Public funds per HPD exception only	**OPTION 4:** **30% of ResFA @ 115% AMI** weighted avg At least 5% of SF at 70% AMI At least 5% of SF at 90% AMI No more than 4 income bands No income band > 135% AMI

PLEASE SELECT MIH OPTION
(select from pulldown menu)

OPTION SELECTED:

OPTION 1

STEP 2: PLEASE ENTER MIH UNITS ONLY

Construction Floor #	Marketing Floor #	Apt #	# BRs	MIH Unit Size (SF)	AMI
3	3	301	1	526	60
3	3	304	0	350	60
3	3	307	3	946	60
3	3	308	1	498	40
3	3	310	0	413	40
3	3	311	1	502	60
3	3	313	2	660	40
3	3	316	1	510	60
4	4	401	1	526	60
4	4	404	0	350	60
4	4	405	2	652	60
4	4	407	3	946	60
4	4	408	1	498	60
4	4	410	0	413	40
4	4	411	1	502	60
4	4	413	2	660	60
4	4	414	2	687	60
4	4	416	1	510	60
5	5	501	1	526	60
5	5	504	0	350	60
5	5	505	2	652	60
5	5	507	3	946	60
5	5	508	1	498	60
5	5	510	0	413	60
5	5	511	1	502	60
5	5	513	2	660	40
5	5	514	2	687	60
5	5	516	1	510	60
6	6	601	1	526	40
6	6	604	0	350	60
6	6	607	3	946	60
6	6	608	1	498	60
6	6	610	0	413	60
6	6	613	2	660	60
6	6	614	2	687	60
6	6	616	1	510	60
7	7	701	1	526	60
7	7	704	0	350	60
7	7	708	1	498	40
7	7	710	0	413	60
7	7	713	2	660	60
7	7	714	2	687	60
7	7	716	1	510	60
8	8	801	1	526	60
8	8	804	0	350	40
8	8	808	1	498	60
8	8	810	0	413	60
8	8	813	2	660	60
8	8	814	2	687	40
8	8	816	1	510	60
9	9	901	1	526	40
9	9	904	0	350	40
9	9	908	1	498	60
9	9	910	0	413	60
9	9	913	2	660	60
9	9	914	2	687	60
9	9	916	1	520	60
10	10	1001	1	526	60
10	10	1004	0	350	60
10	10	1008	1	498	60
10	10	1010	0	413	60
10	10	1013	2	660	60
10	10	1014	2	687	60
10	10	1016	1	510	40
11	11	1101	1	526	60
11	11	1104	0	350	40
11	11	1108	1	498	60
11	11	1110	0	413	60
11	11	1113	2	660	60
11	11	1114	2	687	60
11	11	1116	1	510	60
12	12	1201	1	526	60
12	12	1204	0	350	60
12	12	1208	1	498	60
12	12	1210	0	413	40
12	12	1213	2	660	40
12	12	1214	2	687	60
12	12	1216	1	510	40
13	13	1301	1	526	40
13	13	1304	0	350	60
13	13	1308	1	498	60
13	13	1310	0	413	60
13	13	1313	2	660	60
13	13	1314	2	687	60
13	13	1316	1	510	60
14	14	1401	1	526	60
14	14	1408	1	498	40
14	14	1410	0	413	60

AFFORDABLE HOUSING SF:	47,438.00

MIH UNIT SUMMARY:

Unit Type	IH Units
0 BEDROOM	23
1 BEDROOM	38
2 BEDROOM	23
3 BEDROOM	4
4 BEDROOM	0
Total	**88**

STEP 3: PLEASE FILL OUT BASED ON ARCHITECT'S AFFIDAVIT

Per ARCHITECT's AFFIDAVIT Dated:	1.31.2019
SECTION 4 - TTL RESIDENTIAL SF:	118,429
SECTION 5 - MIH UNIT SF:	47,438.00
SECTION 6 - NON-MIH UNIT SF:	70,991
SECTION 7 - COMMON FLOOR AREA w/ FEE:	0
SECTION 8 - TTL AFFORD.FLOOR AREA:	**47,438.00**
IH SF % of TOTAL SF:	40.05%
WEIGHTED AVERAGE AMI:	56.2%
MIH FEE OWED:	$96,800.00
OPTION 1 IN COMPLIANCE?*	YES

WHY?:
-
-
-
-
-

STEP 4: PLEASE FILL OUT TABLE BELOW

Per ARCHITECT's ZONING Dated:	1.31.2019
GROSS BUILDING SF:	180789.00
GROSS COMMERCIAL SF:	0.00
GROSS COMMUNITY SF:	37980.00
PARKING SF:	0.00
OTHER SF:	0.00

4 HPD STACKING CHART D - UNIT SIZE

SCALE: N.T.S.

Client:
RANGER PROPERTIES
4790 BROADWAY
NEW YORK, NY 10034

Architect:
FOGARTY FINGER architecture | interiors
69 Walker St, New York, NY 10013
t 212 966 7450 f 212 966 7444

Structural:
Thornton Tomasetti
51 Madison Avenue
New York, NY 10010
Tel 917.661.7800

MEP / FP:
Concessi Engineering, PC
499 7th Avenue, 11th Floor South Tower
New York, NY 10018
Tel 212.629.6810

GEOTECH:
FNA Engineering Services, PC
670 Bergen Boulevard, Floor 2
Ridgefield, NJ 07657
Tel 201.241.2444

FACADE:
Simpson Gumpertz & Heger
550 7th Avenue, 10th Floor
New York, NY 10018
Tel 212.271.7000

CODE:
Metropolis
22 Courtland Street, 10th Floor
New York, NY 10007
Tel 212.233.6344

No.	Date	Issue
02	02.06.2019	DD ESTIMATING
01	11.20.2018	SCHEMATIC DESIGN

Project:
4790 BROADWAY
NEW YORK, NY 10034

Drawing Title:
INCLUSIONARY HOUSING CALCULATIONS

Seal & Signature:

DATE (MM-DD-YY): 02-05-2019
PROJECT No.:
DRAWING BY: --
CHK BY: --
DWG. No.: Z-008.00
CADD FILE No.:

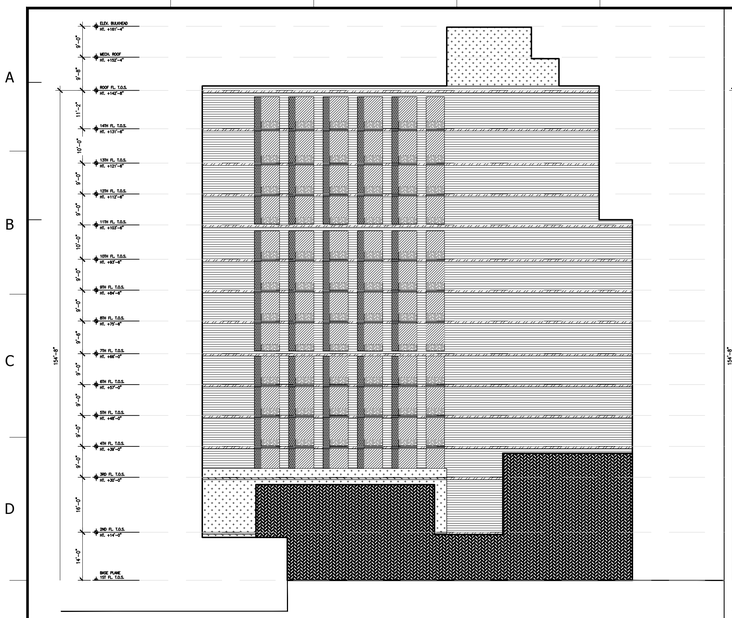

WALL ASSEMBLY TYPE A BRICK ASSEMBLY 8,569 SF	WALL ASSEMBLY TYPE B BRICK SLAB EDGE 746 SF	WALL ASSEMBLY TYPE C BRICK INSET PANEL 987 SF	WALL ASSEMBLY TYPE D BRICK INSET PANEL SLAB EDGE 60 SF
LOT LINE WALL 2,995 SF	ALUCO BOND SLAB COVER 240 SF	LOUVER 722 SF	
VISION GLASS 2,390 SF	EIFS ASSEMBLY 1,053 SF	EIFS ASSEMBLY SLAB EDGE 60 SF	

EAST ELEVATION 5
SCALE: NTS

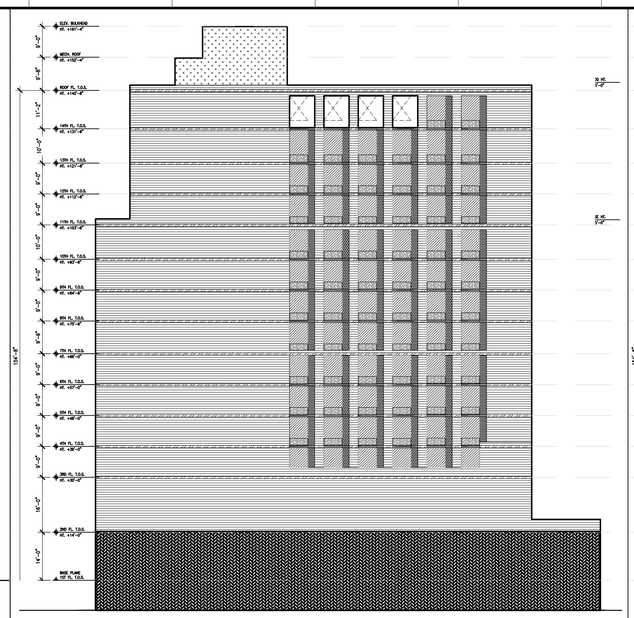

WALL ASSEMBLY TYPE A BRICK ASSEMBLY 10,712 SF	WALL ASSEMBLY TYPE B BRICK SLAB EDGE 811 SF	WALL ASSEMBLY TYPE C BRICK INSET PANEL 1,097 SF	WALL ASSEMBLY TYPE D BRICK INSET PANEL SLAB EDGE 71 SF
EIFS ASSEMBLY 484 SF	EIFS ASSEMBLY SLAB EDGE 455 SF	LOT LINE WALL 3,381 SF	ALUCO BOND SLAB COVER 243 SF
LOUVER 673 SF	VISION GLASS 2,241 SF		

WEST ELEVATION 4
SCALE: NTS

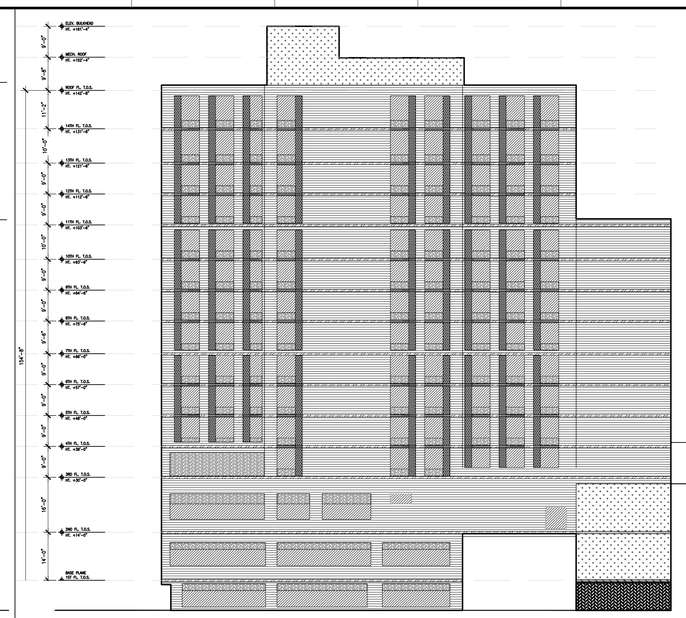

WALL ASSEMBLY TYPE A BRICK ASSEMBLY 10,714 SF	WALL ASSEMBLY TYPE B BRICK SLAB EDGE 917 SF	WALL ASSEMBLY TYPE C BRICK INSET PANEL 1,752 SF	WALL ASSEMBLY TYPE D BRICK INSET PANEL SLAB EDGE 104 SF
ALUCO BOND SLAB COVER 335 SF	LOUVER 1,697 SF	VISION GLASS 4,355 SF	
EIFS ASSEMBLY 1,409 SF	EIFS ASSEMBLY SLAB EDGE 37 SF	LOT LINE WALL 221 SF	

SOUTH ELEVATION 3
SCALE: NTS

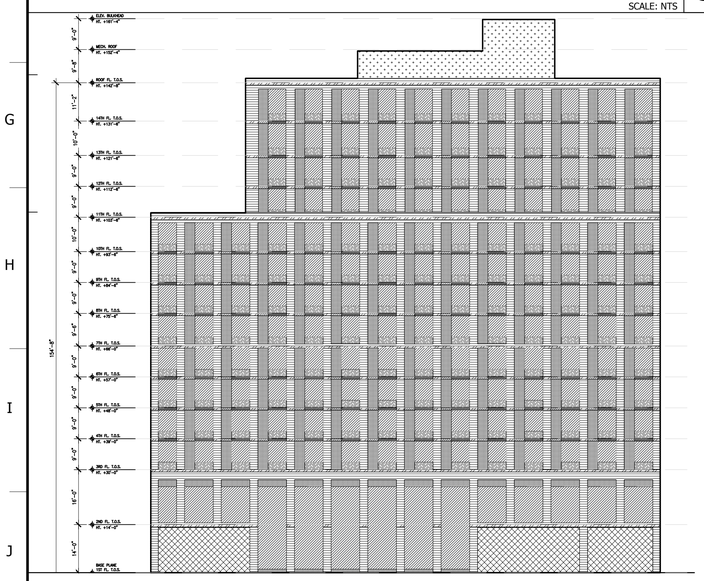

WALL ASSEMBLY TYPE A BRICK ASSEMBLY 5,271 SF	WALL ASSEMBLY TYPE B BRICK SLAB EDGE 628 SF	WALL ASSEMBLY TYPE C PRECAST PANEL 3,938 SF	WALL ASSEMBLY TYPE D PRECAST PANEL SLAB EDGE 218 SF
ALUCO BOND SLAB COVER 515 SF	LOUVER 1,648 SF	VISION GLASS 7,034 SF	
STOREFRONT GLASS ENTRY 992 SF	EIFS ASSEMBLY 649 SF		

NORTH ELEVATION 2
SCALE: NTS

4790 BROADWAY | ENERGY ANALYSIS	REQUIRED U-FACTORS PER ASHRAE 90.1-2013 TABLE 5.5-4 = U- BASELINE		
TOTAL ABOVE GRADE EXTERIOR WALL	80,424		100%
TOTAL OPAQUE ELEMENTS	58,672		73%
TOTAL FENESTRATION	21,752		27%

WALL ASSEMBLY TYPE	SF	PERCENTAGE	U-FACTOR
FENESTRATION			
VISION GLASS	16020	19.92%	
STOREFRONT	992	1.23%	
DOOR	0	0.00%	
LOUVER	4,740	5.89%	
OPAQUE ELEMENTS			
BRICK ASSEMBLY	35,266	43.85%	0.0450
BRICK ASSEMBLY SLAB EDGE	3,102	3.86%	0.1064
PRECAST PANEL	3,938	4.90%	
PRECAST PANEL SLAB EDGE	218	0.27%	
BRICK INSET PANEL	3,836	4.77%	
BRICK INSET PANEL SLAB EDGE	235	0.29%	
ALUCO BOND SLAB COVER	1,333	1.66%	
LOT LINE WALL	6,597	8.20%	
EIFS ASSEMBLY	3,595	4.47%	0.0580
EIFS ASSEMBLY SLAB EDGE	552	0.69%	0.1217

TOTAL ABOVE GRADE EXTERIOR WALL	80,424	100.00%	

CHART 1

Client:

RANGER PROPERTIES
4790 BROADWAY
NEW YORK, NY 10034

Architect:

FOGARTY FINGER
architecture | interiors

69 Walker St, New York, NY 10013
t 212 966 7450 f 212 966 7444

Structural:

Thornton Tomasetti
51 Madison Avenue
New York, NY 10010
Tel 917.661.7800

MEP / FP:

Concessi Engineering, PC
499 7th Avenue, 11th Floor South Tower
New York, NY 10018
Tel 212.629.6810

GEOTECH:

FNA Engineering Services, PC
670 Bergen Boulevard, Floor 2
Ridgefield, NJ 07657
Tel 201.241.2444

FACADE:

Simpson Gumpertz & Heger
550 7th Avenue, 10th Floor
New York, NY 10018
Tel 212.271.7000

CODE:

Metropolis
22 Courtland Street, 10th Floor
New York, NY 10007
Tel 212.233.6344

No.	Date	Issue
02	02.06.2019	DD ESTIMATING
01	11.20.2018	SCHEMATIC DESIGN

Project:

4790 BROADWAY
NEW YORK, NY 10034

Drawing Title:

FACADE
CALCULATIONS

Seal & Signature:

DATE (MM-DD-YY): 02-05-2019
PROJECT No.:
DRAWING BY: ...
CHK BY: ...
DWG. No.: EN-001.00
CADD FILE No.:

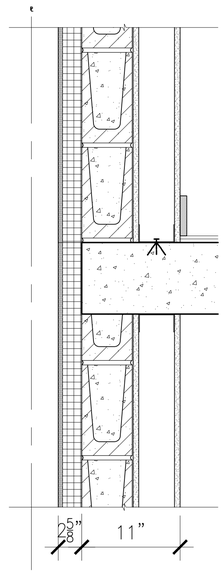

TYPICAL METAL PANEL ASSEMBLY (EIFS-03)

	R-VALUE
EIFS SYSTEM ON 2" RIGID INSULATION ON 6" CMU BLOCKS 5/8" GYPSUM SHEATHING ON 4" STUD W/ R19 BATT INSULATION IN STUD CAVITY AND 5/8" GYP. BOARD ON INTERIOR FINISH	
ASSEMBLY R-VALUE	
ASSEMBLY U-FACTOR	

TYPICAL EIFS ASSEMBLY 2

SCALE: 1-1/2"= 1'-0"

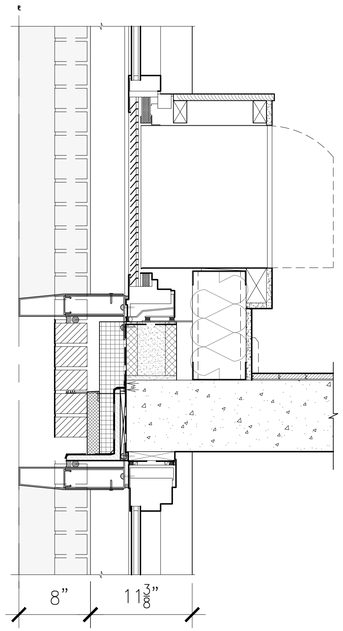

TYPICAL BRICK WALL ASSEMBLY (BV-01,BV-02)

	R-VALUE
4" BRICK VENEER EXTERIOR AIR FILM AIR SPACE 3" RIGID INSULATION (R5/INCH) 5/8" DENSEGLASS 6" MINERAL FIBER CAVITY INSULATION IN 6" MTL STUDS 16"O.C. 5/8" G.W.B INTERIOR AIR FILM	
ASSEMBLY R-VALUE	
ASSEMBLY U-FACTOR	

TYPICAL BRICK WALL ASSEMBLY 1

SCALE: 1-1/2"= 1'-0"

Client:

RANGER PROPERTIES
4790 BROADWAY
NEW YORK, NY 10034

Architect:

FOGARTY FINGER
architecture | interiors

69 Walker St, New York, NY 10013
t 212 966 7450 f 212 966 7444

Structural:

Thornton Tomasetti
51 Madison Avenue
New York, NY 10010
Tel 917.661.7800

MEP / FP:

Concessi Engineering, PC
499 7th Avenue, 11th Floor South Tower
New York, NY 10018
Tel 212.629.6810

GEOTECH:

FNA Engineering Services, PC
670 Bergen Boulevard, Floor 2
Ridgefield, NJ 07657
Tel 201.241.2444

FACADE:

Simpson Gumpertz & Heger
550 7th Avenue, 10th Floor
New York, NY 10018
Tel 212.271.7000

CODE:

Metropolis
22 Courtland Street, 10th Floor
New York, NY 10007
Tel 212.233.6344

No.	Date	Issue
02	02.06.2019	DD ESTIMATING
01	11.20.2018	SCHEMATIC DESIGN

Project:

4790 BROADWAY
NEW YORK, NY 10034

Drawing Title:

TYPICAL WALL ASSEMBLY TYPES

Seal & Signature:

DATE (MM-DD-YY): 02-05-2019
PROJECT No.:
DRAWING BY: --
CHK BY: --
DWG No.: EN-003.00
CADD FILE No.:

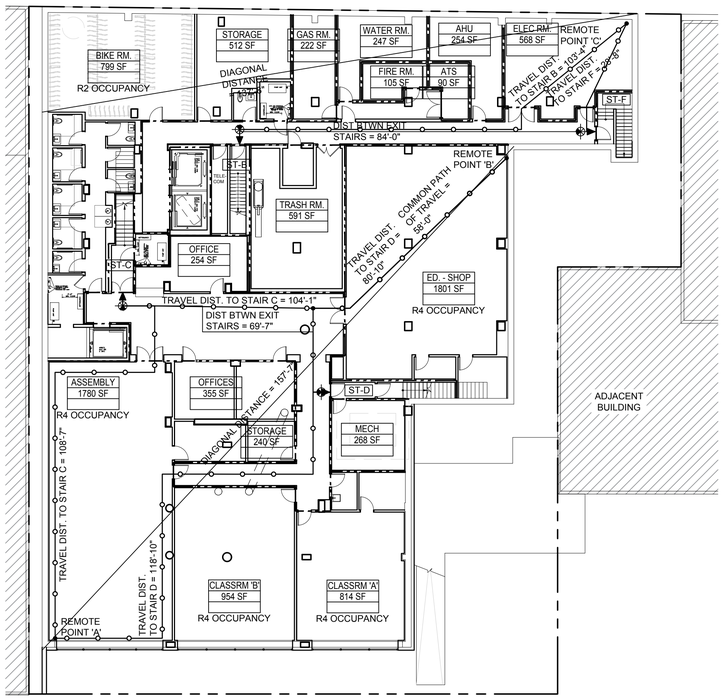

1 CELLAR LIFE SAFETY PLAN
SCALE: 1/16"=1'-0"

EGRESS CALCULATIONS (B.O.H)	SF*	SF/OCCUPANT	OCCUPANT LOAD	NYC IBC 2014
STORAGE/MECHANICAL/TRASH RM.	2,589	300	9	TABLE 1004.1.1
BIKE RM.	799	100	8	
TOTAL	3,388		17	
EGRESS CALCULATIONS (STEM)	**SF***	**SF/OCCUPANT**	**OCCUPANT LOAD**	**NYC IBC 2014**
OFFICES	609	100	7	TABLE 1004.1.1
STORAGE/MECHANICAL RM.	508	300	2	
CLASSROOM 'A' (GROUP E)	814	20	41	
CLASSROOM 'B' (GROUP E)	954	20	48	
ASSEMBLY (GROUP A-3)	1780	15	119	
WORKSHOP (GROUP E)	1801	50	37	
TOTAL	13,242		254	

EGRESS STAIRS (B.O.H)	STAIR WIDTH (IN)	STAIR CAPACITY (÷ 0.3)	NYC IBC 2014
STAIR F	44	147	TABLE 1005.1
STAIR B	44	147	
TOTAL		293	293 > 17 COMPLIES
EGRESS STAIRS (STEM)	**STAIR WIDTH (IN)**	**STAIR CAPACITY (÷ 0.3)**	**NYC IBC 2014**
STAIR C	60	200	
STAIR D	44	147	
TOTAL		347	347 > 254 COMPLIES
EGRESS DOORS (B.O.H)	**DOOR WIDTH (IN)**	**DOOR CAPACITY (÷ 0.2)**	**NYC IBC 2014**
EXIT DOOR STAIR F	36	180	TABLE 1005.1
EXIT DOOR STAIR B	36	180	
TOTAL		360	360 > 17 COMPLIES
EGRESS DOORS (STEM)	**DOOR WIDTH (IN)**	**DOOR CAPACITY (÷ 0.2)**	**NYC IBC 2014**
EXIT DOOR STAIR C	60	300	
EXIT DOOR STAIR D	36	180	
TOTAL		480	480 > 254 COMPLIES

TRAVEL DISTANCE (POINT 'A')	TRAVEL DISTANCE (POINT 'A')	NYC IBC 2014
COMMON PATH FROM PT 'A'	-	TABLE 1028.7
TO EXIT DOOR STAIR C	108' - 7" < 150' COMPLIES	
TO EXIT DOOR STAIR D	118' - 10" < 250' COMPLIES	
TRAVEL DISTANCE (POINT 'B')		**NYC IBC 2014**
COMMON PATH FROM PT 'B'	58' - 0" < 75' COMPLIES	TABLE 1016.1
TO EXIT DOOR STAIR C	104' - 1" < 150' COMPLIES	
TO EXIT DOOR STAIR D	80' - 10" < 250' COMPLIES	
TRAVEL DISTANCE (POINT 'C')		**NYC IBC 2014**
COMMON PATH FROM PT 'C'	-	TABLE 1016.1
TO EXIT DOOR STAIR F	28' - 8" < 300' COMPLIES	
TO EXIT DOOR STAIR B	103' - 4" < 300' COMPLIES	

REQUIRED PLUMBING FIXTURES (NYC IBC 2014) (TABLE 1014.3)

OCCUPANT LOAD (PUBLIC ASSEMBLY)		OCC/ SEX	WC	URINAL	LAV	DRINK FNTN	SER. SINK
123	M	61	2	0	2	2	1
	F	62	2	0	2		
OCCUPANT LOAD (EDUCATIONAL/BUSINESS)			WC	URINAL	LAV		
130			3	0	3		

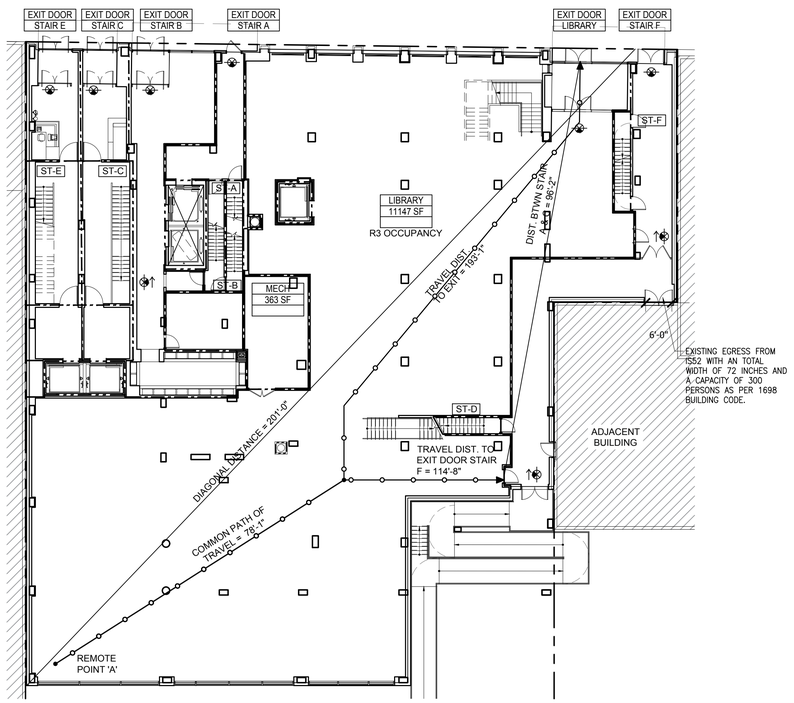

2 FIRST FLOOR LIFE SAFETY PLAN
SCALE: 1/16"=1'-0"

EGRESS CALCULATIONS	SF*	SF/OCCUPANT	OCCUPANT LOAD	NYC IBC 2014
ACCESSORY STORAGE/MECH	363	300	2	TABLE 1004.1.1
LIBRARY (GROUP B)	11,147	STATED OCCUPANCY	122	STATED OCCUPANCY
TOTAL	11,510		124	

EGRESS STAIRS (ELIZA)	STAIR WIDTH (IN)	STAIR CAPACITY (÷ 0.3)	NYC IBC 2014
STAIR A	44	147	TABLE 1005.1
STAIR B	44	147	OCC. FROM CELLAR AND 2ND FL.
TOTAL		293	293 > 79 COMPLIES
EGRESS STAIRS (ACTS)	**STAIR WIDTH (IN)**	**STAIR CAPACITY (÷ 0.3)**	**OCC. FROM CELLAR**
STAIR C	48	160	160 > 127 COMPLIES
EGRESS STAIRS (STEM)	**STAIR WIDTH (IN)**	**STAIR CAPACITY (÷ 0.3)**	**OCC. FROM CELLAR**
STAIR D	44	147	147 > 127 COMPLIES
EGRESS STAIRS (UPK)	**STAIR WIDTH (IN)**	**STAIR CAPACITY (÷ 0.3)**	**OCC. FROM 2ND FL.**
STAIR E	48	160	160 > 75 COMPLIES
EGRESS STAIRS (LIBRARY)	**STAIR WIDTH (IN)**	**STAIR CAPACITY (÷ 0.3)**	**OCC. FROM CELLAR 2ND FL.**
STAIR F	44	147	147 > 95 COMPLIES
EGRESS DOORS (ELIZA)	**DOOR WIDTH (IN)**	**DOOR CAPACITY (÷ 0.2)**	OCC. FROM CELLAR AND 2ND FL.
EXIT DOOR STAIR A	40	200	TABLE 1005.1
EXIT DOOR STAIR B	72	360	
TOTAL		560	560 > 79 COMPLIES
EGRESS DOORS (ACTS)	**DOOR WIDTH (IN)**	**DOOR CAPACITY (÷ 0.2)**	OCC. FROM CELLAR
EXIT DOOR STAIR C	72	360	360 > 127 COMPLIES
EGRESS DOORS (STEM)	**DOOR WIDTH (IN)**	**DOOR CAPACITY (÷ 0.2)**	OCC. FROM CELLAR
EXIT DOOR STAIR E	72	360	360 > 127 COMPLIES
EGRESS DOORS (EASEMENT)	**DOOR WIDTH (IN)**	**DOOR CAPACITY (÷ 0.2)**	**NYC IBC 2014**
EXIT DOOR STAIR F	76	380	380 > 95 COMPLIES
EGRESS DOORS (LIBRARY)	**DOOR WIDTH (IN)**	**DOOR CAPACITY (÷ 0.2)**	**NYC IBC 2014**
EXIT DOOR LIBRARY	72	360	360 > 124 COMPLIES

TRAVEL DISTANCE (POINT 'A')	TRAVEL DISTANCE (POINT 'A')	NYC IBC 2014
COMMON PATH FROM PT 'A'	78' - 1" > 100' COMPLIES	TABLE 1028.7
TO EXIT DOOR STAIR F	114' - 8" < 300' COMPLIES	
TO EXIT DOOR LIBRARY	193' - 1" < 300' COMPLIES	

BUILDING HEIGHT AND AREA			NYC BC 2014
CONSTRUCTION CLASS	TYPE 1B (UL FOR HEIGHT & AREA)		TABLE 503
FLOOR AREA	17,744 SF	COMPLIES	
HEIGHT IN STORIES	14 STORIES	COMPLIES	
HEIGHT IN FEET	154'-3"	COMPLIES	

REQUIRED PLUMBING FIXTURES (NYC IBC 2014) (TABLE 1014.3)

OCCUPANT LOAD (BUSINESS)		OCC / SEX	WC	URINAL	LAV	DRINK FNTN	SER. SINK
122	M	61	3	0	3	2	1
	F	61	3	0	3		

LEGEND:

- 1 HR RATED SEPARATION
- 2 HR RATED SEPARATION
- 3HR RATED SEPARATION
- NON RATED PARTITION
- HABITABLE SPACE
- LANDSCAPING LIMITED TO GRASS THAT IS UNDER 12"
- ASSEMBLY W/O FIXED SEATS - UNCONCENTRATED
- GENERAL TRAVEL DISTANCE
- TRAVEL DISTANCE WITHIN DWELLING UNIT
- (A) 3/4 HR FIRE PROOF SELF CLOSING
- (B) 1 1/2 HR FIRE PROOF SELF CLOSING
- (C) 3 HR FIRE PROOF SELF CLOSING
- (SD) SMOKE AND CO DETECTOR
- DIRECTIONAL EXIT SIGNS

GENERAL NOTES:

1. THE BUILDING IS FULLY SPRINKLERED PER NFPA 13

2. AS PER CODE SECTION 508.3.3 THE REQUIRED AND PROVIDED FIRE SEPARATION BETWEEN CERTAIN AREAS ARE AS FOLLOWS:
- BTW RESIDENTIAL UNITS: 1HR
- BTW RESIDENTIAL UNIT & CORRIDOR: 2HR
- COMPACTOR ROOM: 3HR

3. BUILDINGS BULLETIN 2017-DRAFT TO BE REFERENCED FOR 200 SF/ OCCUPANT IN LIEU OF 15 SF/ OCCUPANT AT OUTDOOR AREAS.

4. NOTE THAT LANDSCAPING AT THE 2ND FLOOR TERRACE IS NOT DEDUCTED FROM THE SF SHOWN, ALTHOUGH THE DRAFT BULLETIN STATES THIS DEDUCTION MAY BE USED.

5. REFERENCE BC 1004.2 IN ADDITION TO THE BUILDINGS BULLETIN 2017-DRAFT FOR 5TH FLOOR OUTDOOR AREA.

6. PLUMBING FIXTURES TO BE PROVIDED BY TENANT FIT-OUT.

Client:

RANGER PROPERTIES
4790 BROADWAY
NEW YORK, NY 10034

Architect:

FOGARTY FINGER architecture | interiors
69 Walker St, New York, NY 10013
t 212 966 7450 f 212 966 7444

Structural:

Thornton Tomasetti
51 Madison Avenue
New York, NY 10010
Tel 917.661.7800

MEP / FP:

Concessi Engineering, PC
499 7th Avenue, 11th Floor South Tower
New York, NY 10018
Tel 212.629.6810

GEOTECH:

FNA Engineering Services, PC
670 Bergen Boulevard, Floor 2
Ridgefield, NJ 07657
Tel 201.241.2444

FAÇADE:

Simpson Gumpertz & Heger
550 7th Avenue, 10th Floor
New York, NY 10018
Tel 212.271.7000

CODE:

Metropolis
22 Courtland Street, 10th Floor
New York, NY 10007
Tel 212.233.6344

No.	Date	Issue
02	02.06.2019	DD ESTIMATING
01	11.20.2018	SCHEMATIC DESIGN

Project:

4790 BROADWAY
NEW YORK, NY 10034

Drawing Title:

CELLAR & 1ST FLOOR LIFE SAFETY PLAN

Seal & Signature:

DATE (MM-DD-YY): 02-05-2019
PROJECT No.:
DRAWING BY: --
CHK BY: --
DWG. No.: A-001.00
CADD FILE No.:

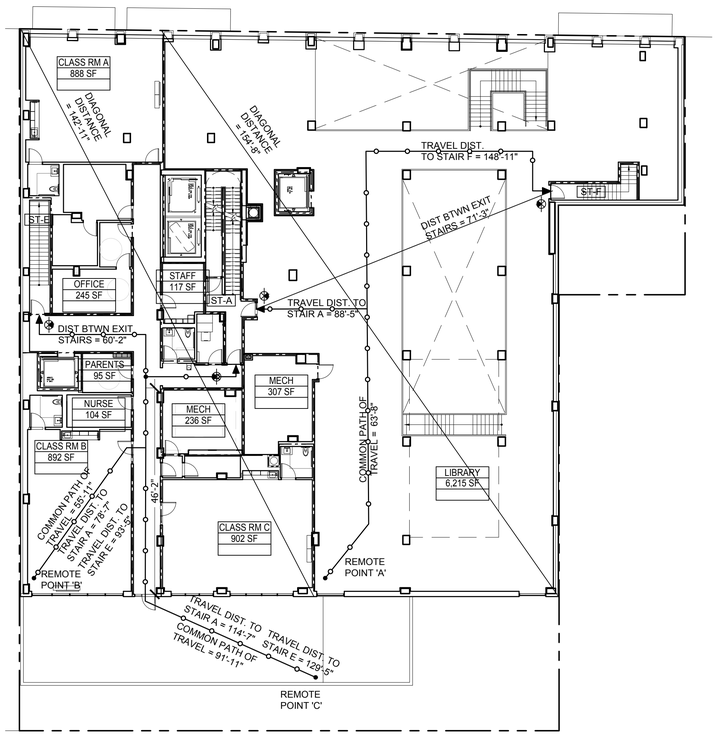

1 2ND FLOOR LIFE SAFETY PLAN
SCALE: 1/16"=1'-0"

EGRESS CALCULATIONS (LIBRARY)	SF*	SF/OCCUPANT	OCCUPANT LOAD	NYC IBC 2014
MECHANICAL RM.	307	300	2	TABLE 1004.1.1
LIBRARY (GROUP B)	6,214	STATED OCCUPANCY	84	
TOTAL	6,521		86	

EGRESS CALCULATIONS (UPK)	SF*	SF/OCCUPANT	OCCUPANT LOAD	NYC IBC 2014
MECHANICAL RM.	236	300	1	
OFFICE (GROUP B)	245	100	3	
STAFF (GROUP B)	117	100	2	
NURSE (GROUP B)	104	100	2	
PARENTS RM (GROUP B)	95	100	1	
EDUCATIONAL AREA 'A' (GROUP E)	888	20	45	
EDUCATIONAL AREA 'B' (GROUP E)	892	20	45	
EDUCATIONAL AREA 'C' (GROUP E)	902	20	46	
TOTAL	3,479		145	

EGRESS STAIRS (UPK)	STAIR WIDTH (IN)	STAIR CAPACITY (÷ 0.3)	NYC IBC 2014
STAIR A	44	147	TABLE 1005.1
STAIR E	51	170	
TOTAL		317	317 > 145 COMPLIES

EGRESS STAIRS (LIBRARY)	STAIR WIDTH (IN)	STAIR CAPACITY (÷ 0.3)	NYC IBC 2014
STAIR F	44	147	147 > 86 COMPLIES

EGRESS DOORS (UPK)	DOOR WIDTH (IN)	DOOR CAPACITY (÷ 0.2)	NYC IBC 2014
EXIT DOOR STAIR A	38	190	TABLE 1005.1
EXIT DOOR STAIR A	38	190	TABLE 1005.1
EXIT DOOR STAIR E	50	250	
TOTAL		630	630 > 145 COMPLIES

EGRESS DOORS (LIBRARY)	DOOR WIDTH (IN)	DOOR CAPACITY (÷ 0.2)	NYC IBC 2014
EXIT DOOR STAIR F	36	180	180 > 86 COMPLIES

TRAVEL DISTANCE (POINT 'A')		NYC IBC 2014
COMMON PATH FROM PT 'A'	63' - 8" < 100' COMPLIES	TABLE 1016.1
TO EXIT DOOR STAIR A	88' - 5" < 300' COMPLIES	
TO EXIT DOOR STAIR F	148' - 11" < 300' COMPLIES	

TRAVEL DISTANCE (POINT 'B')		NYC IBC 2014
COMMON PATH FROM PT 'B'	55' - 11" < 75' COMPLIES	TABLE 1016.1
TO EXIT DOOR STAIR A	78' - 7" < 150' COMPLIES	
TO EXIT DOOR STAIR E	93' - 5" < 250' COMPLIES	

TRAVEL DISTANCE (POINT 'C')		NYC IBC 2014
COMMON PATH FROM PT 'B'	91' - 11" < 125' COMPLIES	TABLE 1016.1
TO EXIT DOOR STAIR A	114' - 7" < 200' COMPLIES	
TO EXIT DOOR STAIR E	129' - 5" < 200' COMPLIES	

STATED OCCUPANCY:

OCCUPANCY GROUP:	AREA:	OCCUPANTS:
BUSINESS	324 SF	3
STACKS	4353 SF	44
READING ROOM	1765 SF	35
MECHANICAL	423 SF	2
TOTAL:	6796 SF	84

REQUIRED PLUMBING FIXTURES (NYC IBC 2014) (TABLE 1014.3)

OCCUPANT LOAD (BUSINESS)		OCC/ SEX	WC	URINAL	LAV	DRINK FNTN	SER. SINK
84	M	42	2	0	2	1	1
	F	42	2	0	2		

LEGEND:

- 1 HR RATED SEPARATION
- 2 HR RATED SEPARATION
- 3HR RATED SEPARATION
- NON RATED PARTITION
- HABITABLE SPACE
- LANDSCAPING LIMITED TO GRASS THAT IS UNDER 12"
- ASSEMBLY W/O FIXED SEATS - UNCONCENTRATED
- GENERAL TRAVEL DISTANCE
- TRAVEL DISTANCE WITHIN DWELLING UNIT
- (A) 3/4 HR FIRE PROOF SELF CLOSING
- (B) 1 1/2 HR FIRE PROOF SELF CLOSING
- (C) 3 HR FIRE PROOF SELF CLOSING
- (SD) SMOKE AND CO DETECTOR
- DIRECTIONAL EXIT SIGNS

GENERAL NOTES:

1. THE BUILDING IS FULLY SPRINKLERED PER NFPA 13

2. AS PER CODE SECTION 508.3.3 THE REQUIRED AND PROVIDED FIRE SEPARATION BETWEEN CERTAIN AREAS ARE AS FOLLOWS:
- BTW RESIDENTIAL UNITS: 1HR
- BTW RESIDENTIAL UNIT & CORRIDOR: 2HR
- COMPACTOR ROOM: 3HR

3. BUILDINGS BULLETIN 2017-DRAFT TO BE REFERENCED FOR 200 SF/ OCCUPANT IN LIEU OF 15 SF/ OCCUPANT AT OUTDOOR AREAS.

4. NOTE THAT LANDSCAPING AT THE 2ND FLOOR TERRACE IS NOT DEDUCTED FROM THE SF SHOWN, ALTHOUGH THE DRAFT BULLETIN STATES THIS DEDUCTION MAY BE USED.

5. REFERENCE BC 1004.2 IN ADDITION TO THE BUILDINGS BULLETIN 2017-DRAFT FOR 5TH FLOOR OUTDOOR AREA.

6. PLUMBING FIXTURES TO BE PROVIDED BY TENANT FIT-OUT.

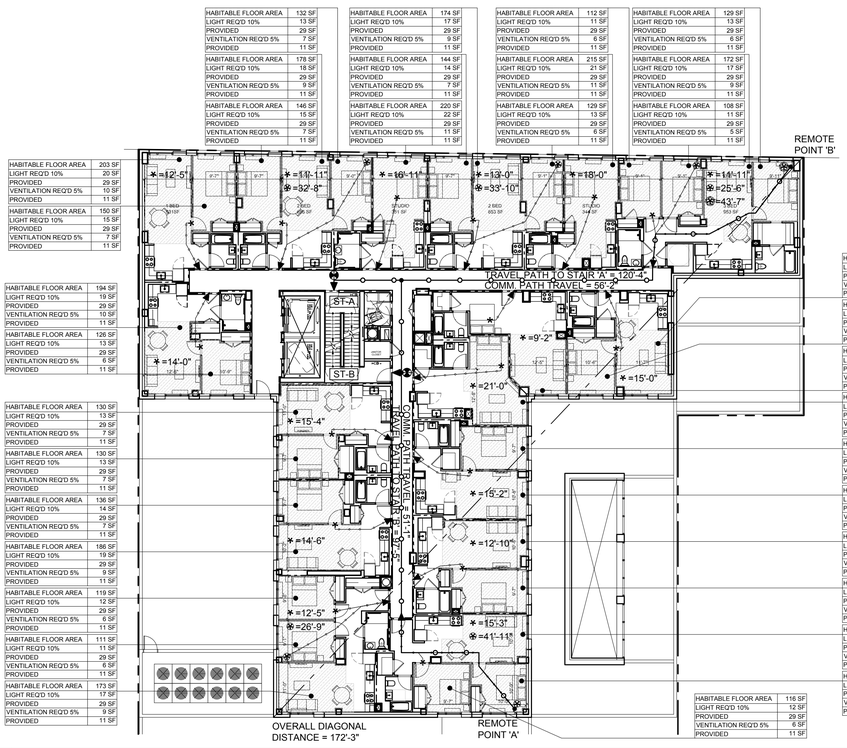

HABITABLE FLOOR AREA	132 SF
LIGHT REQ'D 10%	13 SF
PROVIDED	29 SF
VENTILATION REQ'D 5%	7 SF
PROVIDED	11 SF
HABITABLE FLOOR AREA	178 SF
LIGHT REQ'D 10%	18 SF
PROVIDED	29 SF
VENTILATION REQ'D 5%	9 SF
PROVIDED	11 SF
HABITABLE FLOOR AREA	146 SF
LIGHT REQ'D 10%	15 SF
PROVIDED	29 SF
VENTILATION REQ'D 5%	7 SF
PROVIDED	11 SF

HABITABLE FLOOR AREA	174 SF
LIGHT REQ'D 10%	17 SF
PROVIDED	29 SF
VENTILATION REQ'D 5%	9 SF
PROVIDED	11 SF
HABITABLE FLOOR AREA	144 SF
LIGHT REQ'D 10%	14 SF
PROVIDED	29 SF
VENTILATION REQ'D 5%	7 SF
PROVIDED	11 SF
HABITABLE FLOOR AREA	220 SF
LIGHT REQ'D 10%	22 SF
PROVIDED	29 SF
VENTILATION REQ'D 5%	11 SF
PROVIDED	11 SF

HABITABLE FLOOR AREA	112 SF
LIGHT REQ'D 10%	11 SF
PROVIDED	29 SF
VENTILATION REQ'D 5%	6 SF
PROVIDED	11 SF
HABITABLE FLOOR AREA	215 SF
LIGHT REQ'D 10%	21 SF
PROVIDED	29 SF
VENTILATION REQ'D 5%	11 SF
PROVIDED	11 SF
HABITABLE FLOOR AREA	129 SF
LIGHT REQ'D 10%	13 SF
PROVIDED	29 SF
VENTILATION REQ'D 5%	6 SF
PROVIDED	11 SF

HABITABLE FLOOR AREA	129 SF
LIGHT REQ'D 10%	13 SF
PROVIDED	29 SF
VENTILATION REQ'D 5%	6 SF
PROVIDED	11 SF
HABITABLE FLOOR AREA	172 SF
LIGHT REQ'D 10%	17 SF
PROVIDED	29 SF
VENTILATION REQ'D 5%	9 SF
PROVIDED	11 SF
HABITABLE FLOOR AREA	108 SF
LIGHT REQ'D 10%	11 SF
PROVIDED	29 SF
VENTILATION REQ'D 5%	5 SF
PROVIDED	11 SF

HABITABLE FLOOR AREA	203 SF
LIGHT REQ'D 10%	20 SF
PROVIDED	29 SF
VENTILATION REQ'D 5%	10 SF
PROVIDED	11 SF
HABITABLE FLOOR AREA	150 SF
LIGHT REQ'D 10%	15 SF
PROVIDED	29 SF
VENTILATION REQ'D 5%	7 SF
PROVIDED	11 SF

HABITABLE FLOOR AREA	194 SF
LIGHT REQ'D 10%	19 SF
PROVIDED	29 SF
VENTILATION REQ'D 5%	10 SF
PROVIDED	11 SF
HABITABLE FLOOR AREA	126 SF
LIGHT REQ'D 10%	13 SF
PROVIDED	29 SF
VENTILATION REQ'D 5%	6 SF
PROVIDED	11 SF

HABITABLE FLOOR AREA	130 SF
LIGHT REQ'D 10%	13 SF
PROVIDED	29 SF
VENTILATION REQ'D 5%	7 SF
PROVIDED	11 SF
HABITABLE FLOOR AREA	130 SF
LIGHT REQ'D 10%	13 SF
PROVIDED	29 SF
VENTILATION REQ'D 5%	7 SF
PROVIDED	11 SF
HABITABLE FLOOR AREA	136 SF
LIGHT REQ'D 10%	14 SF
PROVIDED	29 SF
VENTILATION REQ'D 5%	7 SF
PROVIDED	11 SF
HABITABLE FLOOR AREA	186 SF
LIGHT REQ'D 10%	19 SF
PROVIDED	29 SF
VENTILATION REQ'D 5%	9 SF
PROVIDED	11 SF
HABITABLE FLOOR AREA	119 SF
LIGHT REQ'D 10%	12 SF
PROVIDED	29 SF
VENTILATION REQ'D 5%	6 SF
PROVIDED	11 SF
HABITABLE FLOOR AREA	111 SF
LIGHT REQ'D 10%	11 SF
PROVIDED	29 SF
VENTILATION REQ'D 5%	6 SF
PROVIDED	11 SF
HABITABLE FLOOR AREA	173 SF
LIGHT REQ'D 10%	17 SF
PROVIDED	29 SF
VENTILATION REQ'D 5%	9 SF
PROVIDED	11 SF

HABITABLE FLOOR AREA	177 SF
LIGHT REQ'D 10%	18 SF
PROVIDED	29 SF
VENTILATION REQ'D 5%	9 SF
PROVIDED	11 SF
HABITABLE FLOOR AREA	129 SF
LIGHT REQ'D 10%	13 SF
PROVIDED	29 SF
VENTILATION REQ'D 5%	6 SF
PROVIDED	11 SF
HABITABLE FLOOR AREA	153 SF
LIGHT REQ'D 10%	15 SF
PROVIDED	29 SF
VENTILATION REQ'D 5%	8 SF
PROVIDED	11 SF
HABITABLE FLOOR AREA	210 SF
LIGHT REQ'D 10%	21 SF
PROVIDED	29 SF
VENTILATION REQ'D 5%	11 SF
PROVIDED	11 SF
HABITABLE FLOOR AREA	139 SF
LIGHT REQ'D 10%	14 SF
PROVIDED	29 SF
VENTILATION REQ'D 5%	7 SF
PROVIDED	11 SF
HABITABLE FLOOR AREA	177 SF
LIGHT REQ'D 10%	18 SF
PROVIDED	29 SF
VENTILATION REQ'D 5%	9 SF
PROVIDED	11 SF
HABITABLE FLOOR AREA	196 SF
LIGHT REQ'D 10%	20 SF
PROVIDED	29 SF
VENTILATION REQ'D 5%	10 SF
PROVIDED	11 SF
HABITABLE FLOOR AREA	147 SF
LIGHT REQ'D 10%	15 SF
PROVIDED	29 SF
VENTILATION REQ'D 5%	7 SF
PROVIDED	11 SF
HABITABLE FLOOR AREA	175 SF
LIGHT REQ'D 10%	17 SF
PROVIDED	29 SF
VENTILATION REQ'D 5%	9 SF
PROVIDED	11 SF
HABITABLE FLOOR AREA	119 SF
LIGHT REQ'D 10%	12 SF
PROVIDED	29 SF
VENTILATION REQ'D 5%	6 SF
PROVIDED	11 SF

HABITABLE FLOOR AREA	116 SF
LIGHT REQ'D 10%	12 SF
PROVIDED	29 SF
VENTILATION REQ'D 5%	6 SF
PROVIDED	11 SF

2 3RD FLOOR LIFE SAFETY PLAN
SCALE: 1/16"=1'-0"

MAX FLOOR AREA ALLOWANCES PER OCCUPANT CALCULATIONS NYC BC 2014 TABLE 1003.1.1

DWELLING UNIT AREA	RESIDENTIAL PER OCCUPANT (SF)	PROPOSED # OF OCCUPANTS	
9,314 SF	200	47	

EGRESS STAIRS	STAIR WIDTH (IN)	STAIR CAPACITY (÷ 0.3)	NYC IBC 2014
STAIR A	44	147	TABLE 1005.1
STAIR B	44	147	
TOTAL		293	293 > 47 COMPLIES

EGRESS DOORS	DOOR WIDTH (IN)	DOOR CAPACITY (÷ 0.2)	NYC IBC 2014
EXIT DOOR STAIR A	38	190	TABLE 1005.1
EXIT DOOR STAIR B	38	190	
TOTAL		380	380 > 47 COMPLIES

STAIR REMOTENESS	NYC IBC 2014
DIAGONAL DISTANCE = 172'-3"	
DISTANCE BETWEEN STAIRS 'A' & 'B' : 40'-0" < 1/3(172'-3") DOES NOT COMPLY	

EXIT ACCESS TRAVEL DISTANCE *TABLE 1016 BC 2014*			
	REQUIRED DIST.	MAX. PROPOSED DIST.	
COMMON PATH OF TRAVEL	125'-0" (MAXIMUM)	56'-2"	CONFORMS
MAX. TRAVEL DISTANCE ALLOWED	200'-0" (MAXIMUM)	120'-4"	CONFORMS

UNIT COUNT							
STUDIO	1 BED	2 BED	STUDIO UFAS	1 BED UFAS	2 BED UFAS	3 BED UFAS	TOTAL
3	6	3	1	1	1	1	16

NATURAL VENTILATION *MINIMUM OPENINGS 1203.4.1.4.1 BC 2014*	
MIN. OPENINGS MINIMUM 5% OF THE FLOOR AREA THAT NEEDS VENTILATION	CONFORMS
NATURAL VENTILATION *MINIMUM OPENINGS 1203.4.1.4.1 BC 2014*	
MIN. OPENINGS MINIMUM 10% OF THE FLOOR AREA OF ROOM BEING SERVED	CONFORMS

Client:

RANGER PROPERTIES
4790 BROADWAY
NEW YORK, NY 10034

Architect:

FOGARTY FINGER
architecture | interiors
69 Walker St, New York, NY 10013
t 212 966 7450 f 212 966 7444

Structural:

Thornton Tomasetti
51 Madison Avenue
New York, NY 10010
Tel 917.661.7800

MEP / FP:

Concessi Engineering, PC
499 7th Avenue, 11th Floor South Tower
New York, NY 10018
Tel 212.629.6810

GEOTECH:

FNA Engineering Services, PC
670 Bergen Boulevard, Floor 2
Ridgefield, NJ 07657
Tel 201.241.2444

FACADE:

Simpson Gumpertz & Heger
550 7th Avenue, 10th Floor
New York, NY 10018
Tel 212.271.7000

CODE:

Metropolis
22 Courtland Street, 10th Floor
New York, NY 10007
Tel 212.233.6344

No.	Date	Issue
02	02.06.2019	DD ESTIMATING
01	11.20.2018	SCHEMATIC DESIGN

Project:

4790 BROADWAY
NEW YORK, NY 10034

Drawing Title:

2ND & 3RD FLOOR LIFE SAFETY PLAN

Seal & Signature:

DATE (MM-DD-YY): 02-05-2019
PROJECT No.:
DRAWING BY: --
CHK BY: --
DWG. No.: A-002.00
CADD FILE No.:

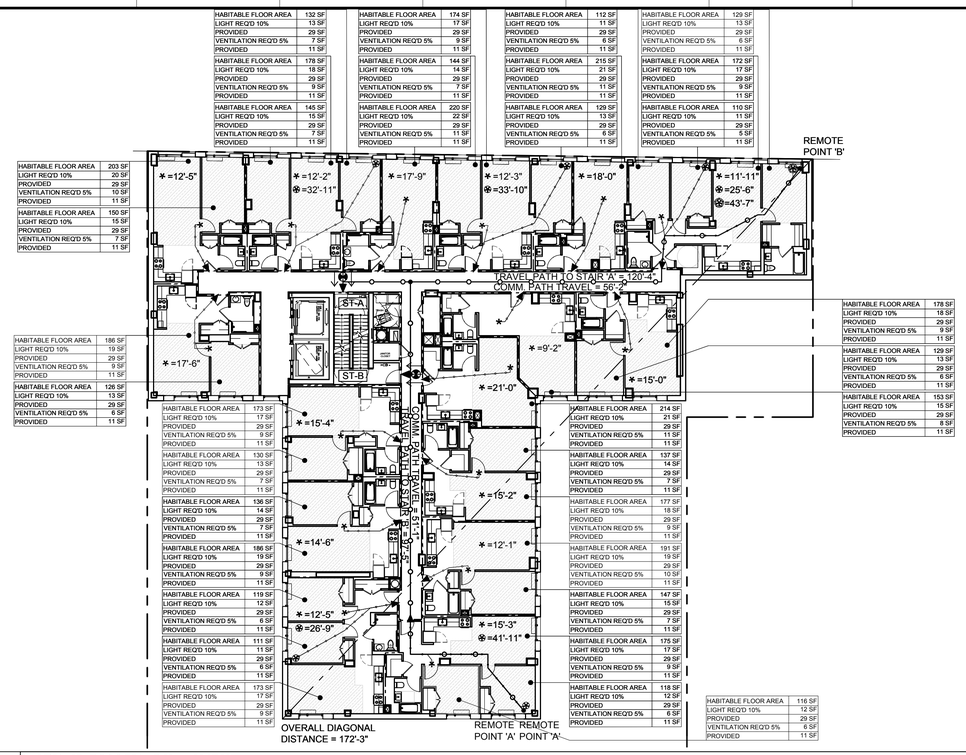

1 4TH-10TH FLOORS LIFE SAFETY PLAN
SCALE: 1/16"=1'-0"

MAX FLOOR AREA ALLOWANCES PER OCCUPANT CALCULATIONS NYC BC 2014 TABLE 1003.1.1			
DWELLING UNIT AREA	**RESIDENTIAL PER OCCUPANT (SF)**	**PROPOSED # OF OCCUPANTS**	
9314	200	47	
EGRESS STAIRS	**STAIR WIDTH (IN)**	**STAIR CAPACITY** (÷ 0.3)	**NYC IBC 2014**
STAIR A	44	147	TABLE 1005.1
STAIR B	44	147	
TOTAL		293	293 > 47 COMPLIES
EGRESS DOORS	**DOOR WIDTH (IN)**	**DOOR CAPACITY** (÷ 0.2)	**NYC IBC 2014**
EXIT DOOR STAIR A	38	190	TABLE 1005.1
EXIT DOOR STAIR B	38	190	
TOTAL		380	380 > 47 COMPLIES

STAIR REMOTENESS	NYC IBC 2014
DIAGONAL DISTANCE = 172'-3"	
DISTANCE BETWEEN STAIRS 'A' & 'B' : 40'-0" < 1/3(172'-3") DOES NOT COMPLY	

EXIT ACCESS TRAVEL DISTANCE ***TABLE 1016 BC 2014***			
	REQUIRED DIST.	MAX. PROPOSED DIST.	
COMMON PATH OF TRAVEL	125'-0" (MAXIMUM)	56'-2"	CONFORMS
MAX. TRAVEL DISTANCE ALLOWED	200'-0" (MAXIMUM)	120'-4"	CONFORMS

UNIT COUNT							
STUDIO	1 BED	2 BED	STUDIO UFAS	1 BED UFAS	2 BED UFAS	3 BED UFAS	TOTAL
3	6	3	1	1	1	1	16

NATURAL VENTILATION ***MINIMUM OPENINGS 1203.4.1.4.1 BC 2014***	
MIN. OPENINGS MINIMUM 5% OF THE FLOOR AREA THAT NEEDS VENTILATION	CONFORMS
NATURAL VENTILATION ***MINIMUM OPENINGS 1203.4.1.4.1 BC 2014***	
MIN. OPENINGS MINIMUM 10% OF THE FLOOR AREA OF ROOM BEING SERVED	CONFORMS

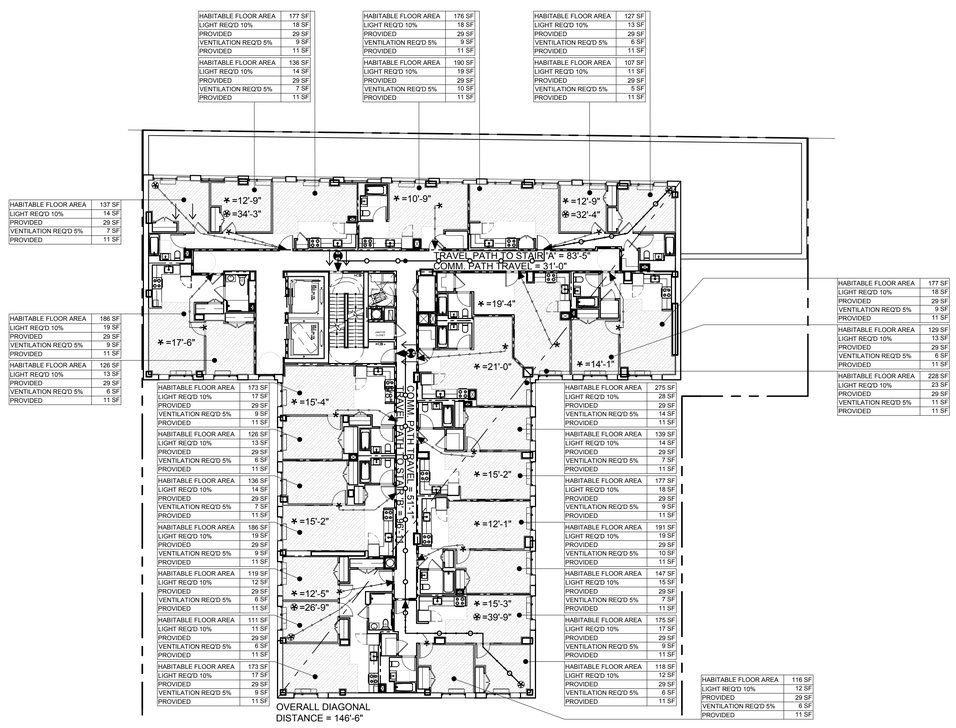

2 11TH-13TH FLOOR LIFE SAFETY PLAN
SCALE: 1/16"=1'-0"

MAX FLOOR AREA ALLOWANCES PER OCCUPANT CALCULATIONS NYC BC 2014 TABLE 1003.1.1			
DWELLING UNIT AREA	**RESIDENTIAL PER OCCUPANT (SF)**	**PROPOSED # OF OCCUPANTS**	
7537	200	38	
EGRESS STAIRS	**STAIR WIDTH (IN)**	**STAIR CAPACITY** (÷ 0.3)	**NYC IBC 2014**
STAIR A	44	147	TABLE 1005.1
STAIR B	44	147	
TOTAL		293	293 > 38 COMPLIES
EGRESS DOORS	**DOOR WIDTH (IN)**	**DOOR CAPACITY** (÷ 0.2)	**NYC IBC 2014**
EXIT DOOR STAIR A	38	190	TABLE 1005.1
EXIT DOOR STAIR B	38	190	
TOTAL		380	380 > 38 COMPLIES

STAIR REMOTENESS	NYC IBC 2014
DIAGONAL DISTANCE = 146'-6"	
DISTANCE BETWEEN STAIRS 'A' & 'B' : 40'-0" < 1/3(146'-6") DOES NOT COMPLY	

EXIT ACCESS TRAVEL DISTANCE ***TABLE 1016 BC 2014***			
	REQUIRED DIST.	MAX. PROPOSED DIST.	
COMMON PATH OF TRAVEL	125'-0" (MAXIMUM)	51'-1"	CONFORMS
MAX. TRAVEL DISTANCE ALLOWED	200'-0" (MAXIMUM)	96'-11"	CONFORMS

UNIT COUNT							
STUDIO	1 BED	2 BED	STUDIO UFAS	1 BED UFAS	2 BED UFAS	3 BED UFAS	TOTAL
3	5	3	0	1	1	0	13

NATURAL VENTILATION ***MINIMUM OPENINGS 1203.4.1.4.1 BC 2014***	
MIN. OPENINGS MINIMUM 5% OF THE FLOOR AREA THAT NEEDS VENTILATION	CONFORMS
NATURAL VENTILATION ***MINIMUM OPENINGS 1203.4.1.4.1 BC 2014***	
MIN. OPENINGS MINIMUM 10% OF THE FLOOR AREA OF ROOM BEING SERVED	CONFORMS

LEGEND:

- 1 HR RATED SEPARATION
- 2 HR RATED SEPARATION
- 3HR RATED SEPARATION
- NON RATED PARTITION
- HABITABLE SPACE
- LANDSCAPING LIMITED TO GRASS THAT IS UNDER 12"
- ASSEMBLY W/O FIXED SEATS - UNCONCENTRATED
- GENERAL TRAVEL DISTANCE
- TRAVEL DISTANCE WITHIN DWELLING UNIT
- (A) 3/4 HR FIRE PROOF SELF CLOSING
- (B) 1 1/2 HR FIRE PROOF SELF CLOSING
- (C) 3 HR FIRE PROOF SELF CLOSING
- (SD) SMOKE AND CO DETECTOR
- DIRECTIONAL EXIT SIGNS

GENERAL NOTES:

1. THE BUILDING IS FULLY SPRINKLERED PER NFPA 13

2. AS PER CODE SECTION 508.3.3 THE REQUIRED AND PROVIDED FIRE SEPARATION BETWEEN CERTAIN AREAS ARE AS FOLLOWS:
- BTW RESIDENTIAL UNITS: 1HR
- BTW RESIDENTIAL UNIT & CORRIDOR: 2HR
- COMPACTOR ROOM: 3HR

3. BUILDINGS BULLETIN 2017-DRAFT TO BE REFERENCED FOR 200 SF/ OCCUPANT IN LIEU OF 15 SF/ OCCUPANT AT OUTDOOR AREAS.

4. NOTE THAT LANDSCAPING AT THE 2ND FLOOR TERRACE IS NOT DEDUCTED FROM THE SF SHOWN, ALTHOUGH THE DRAFT BULLETIN STATES THIS DEDUCTION MAY BE USED.

5. REFERENCE BC 1004.2 IN ADDITION TO THE BUILDINGS BULLETIN 2017-DRAFT FOR 5TH FLOOR OUTDOOR AREA.

6. PLUMBING FIXTURES TO BE PROVIDED BY TENANT FIT-OUT.

Client:
RANGER PROPERTIES
4790 BROADWAY
NEW YORK, NY 10034

Architect:
FOGARTY FINGER architecture | interiors
69 Walker St, New York, NY 10013
t 212 966 7450 f 212 966 7444

Structural:
Thornton Tomasetti
51 Madison Avenue
New York, NY 10010
Tel 917.661.7800

MEP / FP:
Concessi Engineering, PC
499 7th Avenue, 11th Floor South Tower
New York, NY 10018
Tel 212.629.6810

GEOTECH:
FNA Engineering Services, PC
670 Bergen Boulevard, Floor 2
Ridgefield, NJ 07657
Tel 201.241.2444

FACADE:
Simpson Gumpertz & Heger
550 7th Avenue, 10th Floor
New York, NY 10018
Tel 212.271.7000

CODE:
Metropolis
22 Courtland Street, 10th Floor
New York, NY 10007
Tel 212.233.6344

No.	Date	Issue
02	02.06.2019	DD ESTIMATING
01	11.20.2018	SCHEMATIC DESIGN

Project:
4790 BROADWAY
NEW YORK, NY 10034

Drawing Title:
4TH – 13TH FLOOR LIFE SAFETY PLAN

Seal & Signature:

DATE (MM-DD-YY): 02-05-2019
PROJECT No.:
DRAWING BY: –
CHK BY: –
DWG. No.: A-003.00
CADD FILE No.:

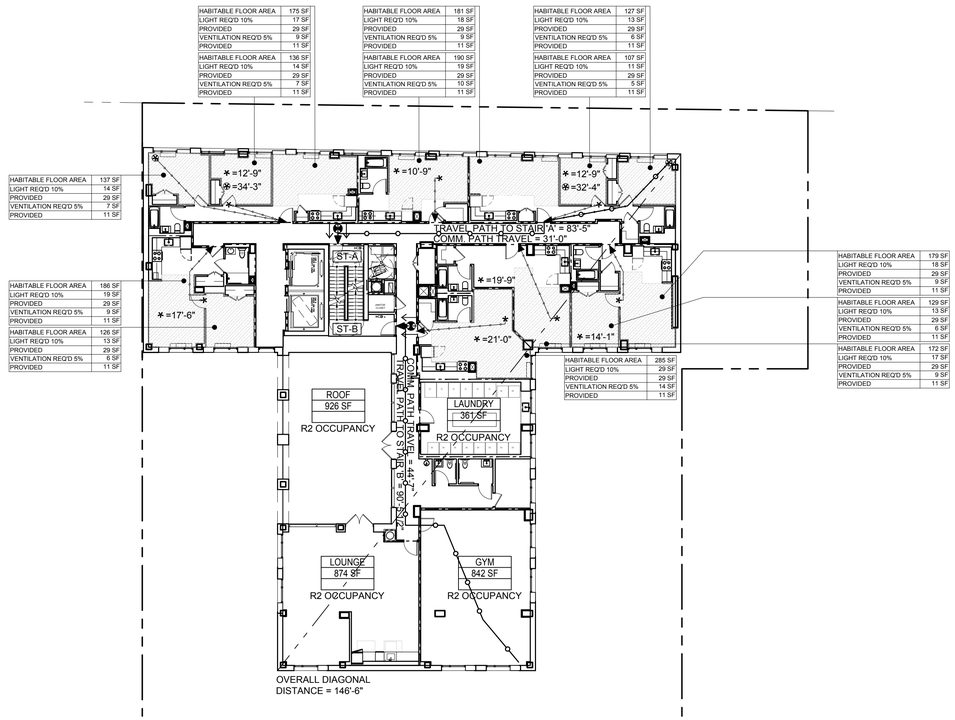

1 14TH FLOOR LIFE SAFETY PLAN
SCALE: 1/16"=1'-0"

EGRESS CALCULATIONS	SF*	SF/OCCUPANT	OCCUPANT LOAD	NYC IBC 2014
DWELLING UNIT AREA	3,949	200	20	TABLE 1004.1.1
LAUNDRY	361	100	4	
GYM	842	50	17	
LOUNGE	874	15	59	
ROOF TERRACE	926	200	5	
TOTAL	6,952		105	

EGRESS STAIRS	STAIR WIDTH (IN)	STAIR CAPACITY (÷ 0.3)	NYC IBC 2014
STAIR A	44	147	TABLE 1005.1
STAIR B	44	147	
TOTAL		293	293 > 105 COMPLIES
EGRESS DOORS	**DOOR WIDTH (IN)**	**DOOR CAPACITY (÷ 0.2)**	**NYC IBC 2014**
EXIT DOOR STAIR A	38	190	TABLE 1005.1
EXIT DOOR STAIR B	38	190	TABLE 1005.1
TOTAL		380	860 > 105 COMPLIES

STAIR REMOTENESS	NYC IBC 2014
DIAGONAL DISTANCE = 146'-6"	
DISTANCE BETWEEN STAIRS 'A' & 'B' : 40'-0" < 1/3(146'-6") DOES NOT COMPLY	

EXIT ACCESS TRAVEL DISTANCE *TABLE 1016 BC 2014*	REQUIRED DIST.	MAX. PROPOSED DIST.	
COMMON PATH OF TRAVEL	125'-0" (MAXIMUM)	44'-7"	CONFORMS
MAX. TRAVEL DISTANCE ALLOWED	200'-0" (MAXIMUM)	90'-5"	CONFORMS

UNIT COUNT							
STUDIO	1 BED	2 BED	STUDIO UFAS	1 BED UFAS	2 BED UFAS	3 BED UFAS	TOTAL
3	1	2	0	1	0	0	7

NATURAL VENTILATION *MINIMUM OPENINGS 1203.4.1.4.1 BC 2014*	
MIN. OPENINGS MINIMUM 5% OF THE FLOOR AREA THAT NEEDS VENTILATION	CONFORMS
NATURAL VENTILATION *MINIMUM OPENINGS 1203.4.1.4.1 BC 2014*	
MIN. OPENINGS MINIMUM 10% OF THE FLOOR AREA OF ROOM BEING SERVED	CONFORMS

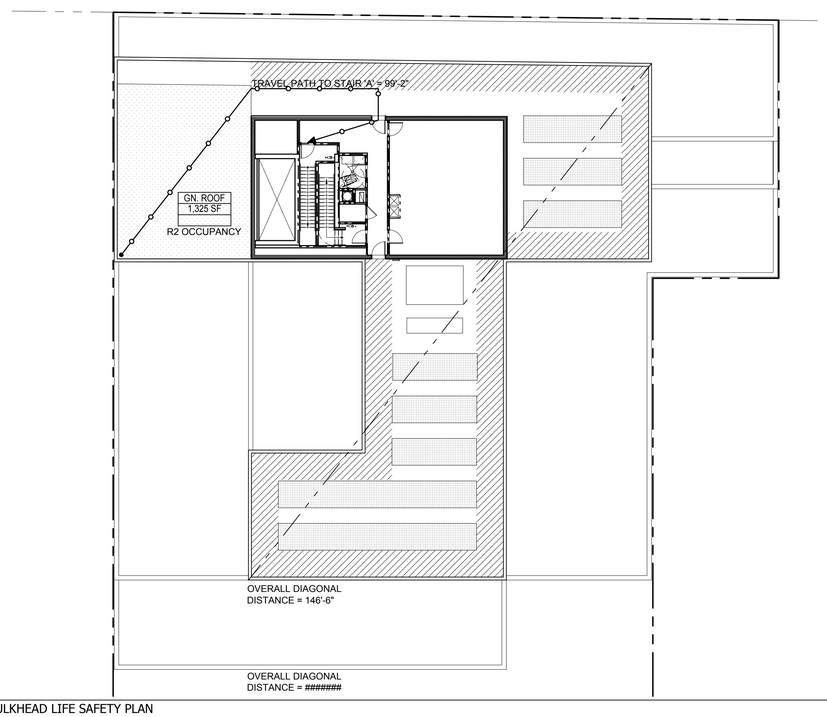

2 BULKHEAD LIFE SAFETY PLAN
SCALE: 1/16"=1'-0"

EGRESS CALCULATIONS	SF*	SF/OCCUPANT	OCCUPANT LOAD	NYC IBC 2014
GREEN ROOF	1,325	200	7	TABLE 1004.1.1
MECHANICAL BOILER	765	300	3	
TOTAL	2,090		10	

EGRESS STAIRS	STAIR WIDTH (IN)	STAIR CAPACITY (÷ 0.3)	NYC IBC 2014
STAIR A	44	147	TABLE 1005.1
STAIR B	44	147	
TOTAL		293	293 > 10 COMPLIES
EGRESS DOORS	**DOOR WIDTH (IN)**	**DOOR CAPACITY (÷ 0.2)**	**NYC IBC 2014**
EXIT DOOR STAIR A	38	190	TABLE 1005.1
EXIT DOOR STAIR B	38	190	TABLE 1005.1
TOTAL		380	860 > 10 COMPLIES

STAIR REMOTENESS	NYC IBC 2014
DIAGONAL DISTANCE = 146'-6"	
DISTANCE BETWEEN STAIRS 'A' & 'B' : 40'-0" < 1/3(146'-6") DOES NOT COMPLY	

EXIT ACCESS TRAVEL DISTANCE *TABLE 1016 BC 2014*	REQUIRED DIST.	MAX. PROPOSED DIST.	
COMMON PATH OF TRAVEL	125'-0" (MAXIMUM)	-	CONFORMS
MAX. TRAVEL DISTANCE ALLOWED	200'-0" (MAXIMUM)	99'-2"	CONFORMS

LEGEND:

- 1 HR RATED SEPARATION
- 2 HR RATED SEPARATION
- 3HR RATED SEPARATION
- NON RATED PARTITION
- HABITABLE SPACE
- LANDSCAPING LIMITED TO GRASS THAT IS UNDER 12"
- ASSEMBLY W/O FIXED SEATS - UNCONCENTRATED
- GENERAL TRAVEL DISTANCE
- TRAVEL DISTANCE WITHIN DWELLING UNIT
- (A) 3/4 HR FIRE PROOF SELF CLOSING
- (B) 1 1/2 HR FIRE PROOF SELF CLOSING
- (C) 3 HR FIRE PROOF SELF CLOSING
- (SD) SMOKE AND CO DETECTOR
- DIRECTIONAL EXIT SIGNS

GENERAL NOTES:

1. THE BUILDING IS FULLY SPRINKLERED PER NFPA 13

2. AS PER CODE SECTION 508.3.3 THE REQUIRED AND PROVIDED FIRE SEPARATION BETWEEN CERTAIN AREAS ARE AS FOLLOWS:
- BTW RESIDENTIAL UNITS: 1HR
- BTW RESIDENTIAL UNIT & CORRIDOR: 2HR
- COMPACTOR ROOM: 3HR

3. BUILDINGS BULLETIN 2017-DRAFT TO BE REFERENCED FOR 200 SF/ OCCUPANT IN LIEU OF 15 SF/ OCCUPANT AT OUTDOOR AREAS.

4. NOTE THAT LANDSCAPING AT THE 2ND FLOOR TERRACE IS NOT DEDUCTED FROM THE SF SHOWN, ALTHOUGH THE DRAFT BULLETIN STATES THIS DEDUCTION MAY BE USED.

5. REFERENCE BC 1004.2 IN ADDITION TO THE BUILDINGS BULLETIN 2017-DRAFT FOR 5TH FLOOR OUTDOOR AREA.

6. PLUMBING FIXTURES TO BE PROVIDED BY TENANT FIT-OUT.

Client:
RANGER PROPERTIES
4790 BROADWAY
NEW YORK, NY 10034

Architect:
FOGARTY FINGER architecture | interiors
69 Walker St, New York, NY 10013
t 212 966 7450 f 212 966 7444

Structural:
Thornton Tomasetti
51 Madison Avenue
New York, NY 10010
Tel 917.661.7800

MEP / FP:
Concessi Engineering, PC
499 7th Avenue, 11th Floor South Tower
New York, NY 10018
Tel 212.629.6810

GEOTECH:
FNA Engineering Services, PC
670 Bergen Boulevard, Floor 2
Ridgefield, NJ 07657
Tel 201.241.2444

FACADE:
Simpson Gumpertz & Heger
550 7th Avenue, 10th Floor
New York, NY 10018
Tel 212.271.7000

CODE:
Metropolis
22 Courtland Street, 10th Floor
New York, NY 10007
Tel 212.233.6344

No.	Date	Issue
02	02.06.2019	DD ESTIMATING
01	11.20.2018	SCHEMATIC DESIGN

Project:
4790 BROADWAY
NEW YORK, NY 10034

Drawing Title:
14TH & BULKHEAD FLOOR LIFE SAFETY PLAN

Seal & Signature:

DATE (MM-DD-YY): 02-05-2019
PROJECT No.:
DRAWING BY: --
CHK BY: --
DWG. No.: A-004.00
CADD FILE No.:

JOB NO. M 2233-13-SD
SURVEYED ON: SEPTEMBER 27, 2018
PAGE 1

FLOOD NOTE

BY GRAPHIC PLOTTING ONLY, SUBJECT PROPERTY IS LOCATED IN **ZONE X (AREA OF NO FLOODING)** AS SHOWN ON THE FLOOD INSURANCE RATE MAP FOR COMMUNITY PANEL NUMBER **360 497 0001 F** WHICH BEARS AN EFFECTIVE DATE OF SEPTEMBER 5, 2007 AND REVISED DECEMBER 5, 2013.

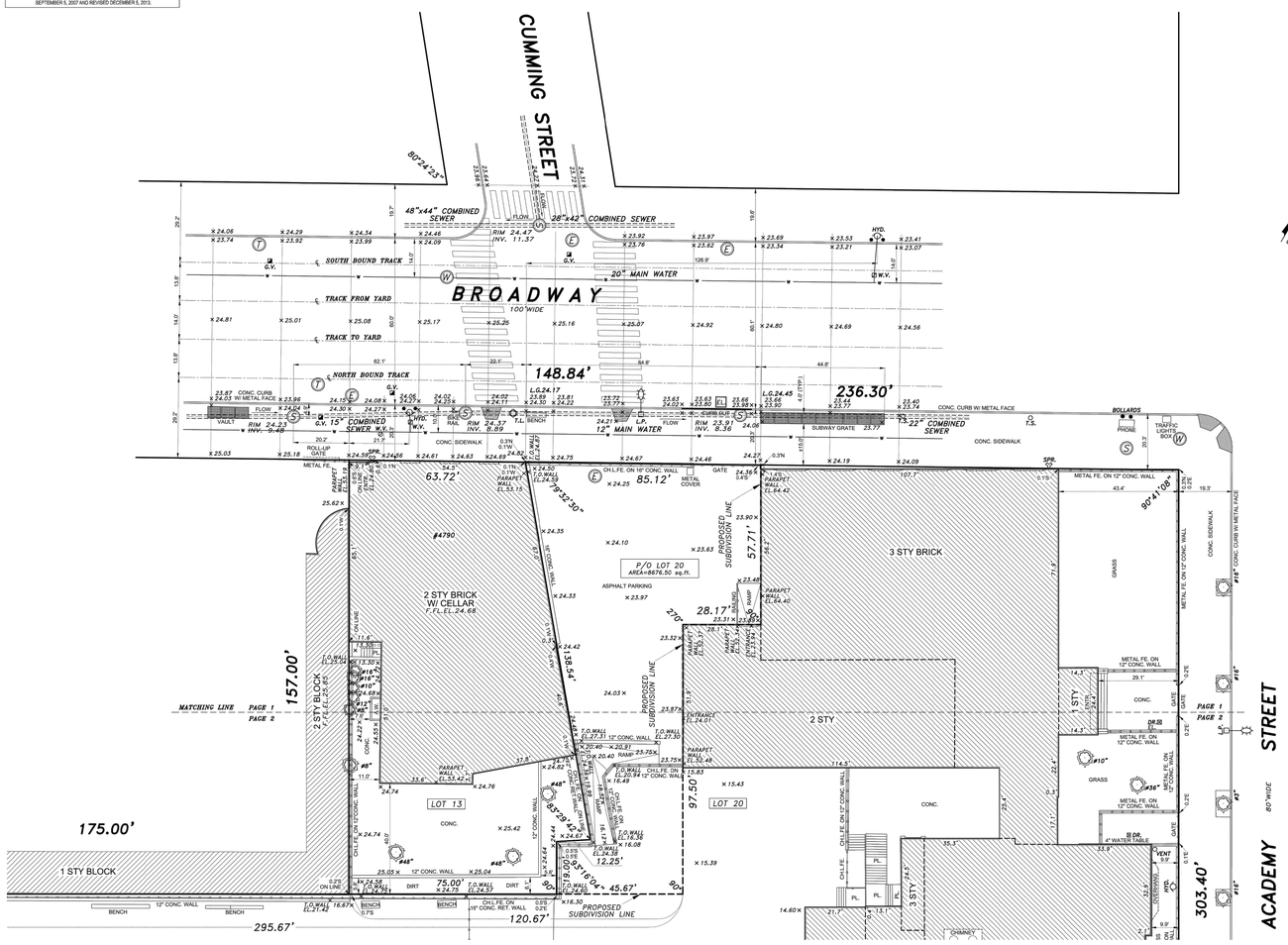

LOT 13 AREA = 11813.46 sq.ft. = 0.2712 acre
LOT 20 AREA = 105998.53 sq.ft. = 2.4334 acre

GRAPHIC SCALE

ALL WRITTEN MEASUREMENTS AND OFFSETS NOTED ON THIS SURVEY SUPERSEDE MEASUREMENTS SCALED OF THIS PLOT.

SCALE 1:20

0 5 10 15 20 25 30 35 40 45 50 100

SYMBOLS AND ABBREVIATIONS

FENCE	CHL.FE. / WOOD FE.
UTILITY POLE	U.P.
PARKING METER	P.M.
OIL FILL	O.F.
MONITORING WELL	M.W.
TRAFFIC LIGHT	T.L.
LIGHT	
STREET LIGHT	L.P.
FIRE HYDRANT	HYD.
SIAMESE CONNECTION	SPR.
SHUT OFF VALVE	G.V. / G.V. / W.V. / W.V.
HANDICAPPED PARKING	
EXISTING TREE	#12"
DRAINS	DR. / DR.
ROOF OVER	R.O.
EXISTING ELEVATIONS	+45.15 TOP OF CURB; +42.85 BOTTOM OF CURB; +45.78
CITY ESTABLISHED GRADES	L.G.7.52
CURB AND CURB CUT	CURB CUT
OVERHEAD SERVICE	OH S.W.
CABLE TV MANHOLE	CTV
MANHOLES	M E T W S; RIM EL. INV.EL.
CATCH BASIN	C.B.
FIRE ESCAPE	F.E.
PLATFORM	PL. or PLTF.
BASEMENT ENTRANCE	B.E.
CELLAR ENTRANCE	C.E.
AIR WAY	A.W.
BAY WINDOW	B.W.
CONCRETE	CONC.
OVERHANG	O.H.
AIR CONDITION	AC
METAL	MET.
NORTH OF PROPERTY LINE	N
SOUTH OF PROPERTY LINE	S
EAST OF PROPERTY LINE	E
WEST OF PROPERTY LINE	W

GENERAL NOTES

SUBSURFACE UTILITIES ARE NOT GUARANTEED BY SURVEYOR. HIGH CAUTION RECOMMENDED AND VERIFICATION WITH PROPER CITY AGENCIES, IS MANDATORY BEFORE COMMENCING ALL NEW WORK.

ALL SUBSURFACE AND OVERHEAD UTILITIES (AS TO SIZE, TYPE AND DEPTH) SHOWN ON THIS SURVEY ARE TAKEN FROM RECORDS OF GOVERNMENTAL AGENCIES AND UTILITY COMPANIES, UNLESS OTHERWISE NOTED AND SHOWN.

COVER OR DEPTH OF UTILITIES WHICH DERIVED FROM FIELD MEASUREMENTS SHOWN ON THIS SURVEY SHOULD BE VERIFIED WITH PROPER AGENCY PRIOR TO CONSTRUCTION OF PROJECT. INVERT ELEVATIONS ARE DERIVED FROM CITY AGENCY RECORDS WHEN NOT AVAILABLE BY FIELD SURVEY AND NOTED AS PER RECORDS ON THIS SURVEY.

ALL SUBSURFACE UTILITY AS TO LOCATION AND DEPTH, SHOULD BE RECHECKED AND LEGAL GRADES SHOULD BE OBTAINED WITH THE TOPOGRAPHICAL BUREAU PREFERABLY IN WRITING BEFORE COMMENCING CONSTRUCTION.

THIS IS TO CERTIFY THAT THERE ARE NO STREAMS OR NATURAL WATER COURSES ON THE SURVEYED PROPERTY EXCEPT AS SHOWN AND/OR DESCRIBED ON THIS SURVEY.

ALL OPERATIONS OF UNDERGROUND FACILITIES AND ALL EXCAVATORS ARE OBLIGATED TO COMPLY WITH ARTICLE 36 OF THE GENERAL BUSINESS LAW AND WITH PROVISIONS OF INDUSTRIAL CODE PART (RULE NO.35) BEFORE ANY EXCAVATION OR DEMOLITION IS COMMENCED. EVERY EXCAVATOR IS REQUIRED BY THESE LAWS TO GIVE ADVANCE NOTICE TO EVERY OPERATOR OF UNDERGROUND FACILITIES OF HIS INTENT TO PERFORM EXCAVATION OR DEMOLITION WORK IN THE SPECIFIED AREA

ALL ELEVATIONS SHOWN REFER TO THE NAVD 1988 DATUM. TO OBTAIN:
- NGVD 1929 DATUM - ADD 1.546 REFER
- MANHATTAN BOROUGH DATUM - SUBTRACT 1.652 FEET

EASEMENTS IF ANY ARE NOT SHOWN ON THIS SURVEY. NO INFORMATION PROVIDED TO SURVEYOR AT THIS TIME.

UNDERGROUND UTILITIES NOTES

UNDERGROUND, OVERHEAD AND GROUND LEVEL UTILITIES ARE NOT GUARANTEED AS TO ACCURACY, EXACT LOCATION, TYPE OR USE, ACTIVE OR INACTIVE. VERIFICATION IS MANDATORY WITH MUNICIPAL AGENCIES, PUBLIC AND PRIVATE UTILITY COMPANIES PRIOR TO TAKING TITLE AND OR DESIGN WORK. BOUNDARIES ARE NOT GUARANTEED UNLESS SO NOTED.

ALL OPERATIONS OF UNDERGROUND FACILITIES AND ALL EXCAVATORS ARE OBLIGATED TO COMPLY WITH ARTICLE 36 OF THE GENERAL BUSINESS LAW AND WITH PROVISIONS OF INDUSTRIAL CODE PART (RULE NO. 35) BEFORE ANY EXCAVATION OR DEMOLITION IS COMMENCED. EVERY EXCAVATOR IS REQUIRED BY THESE LAWS TO GIVE ADVANCE NOTICE TO EVERY OPERATOR OF UNDERGROUND FACILITIES OF HIS INTENT TO PERFORM EXCAVATION OR DEMOLITION WORK IN THE SPECIFIED AREA

UNAUTHORIZED ALTERATION OR ADDITION TO THIS SURVEY IS A VIOLATION OF SECTION 7209 OF **THE NEW YORK STATE EDUCATION LAW.** COPIES OF THIS SURVEY MAP NOT BEARING THE LAND SURVEYOR'S INKED SEAL OR EMBOSSED SEAL SHALL NOT BE CONSIDERED TO BE A VALID COPY. GUARANTEES OR CERTIFICATIONS INDICATED HEREON SHALL RUN ONLY TO THE PERSON FOR WHOM THE SURVEY IS PREPARED AND ON HIS BEHALF TO THE TITLE COMPANY, GOVERNMENTAL AGENCY AND LENDING INSTITUTION LISTED HEREON, AND TO THE ASSIGNEES OF THE LENDING INSTITUTION. GUARANTEES OR CERTIFICATIONS ARE NOT TRANSFERABLE TO ADDITIONAL INSTITUTIONS OR SUBSEQUENT OWNERS.

GUARANTEED TO:

COUNTY: NEW YORK CITY: MANHATTAN
SECTION: BLOCK: 2233 LOT(S): 13, 20
PROPERTY ADDRESS: 4790 BROADWAY

SUBDIVISION SURVEY

PREPARED BY
PERFECT POINT
LAND SURVEYING RT
brooklyn - queens - manhattan - bronx
staten island - nassau
phone: (718) 474-7700
fax: (718) 872-9699
info@ppsurveying.com
www.ppsurveying.com

N.Y.S. L.L.S. 049844

1 SURVEY
SCALE: N.T.S.

Client:
RANGER PROPERTIES
4790 BROADWAY
NEW YORK, NY 10034

Architect:
FOGARTY FINGER
architecture | interiors
69 Walker St, New York, NY 10013
t 212 966 7450 f 212 966 7444

Structural:
Thornton Tomasetti
51 Madison Avenue
New York, NY 10010
Tel 917.661.7800

MEP / FP:
Concessi Engineering, PC
499 7th Avenue, 11th Floor South Tower
New York, NY 10018
Tel 212.629.6810

GEOTECH:
FNA Engineering Services, PC
670 Bergen Boulevard, Floor 2
Ridgefield, NJ 07657
Tel 201.241.2444

FACADE:
Simpson Gumpertz & Heger
550 7th Avenue, 10th Floor
New York, NY 10018
Tel 212.271.7000

CODE:
Metropolis
22 Courtland Street, 10th Floor
New York, NY 10007
Tel 212.233.6344

No.	Date	Issue
02	02.06.2019	DD ESTIMATING
01	11.20.2018	SCHEMATIC DESIGN

Project:
4790 BROADWAY
NEW YORK, NY 10034

Drawing Title:
SURVEY

Seal & Signature:

DATE (MM-DD-YY): 02-05-2019
PROJECT No.:
DRAWING BY: –
CHK BY: –
DWG. No.: A-010.00
CADD FILE No.:

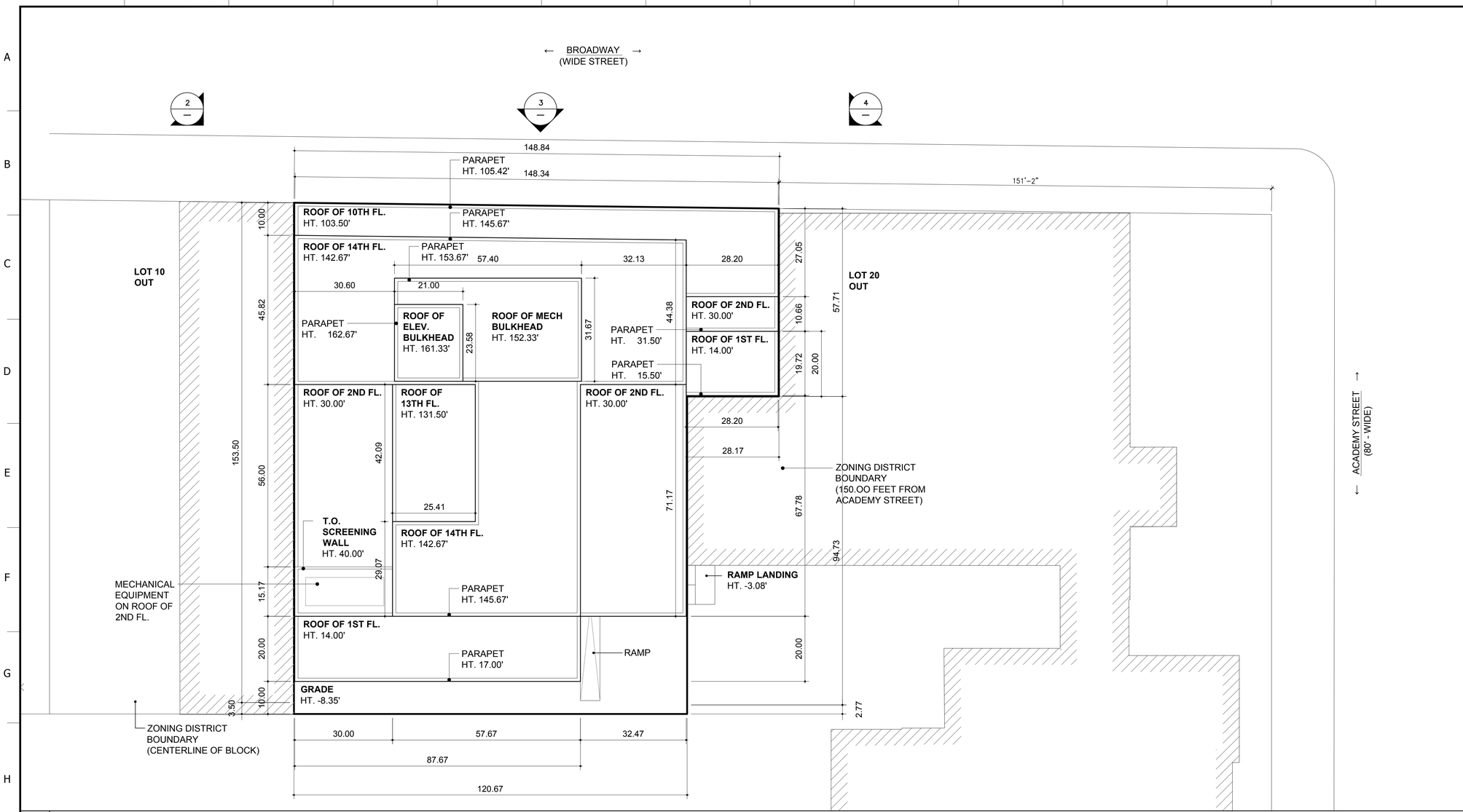

1 SITE PLAN
SCALE: 1/16"=1'-0"

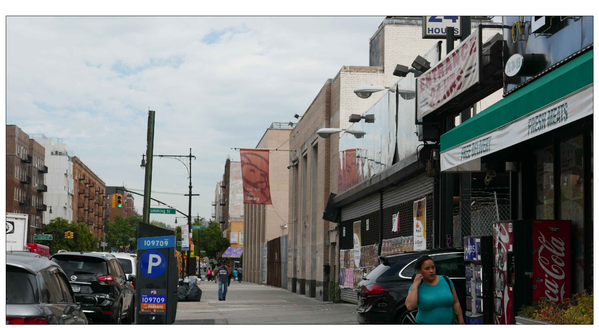

2 STREET VIEW
SCALE: 1/16"=1'-0"

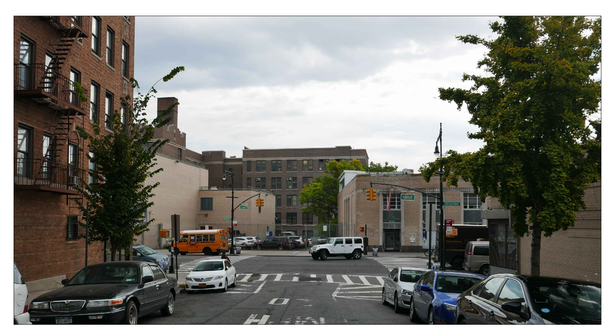

3 STREET VIEW
SCALE: 1/16"=1'-0"

4 STREET VIEW
SCALE: 1/16"=1'-0"

Client:

RANGER PROPERTIES
4790 BROADWAY
NEW YORK, NY 10034

Architect:

FOGARTY FINGER
architecture | interiors

69 Walker St, New York, NY 10013
t 212 966 7450 f 212 966 7444

Structural:

Thornton Tomasetti
51 Madison Avenue
New York, NY 10010
Tel 917.661.7800

MEP / FP:

Concessi Engineering, PC
499 7th Avenue, 11th Floor South Tower
New York, NY 10018
Tel 212.629.6810

GEOTECH:

FNA Engineering Services, PC
670 Bergen Boulevard, Floor 2
Ridgefield, NJ 07657
Tel 201.241.2444

FACADE:

Simpson Gumpertz & Heger
550 7th Avenue, 10th Floor
New York, NY 10018
Tel 212.271.7000

CODE:

Metropolis
22 Courtland Street, 10th Floor
New York, NY 10007
Tel 212.233.6344

No.	Date	Issue
02	02.06.2019	DD ESTIMATING
01	11.20.2018	SCHEMATIC DESIGN

Project:

4790 BROADWAY
NEW YORK, NY 10034

Drawing Title:

SITE PLAN

Seal & Signature:

DATE (MM-DD-YY): 02-05-2019
PROJECT No.:
DRAWING BY: --
CHK BY: --
DWG. No.: A-011.00
CADD FILE No.:

1 RENDERINGS
SCALE: N.T.S.

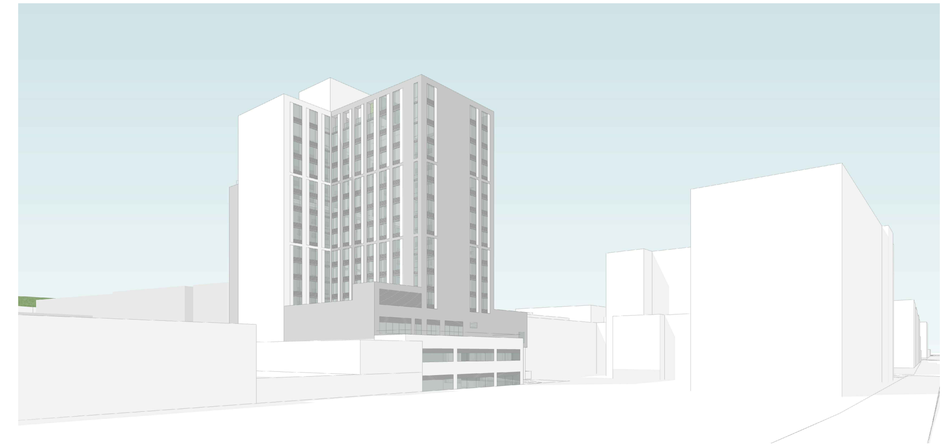

2 RENDERINGS
SCALE: N.T.S.

3 RENDERINGS
SCALE: N.T.S.

4 RENDERINGS
SCALE: N.T.S.

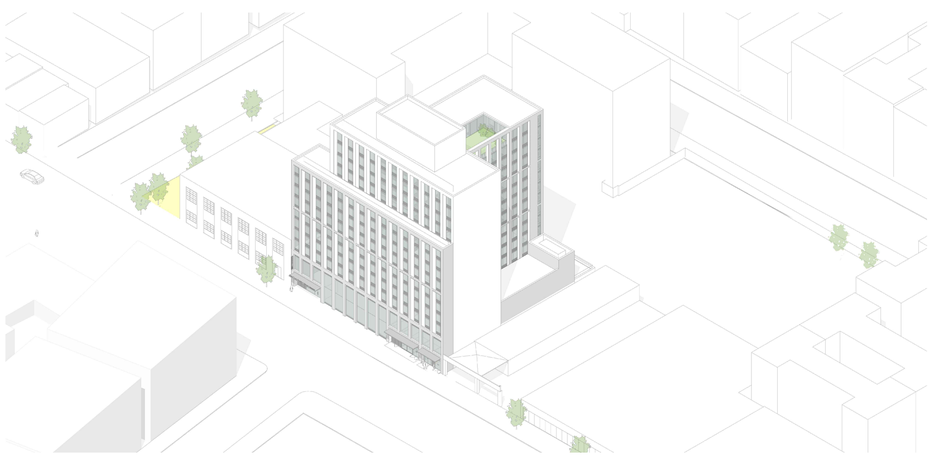

5 RENDERINGS
SCALE: N.T.S.

6 RENDERINGS
SCALE: N.T.S.

Client:

RANGER PROPERTIES
4790 BROADWAY
NEW YORK, NY 10034

Architect:

FOGARTY FINGER
architecture | interiors

69 Walker St, New York, NY 10013
t 212 966 7450 f 212 966 7444

Structural:

Thornton Tomasetti
51 Madison Avenue
New York, NY 10010
Tel 917.661.7800

MEP / FP:

Concessi Engineering, PC
499 7th Avenue, 11th Floor South Tower
New York, NY 10018
Tel 212.629.6810

GEOTECH:

FNA Engineering Services, PC
670 Bergen Boulevard, Floor 2
Ridgefield, NJ 07657
Tel 201.241.2444

FACADE:

Simpson Gumpertz & Heger
550 7th Avenue, 10th Floor
New York, NY 10018
Tel 212.271.7000

CODE:

Metropolis
22 Courtland Street, 10th Floor
New York, NY 10007
Tel 212.233.6344

No.	Date	Issue
02	02.06.2019	DD ESTIMATING
01	11.20.2018	SCHEMATIC DESIGN

Project:

4790 BROADWAY
NEW YORK, NY 10034

Drawing Title:

RENDERINGS

Seal & Signature:

DATE (MM-DD-YY): 02-05-2019
PROJECT No.:
DRAWING BY: --
CHK BY: --
DWG No.: A-012.00
CADD FILE No.:

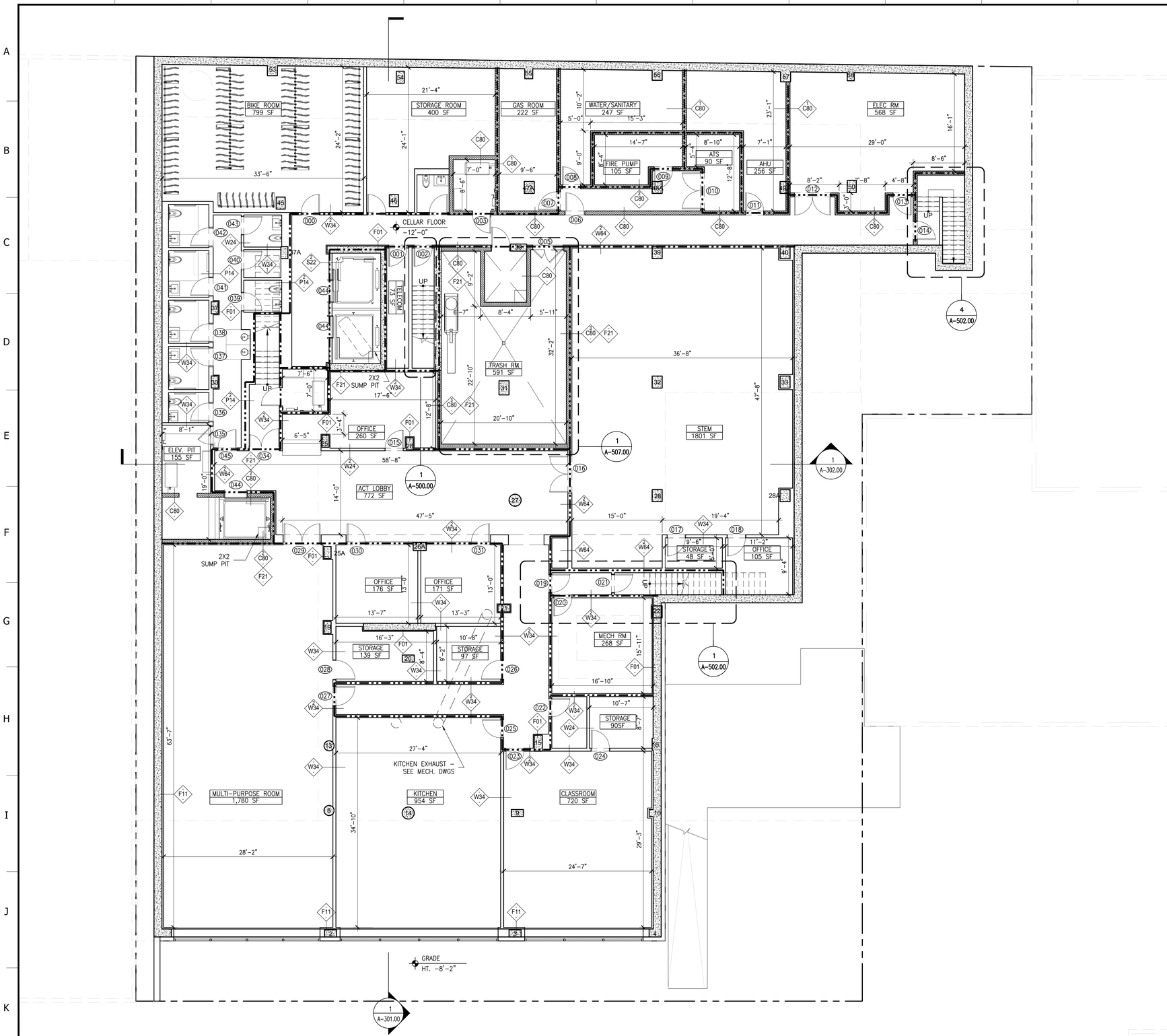

1 CELLAR FLOOR PLAN
SCALE: 1/8"=1'-0"

LEGEND:

- XX-01 FLOOR FINISH
- FINISH TRANSITION
- CMU WALL
- CONCRETE WALL
- NON-STRUCTURAL CONCRETE
- ELECTRICAL PANEL
- 1 HOUR FIRE RATED WALL
- 2 HOUR FIRE RATED WALL
- 3 HOUR FIRE RATED WALL
- CR CARD READER
- HOSE BIB

Client:

RANGER PROPERTIES
4790 BROADWAY
NEW YORK, NY 10034

Architect:

FOGARTY FINGER
architecture | interiors
69 Walker St, New York, NY 10013
t 212 966 7450 f 212 966 7444

Structural:

Thornton Tomasetti
51 Madison Avenue
New York, NY 10010
Tel 917.661.7800

MEP / FP:

Concessi Engineering, PC
499 7th Avenue, 11th Floor South Tower
New York, NY 10018
Tel 212.629.6810

GEOTECH:

FNA Engineering Services, PC
670 Bergen Boulevard, Floor 2
Ridgefield, NJ 07657
Tel 201.241.2444

FACADE:

Simpson Gumpertz & Heger
550 7th Avenue, 10th Floor
New York, NY 10018
Tel 212.271.7000

CODE:

Metropolis
22 Courtland Street, 10th Floor
New York, NY 10007
Tel 212.233.6344

No.	Date	Issue
02	02.06.2019	DD ESTIMATING
01	11.20.2018	SCHEMATIC DESIGN

Project:

4790 BROADWAY
NEW YORK, NY 10034

Drawing Title:

CELLAR FLOOR PLAN

Seal & Signature:

DATE (MM-DD-YY): 02-05-2019
PROJECT No.:
DRAWING BY: –
CHK BY: –
DWG. No.: A-100.00
CADD FILE No.:

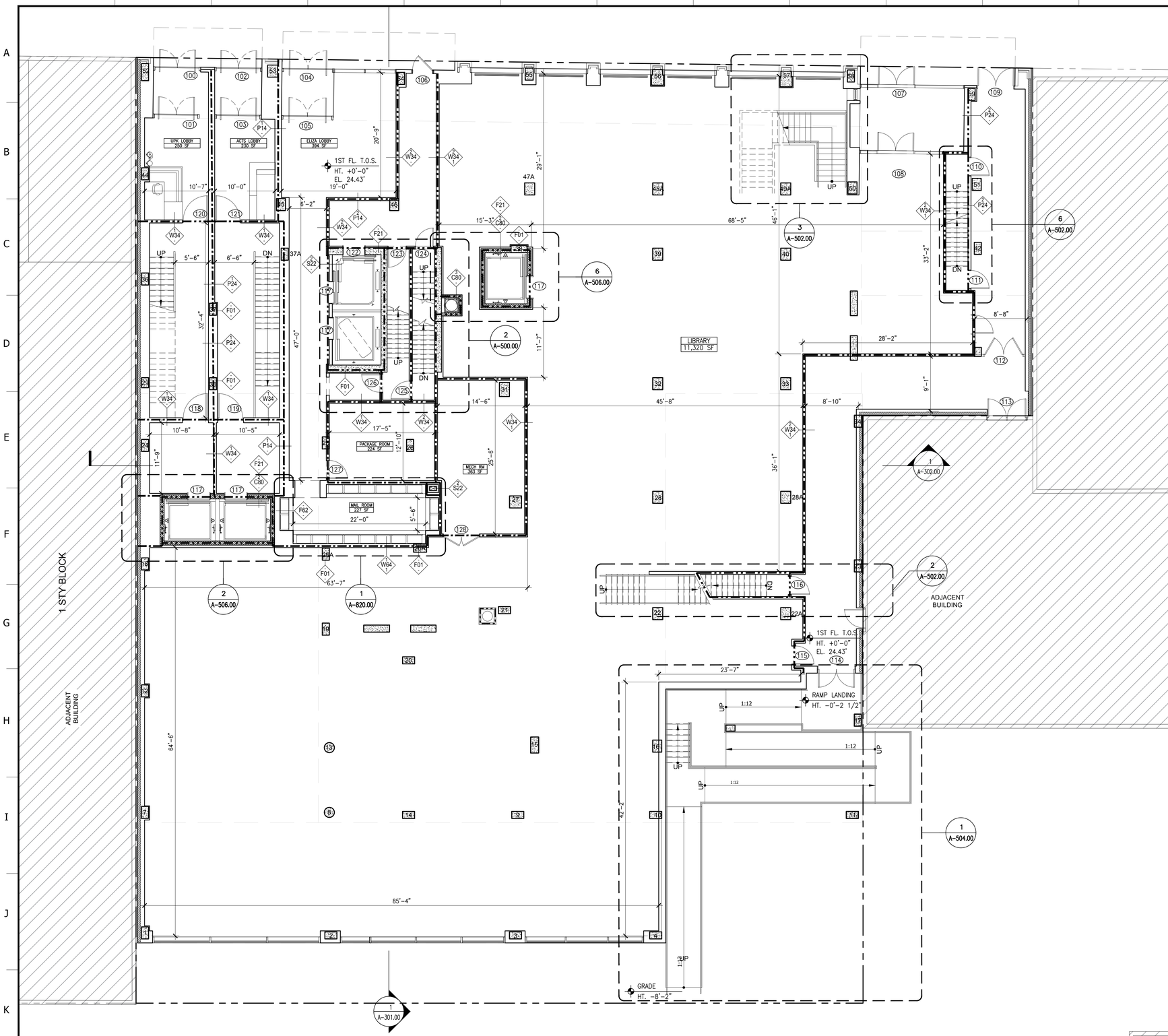

1 1ST FLOOR PLAN
SCALE: 1/8"=1'-0"

LEGEND:

- XX-01 FLOOR FINISH
- FINISH TRANSITION
- CMU WALL
- CONCRETE WALL
- NON-STRUCTURAL CONCRETE
- ELECTRICAL PANEL
- 1 HOUR FIRE RATED WALL
- 2 HOUR FIRE RATED WALL
- 3 HOUR FIRE RATED WALL
- CARD READER
- HOSE BIB

Client:

RANGER PROPERTIES
4790 BROADWAY
NEW YORK, NY 10034

Architect:

FOGARTY FINGER
architecture | interiors
69 Walker St, New York, NY 10013
t 212 966 7450 f 212 966 7444

Structural:

Thornton Tomasetti
51 Madison Avenue
New York, NY 10010
Tel 917.661.7800

MEP / FP:

Concessi Engineering, PC
499 7th Avenue, 11th Floor South Tower
New York, NY 10018
Tel 212.629.6810

GEOTECH:

FNA Engineering Services, PC
670 Bergen Boulevard, Floor 2
Ridgefield, NJ 07657
Tel 201.241.2444

FACADE:

Simpson Gumpertz & Heger
550 7th Avenue, 10th Floor
New York, NY 10018
Tel 212.271.7000

CODE:

Metropolis
22 Courtland Street, 10th Floor
New York, NY 10007
Tel 212.233.6344

No.	Date	Issue
02	02.06.2019	DD ESTIMATING
01	11.20.2018	SCHEMATIC DESIGN

Project:

4790 BROADWAY
NEW YORK, NY 10034

Drawing Title:

GROUND FLOOR PLAN

Seal & Signature:

DATE (MM-DD-YY): 02-05-2019
PROJECT No.:
DRAWING BY: ...
CHK BY: ...
DWG. No.: A-101.00
CADD FILE No.:

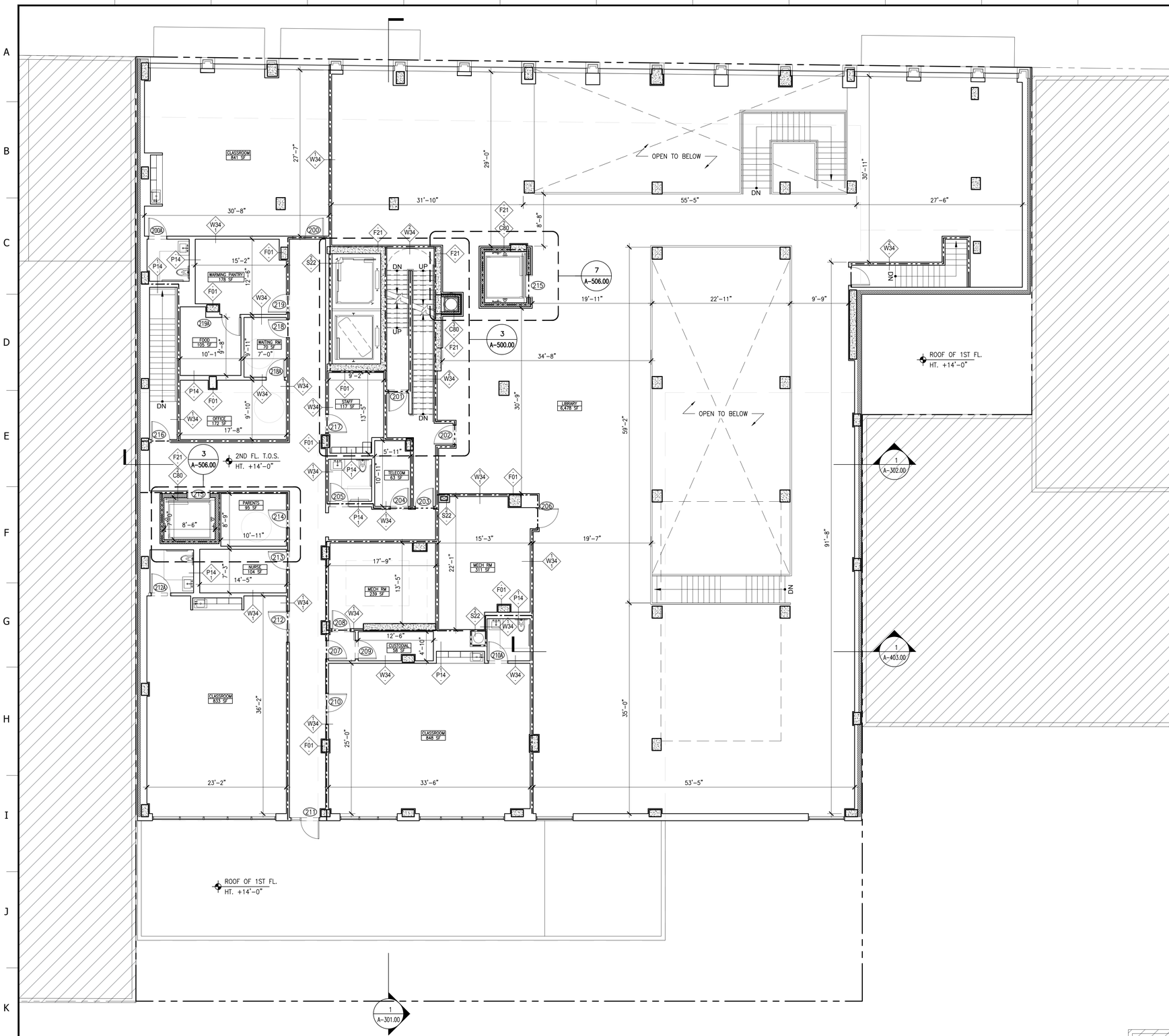

1 2ND FLOOR PLAN
SCALE: 1/8"=1'-0"

LEGEND:

- XX-01 FLOOR FINISH
- FINISH TRANSITION
- CMU WALL
- CONCRETE WALL
- NON-STRUCTURAL CONCRETE
- ELECTRICAL PANEL
- 1 HOUR FIRE RATED WALL
- 2 HOUR FIRE RATED WALL
- 3 HOUR FIRE RATED WALL
- CARD READER
- HOSE BIB

Client:

RANGER PROPERTIES
4790 BROADWAY
NEW YORK, NY 10034

Architect:

FOGARTY FINGER
architecture | interiors
69 Walker St, New York, NY 10013
t 212 966 7450 f 212 966 7444

Structural:

Thornton Tomasetti
51 Madison Avenue
New York, NY 10010
Tel 917.661.7800

MEP / FP:

Concessi Engineering, PC
499 7th Avenue, 11th Floor South Tower
New York, NY 10018
Tel 212.629.6810

GEOTECH:

FNA Engineering Services, PC
670 Bergen Boulevard, Floor 2
Ridgefield, NJ 07657
Tel 201.241.2444

FACADE:

Simpson Gumpertz & Heger
550 7th Avenue, 10th Floor
New York, NY 10018
Tel 212.271.7000

CODE:

Metropolis
22 Courtland Street, 10th Floor
New York, NY 10007
Tel 212.233.6344

No.	Date	Issue
02	02.06.2019	DD ESTIMATING
01	11.20.2018	SCHEMATIC DESIGN

Project:

4790 BROADWAY
NEW YORK, NY 10034

Drawing Title:

2ND FLOOR PLAN

Seal & Signature:

DATE (MM-DD-YY): 02-05-2019
PROJECT No.:
DRAWING BY: –
CHK BY: –
DWG. No.: A-102.00
CADD FILE No.:

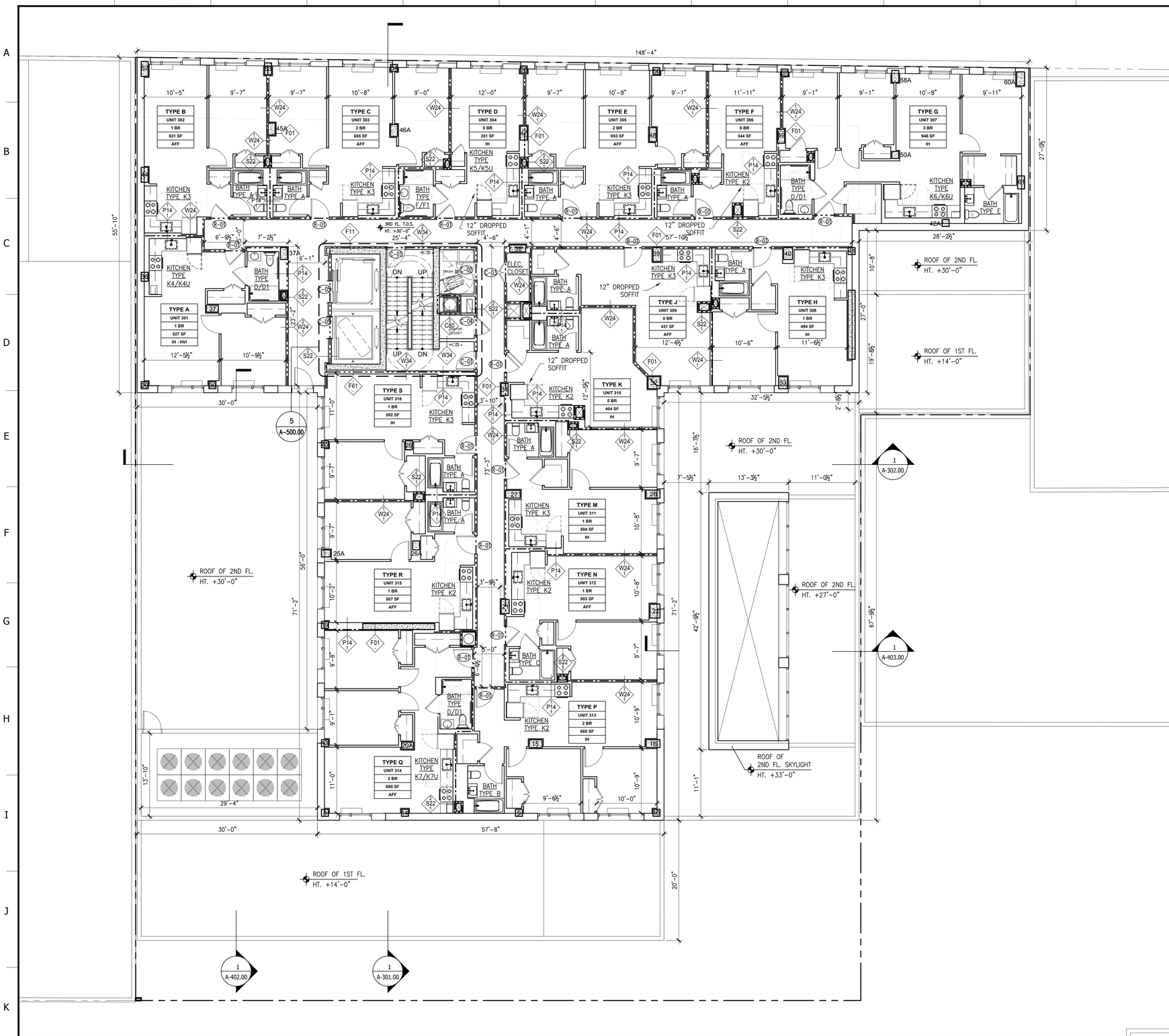

1 3RD FLOOR PLAN
SCALE: 1/8"=1'-0"

LEGEND:

- XX-01 FLOOR FINISH
- FINISH TRANSITION
- CMU WALL
- CONCRETE WALL
- NON-STRUCTURAL CONCRETE
- ELECTRICAL PANEL
- 1 HOUR FIRE RATED WALL
- 2 HOUR FIRE RATED WALL
- 3 HOUR FIRE RATED WALL
- CR CARD READER
- H HOSE BIB

Client:

RANGER PROPERTIES
4790 BROADWAY
NEW YORK, NY 10034

Architect:

FOGARTY FINGER
architecture | interiors
69 Walker St, New York, NY 10013
t 212 966 7450 f 212 966 7444

Structural:

Thornton Tomasetti
51 Madison Avenue
New York, NY 10010
Tel 917.661.7800

MEP / FP:

Concessi Engineering, PC
499 7th Avenue, 11th Floor South Tower
New York, NY 10018
Tel 212.629.6810

GEOTECH:

FNA Engineering Services, PC
670 Bergen Boulevard, Floor 2
Ridgefield, NJ 07657
Tel 201.241.2444

FACADE:

Simpson Gumpertz & Heger
550 7th Avenue, 10th Floor
New York, NY 10018
Tel 212.271.7000

CODE:

Metropolis
22 Courtland Street, 10th Floor
New York, NY 10007
Tel 212.233.6344

No.	Date	Issue
02	02.06.2019	DD ESTIMATING
01	11.20.2018	SCHEMATIC DESIGN

Project:

4790 BROADWAY
NEW YORK, NY 10034

Drawing Title:

3RD FLOOR PLAN

Seal & Signature:

DATE (MM-DD-YY): 02-05-2019
PROJECT No.:
DRAWING BY: ...
CHK BY: ...
DWG. No.: A-103.00
CADD FILE No.:

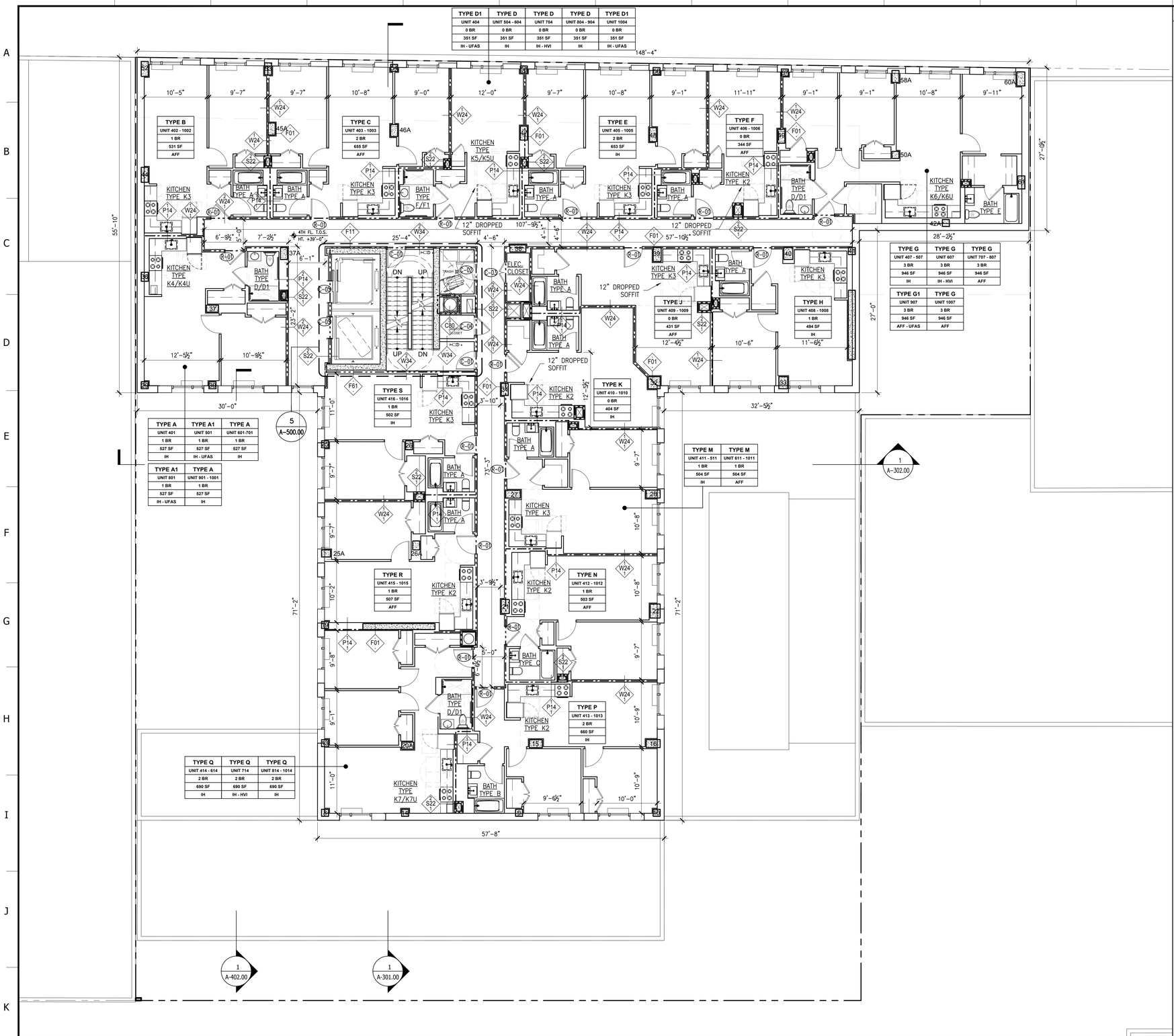

1 4TH - 10TH FLOOR PLAN

SCALE: 1/8"=1'-0"

LEGEND:

- XX-01 FLOOR FINISH
- FINISH TRANSITION
- CMU WALL
- CONCRETE WALL
- NON-STRUCTURAL CONCRETE
- ELECTRICAL PANEL
- 1 HOUR FIRE RATED WALL
- 2 HOUR FIRE RATED WALL
- 3 HOUR FIRE RATED WALL
- CR CARD READER
- HOSE BIB

Client:

RANGER PROPERTIES
4790 BROADWAY
NEW YORK, NY 10034

Architect:

FOGARTY FINGER
architecture | interiors
69 Walker St, New York, NY 10013
t 212 966 7450 f 212 966 7444

Structural:

Thornton Tomasetti
51 Madison Avenue
New York, NY 10010
Tel 917.661.7800

MEP / FP:

Concessi Engineering, PC
499 7th Avenue, 11th Floor South Tower
New York, NY 10018
Tel 212.629.6810

GEOTECH:

FNA Engineering Services, PC
670 Bergen Boulevard, Floor 2
Ridgefield, NJ 07657
Tel 201.241.2444

FACADE:

Simpson Gumpertz & Heger
550 7th Avenue, 10th Floor
New York, NY 10018
Tel 212.271.7000

CODE:

Metropolis
22 Courtland Street, 10th Floor
New York, NY 10007
Tel 212.233.6344

No.	Date	Issue
02	02.06.2019	DD ESTIMATING
01	11.20.2018	SCHEMATIC DESIGN

Project:

4790 BROADWAY
NEW YORK, NY 10034

Drawing Title:

4TH THRU 10TH FLOOR PLAN

Seal & Signature:

DATE (MM-DD-YY): 02-05-2019
PROJECT No.:
DRAWING BY: ...
CHK BY: ...
DWG. No.: A-104.00
CADD FILE No.:

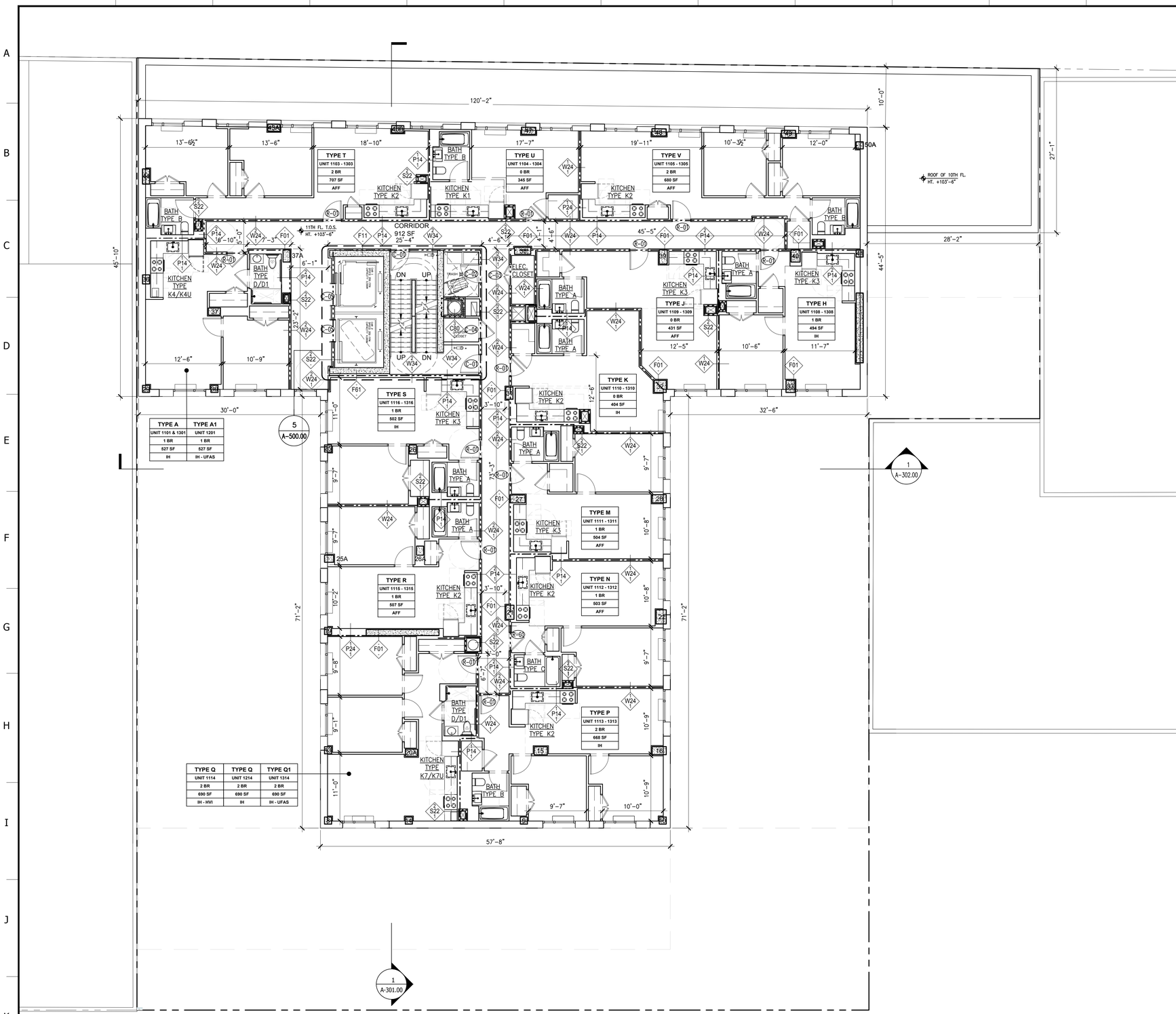

LEGEND:

- XX-01 FLOOR FINISH
- FINISH TRANSITION
- CMU WALL
- CONCRETE WALL
- NON-STRUCTURAL CONCRETE
- ELECTRICAL PANEL
- 1 HOUR FIRE RATED WALL
- 2 HOUR FIRE RATED WALL
- 3 HOUR FIRE RATED WALL
- CARD READER
- HOSE BIB

1 11TH - 13TH FLOOR PLAN
SCALE: 1/8"=1'-0"

Client:

RANGER PROPERTIES
4790 BROADWAY
NEW YORK, NY 10034

Architect:

FOGARTY FINGER
architecture | interiors
69 Walker St, New York, NY 10013
t 212 966 7450 f 212 966 7444

Structural:

Thornton Tomasetti
51 Madison Avenue
New York, NY 10010
Tel 917.661.7800

MEP / FP:

Concessi Engineering, PC
499 7th Avenue, 11th Floor South Tower
New York, NY 10018
Tel 212.629.6810

GEOTECH:

FNA Engineering Services, PC
670 Bergen Boulevard, Floor 2
Ridgefield, NJ 07657
Tel 201.241.2444

FACADE:

Simpson Gumpertz & Heger
550 7th Avenue, 10th Floor
New York, NY 10018
Tel 212.271.7000

CODE:

Metropolis
22 Courtland Street, 10th Floor
New York, NY 10007
Tel 212.233.6344

No.	Date	Issue
02	02.06.2019	DD ESTIMATING
01	11.20.2018	SCHEMATIC DESIGN

Project:

4790 BROADWAY
NEW YORK, NY 10034

Drawing Title:

11TH THRU 13TH
FLOOR PLAN

Seal & Signature:

DATE (MM-DD-YY): 02-05-2019
PROJECT No.:
DRAWING BY: --
CHK BY: --
DWG. No.: A-105.00
CADD FILE No.:

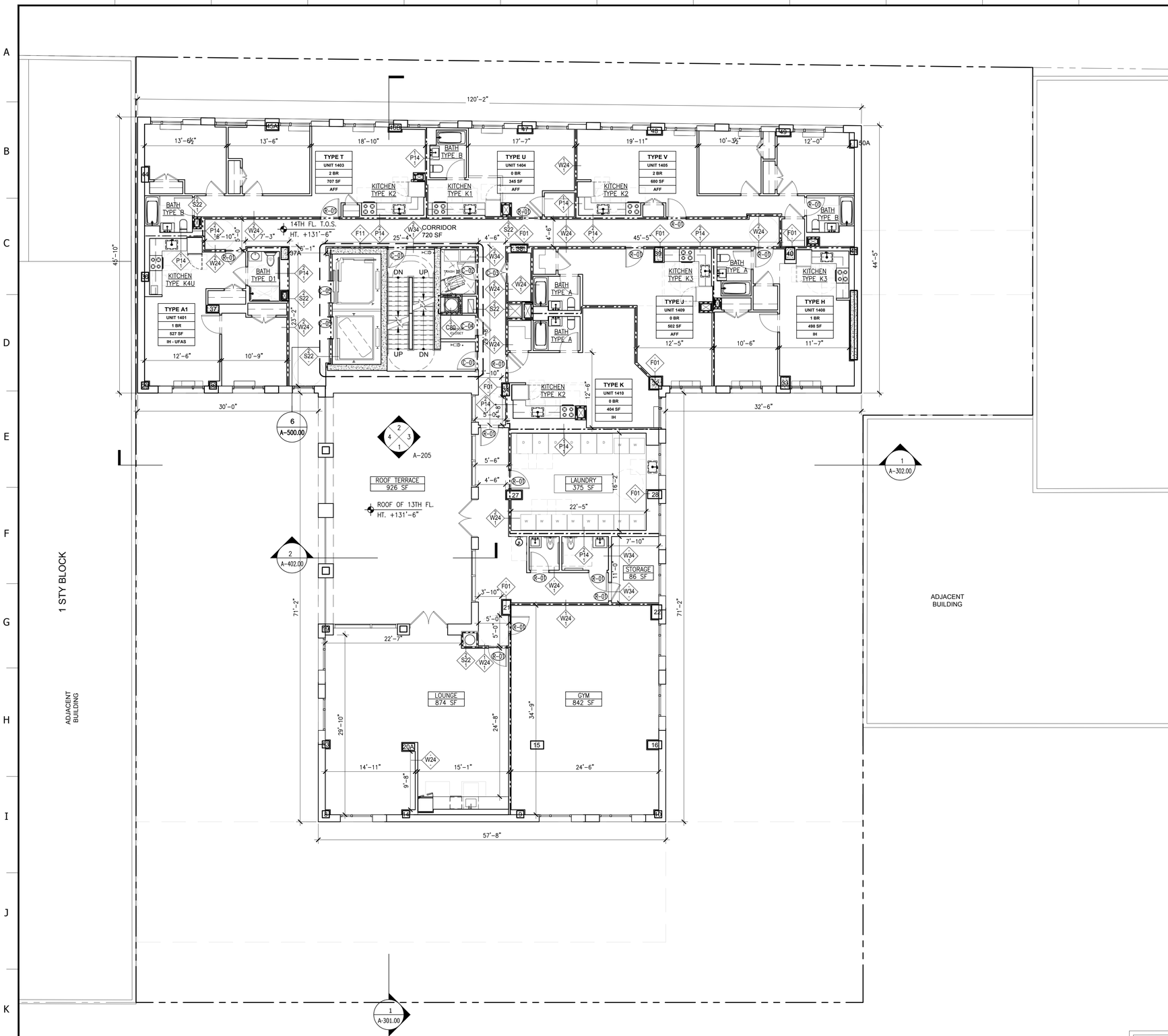

LEGEND:

- XX-01 FLOOR FINISH
- FINISH TRANSITION
- CMU WALL
- CONCRETE WALL
- NON-STRUCTURAL CONCRETE
- ELECTRICAL PANEL
- 1 HOUR FIRE RATED WALL
- 2 HOUR FIRE RATED WALL
- 3 HOUR FIRE RATED WALL
- CARD READER
- HOSE BIB

Client:

RANGER PROPERTIES
4790 BROADWAY
NEW YORK, NY 10034

Architect:

FOGARTY FINGER
architecture | interiors

69 Walker St, New York, NY 10013
t 212 966 7450 f 212 966 7444

Structural:

Thornton Tomasetti
51 Madison Avenue
New York, NY 10010
Tel 917.661.7800

MEP / FP:

Concessi Engineering, PC
499 7th Avenue, 11th Floor South Tower
New York, NY 10018
Tel 212.629.6810

GEOTECH:

FNA Engineering Services, PC
670 Bergen Boulevard, Floor 2
Ridgefield, NJ 07657
Tel 201.241.2444

FACADE:

Simpson Gumpertz & Heger
550 7th Avenue, 10th Floor
New York, NY 10018
Tel 212.271.7000

CODE:

Metropolis
22 Courtland Street, 10th Floor
New York, NY 10007
Tel 212.233.6344

No.	Date	Issue
02	02.06.2019	DD ESTIMATING
01	11.20.2018	SCHEMATIC DESIGN

Project:

4790 BROADWAY
NEW YORK, NY 10034

Drawing Title:

14TH FLOOR PLAN

Seal & Signature:

DATE (MM-DD-YY): 02-05-2019
PROJECT No.:
DRAWING BY: –
CHK BY: –
DWG. No.: A-106.00
CADD FILE No.:

1 14TH FLOOR PLAN
SCALE: 1/8"=1'-0"

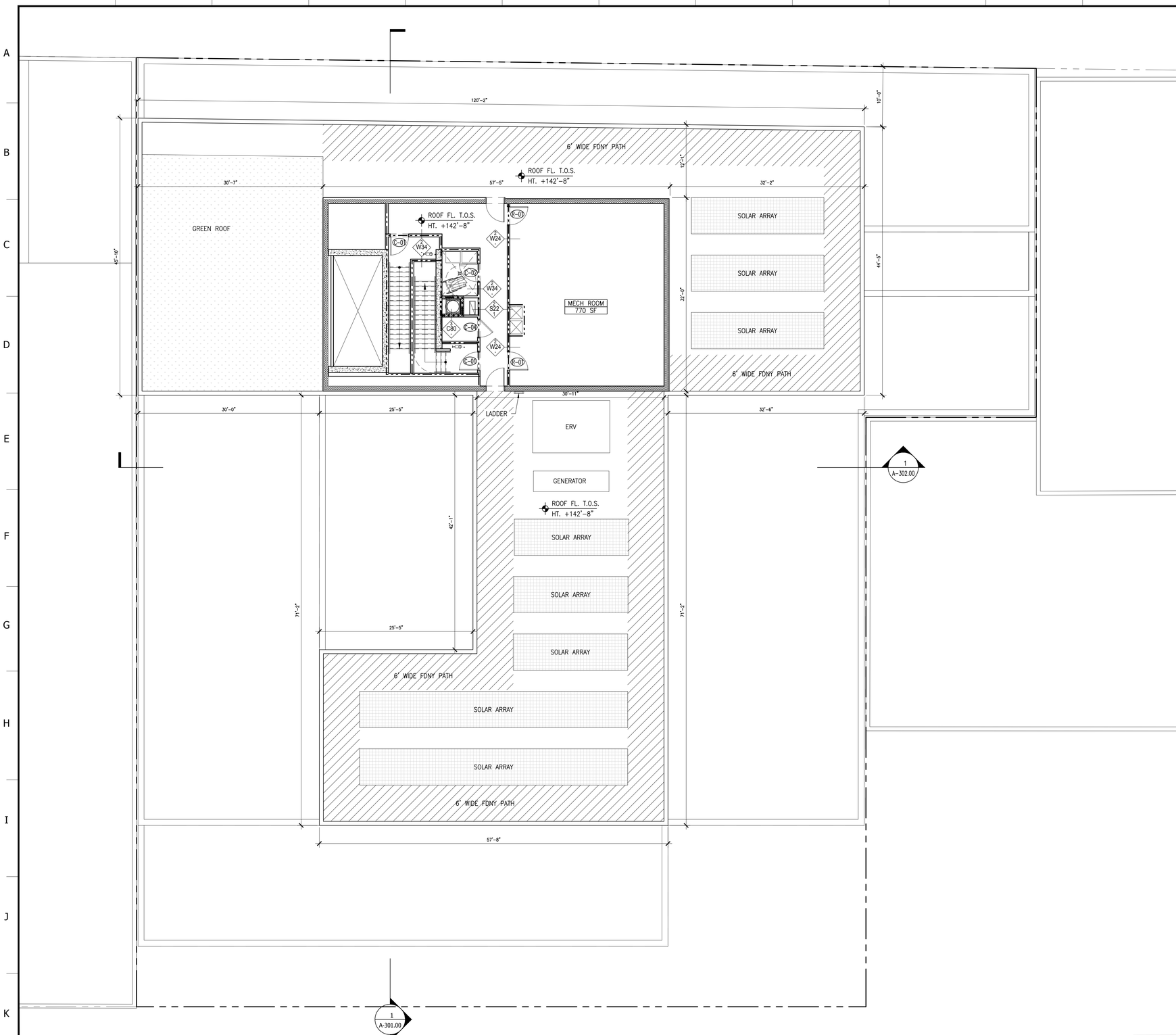

1 BULKHEAD PLAN

SCALE: 1/8"=1'-0"

LEGEND:

- XX-01 FLOOR FINISH
- FINISH TRANSITION
- CMU WALL
- CONCRETE WALL
- NON-STRUCTURAL CONCRETE
- ELECTRICAL PANEL
- 1 HOUR FIRE RATED WALL
- 2 HOUR FIRE RATED WALL
- 3 HOUR FIRE RATED WALL
- CR CARD READER
- HB HOSE BIB

Client:

RANGER PROPERTIES
4790 BROADWAY
NEW YORK, NY 10034

Architect:

FOGARTY FINGER
architecture | interiors

69 Walker St, New York, NY 10013
t 212 966 7450 f 212 966 7444

Structural:

Thornton Tomasetti
51 Madison Avenue
New York, NY 10010
Tel 917.661.7800

MEP / FP:

Concessi Engineering, PC
499 7th Avenue, 11th Floor South Tower
New York, NY 10018
Tel 212.629.6810

GEOTECH:

FNA Engineering Services, PC
670 Bergen Boulevard, Floor 2
Ridgefield, NJ 07657
Tel 201.241.2444

FACADE:

Simpson Gumpertz & Heger
550 7th Avenue, 10th Floor
New York, NY 10018
Tel 212.271.7000

CODE:

Metropolis
22 Courtland Street, 10th Floor
New York, NY 10007
Tel 212.233.6344

No.	Date	Issue
02	02.06.2019	DD ESTIMATING
01	11.20.2018	SCHEMATIC DESIGN

Project:

4790 BROADWAY
NEW YORK, NY 10034

Drawing Title:

ROOF PLAN

Seal & Signature:

DATE (MM-DD-YY): 02-05-2019
PROJECT No.:
DRAWING BY: --
CHK BY: --
DWG. No.: A-107.00
CADD FILE No.:

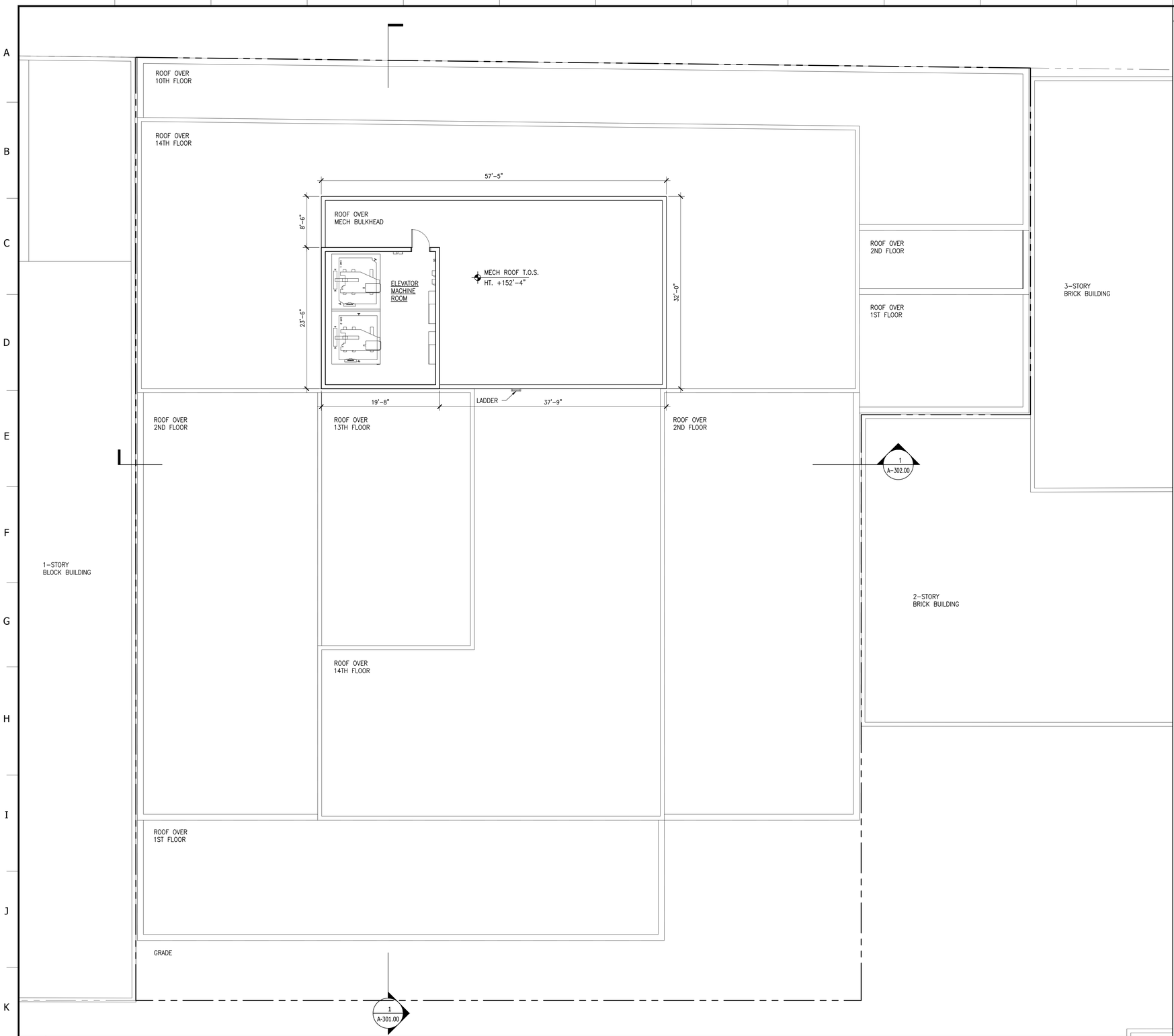

1 COMPOSITE ROOF PLAN
SCALE: 1/8"=1'-0"

LEGEND:

- XX-01 FLOOR FINISH
- FINISH TRANSITION
- CMU WALL
- CONCRETE WALL
- NON-STRUCTURAL CONCRETE
- ELECTRICAL PANEL
- 1 HOUR FIRE RATED WALL
- 2 HOUR FIRE RATED WALL
- 3 HOUR FIRE RATED WALL
- CR CARD READER
- HB HOSE BIB

Client:

RANGER PROPERTIES
4790 BROADWAY
NEW YORK, NY 10034

Architect:

FOGARTY FINGER
architecture | interiors
69 Walker St, New York, NY 10013
t 212 966 7450 f 212 966 7444

Structural:

Thornton Tomasetti
51 Madison Avenue
New York, NY 10010
Tel 917.661.7800

MEP / FP:

Concessi Engineering, PC
499 7th Avenue, 11th Floor South Tower
New York, NY 10018
Tel 212.629.6810

GEOTECH:

FNA Engineering Services, PC
670 Bergen Boulevard, Floor 2
Ridgefield, NJ 07657
Tel 201.241.2444

FACADE:

Simpson Gumpertz & Heger
550 7th Avenue, 10th Floor
New York, NY 10018
Tel 212.271.7000

CODE:

Metropolis
22 Courtland Street, 10th Floor
New York, NY 10007
Tel 212.233.6344

No.	Date	Issue
02	02.06.2019	DD ESTIMATING
01	11.20.2018	SCHEMATIC DESIGN

Project:

4790 BROADWAY
NEW YORK, NY 10034

Drawing Title:

ELEVATOR BULKHEAD
ROOF PART PLAN

Seal & Signature:

DATE (MM-DD-YY): 02-05-2019
PROJECT No.:
DRAWING BY: --
CHK BY: --
DWG. No.: A-108.00
CADD FILE No.:

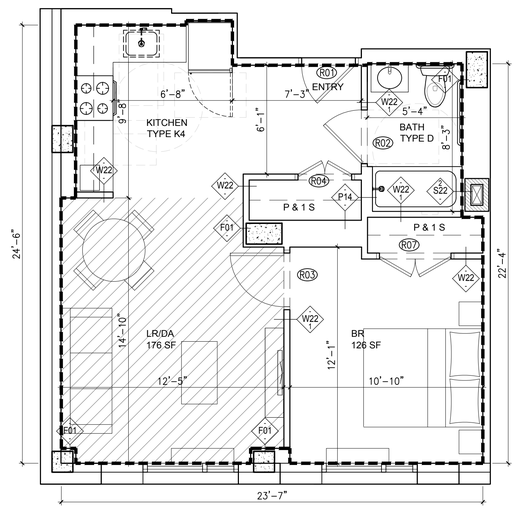

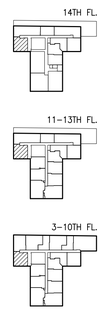

TYPE A
UNIT 301 - 1401
1 BR
527 SF
IH

TYPE A UNIT 1
SCALE: 1/4"=1'-0"

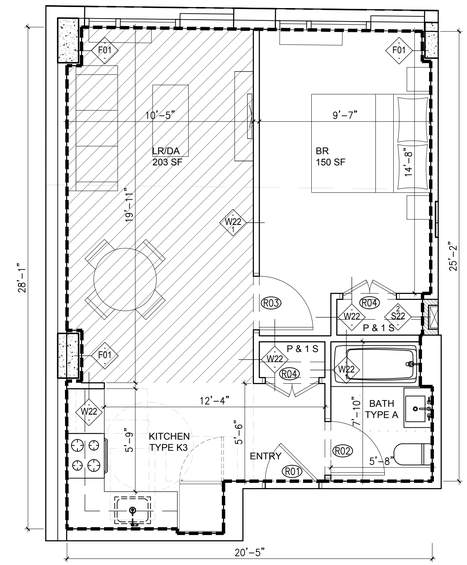

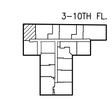

TYPE B
UNIT 302 - 1002
1 BR
531 SF
AFF

TYPE B UNIT 2
SCALE: 1/4"=1'-0"

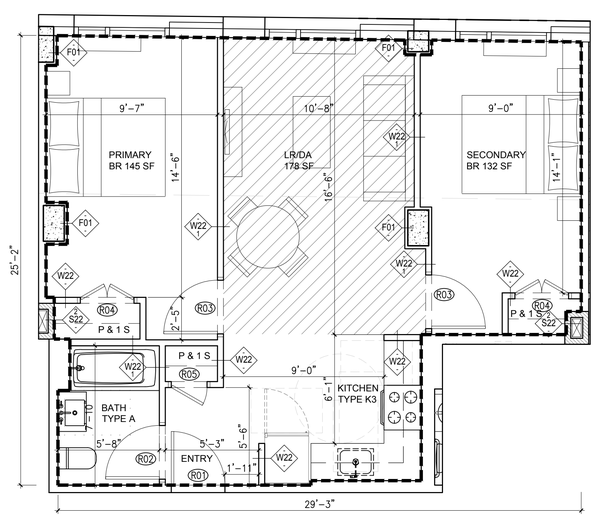

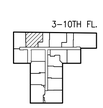

TYPE C
UNIT 303 - 1003
2 BR
655 SF
AFF

TYPE C UNIT 3
SCALE: 1/4"=1'-0"

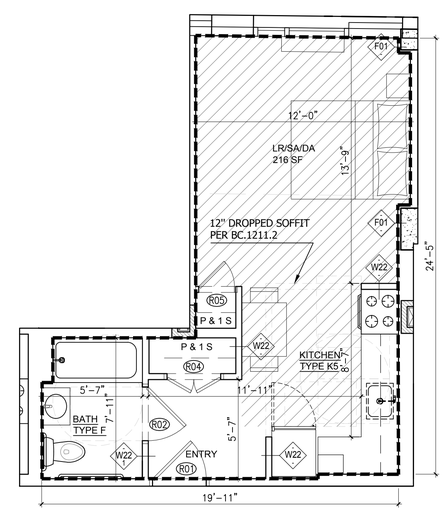

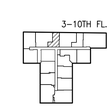

TYPE D
UNIT 304- 1004
0 BR
350 SF
IH

TYPE D UNIT 4
SCALE: 1/4"=1'-0"

Client:

RANGER PROPERTIES
4790 BROADWAY
NEW YORK, NY 10034

Architect:

FOGARTY FINGER
architecture | interiors

69 Walker St, New York, NY 10013
t 212 966 7450 f 212 966 7444

Structural:

Thornton Tomasetti
51 Madison Avenue
New York, NY 10010
Tel 917.661.7800

MEP / FP:

Concessi Engineering, PC
499 7th Avenue, 11th Floor South Tower
New York, NY 10018
Tel 212.629.6810

GEOTECH:

FNA Engineering Services, PC
670 Bergen Boulevard, Floor 2
Ridgefield, NJ 07657
Tel 201.241.2444

FACADE:

Simpson Gumpertz & Heger
550 7th Avenue, 10th Floor
New York, NY 10018
Tel 212.271.7000

CODE:

Metropolis
22 Courtland Street, 10th Floor
New York, NY 10007
Tel 212.233.6344

No.	Date	Issue
02	02.06.2019	DD ESTIMATING
01	11.20.2018	SCHEMATIC DESIGN

Project:

4790 BROADWAY
NEW YORK, NY 10034

Drawing Title:

UNIT TYPE PLANS

Seal & Signature:

DATE (MM-DD-YY): 02-05-2019
PROJECT No.:
DRAWING BY: –
CHK BY: –
DWG. No.: A-150.00
CADD FILE No.:

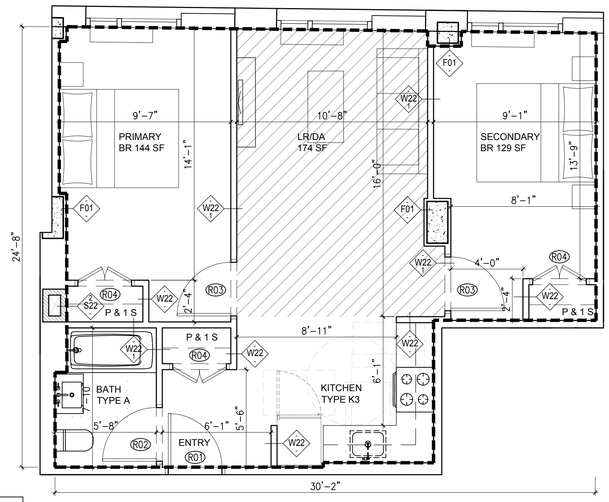

TYPE E	TYPE E
UNIT 305,605-1005	UNIT 405 - 505
2 BR	2 BR
653 SF	653 SF
AFF	IH

TYPE E UNIT 1
SCALE: 1/4"=1'-0"

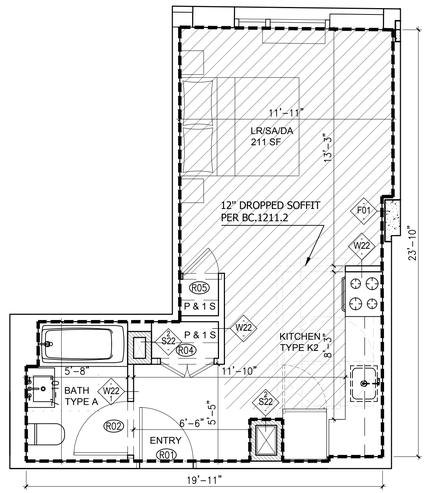

TYPE F
UNIT 306 - 1006
0 BR
340 SF
AFF

TYPE F UNIT 2
SCALE: 1/4"=1'-0"

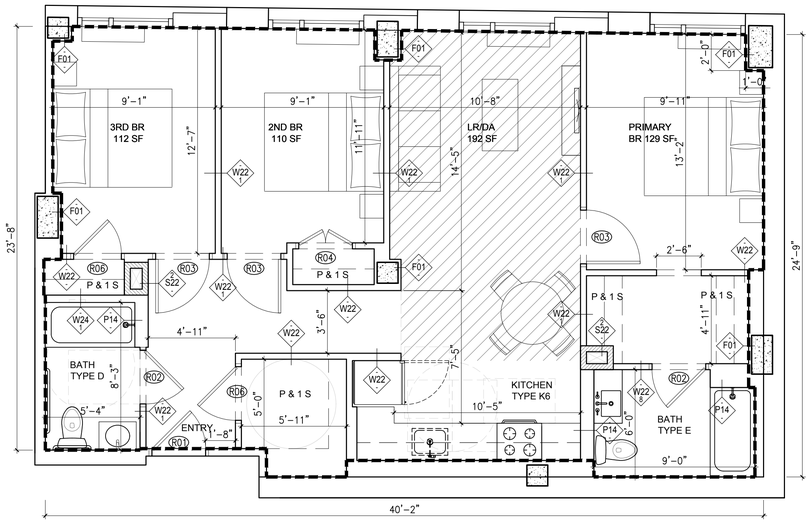

TYPE G	TYPE G	TYPE G	TYPE G	TYPE G
UNIT 307 - 507	UNIT 607	UNIT 707 - 807	UNIT 907	UNIT 1007
3 BR	3 BR	3 BR	3 BR	3 BR
950 SF	950 SF	950 SF	950 SF	950 SF
IH	IH - HVI	AFF	AFF - UFAS	AFF

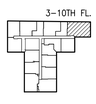

TYPE G UNIT 3
SCALE: 1/4"=1'-0"

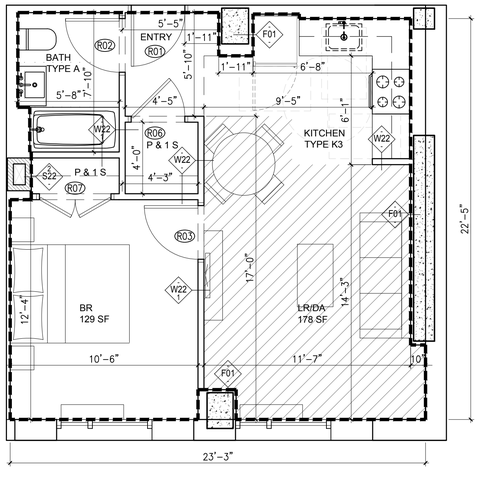

TYPE H
UNIT 308 - 1408
1 BR
494 SF
IH

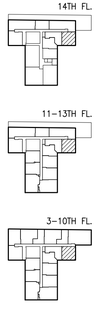

TYPE H UNIT 4
SCALE: 1/4"=1'-0"

Client:

RANGER PROPERTIES
4790 BROADWAY
NEW YORK, NY 10034

Architect:

FOGARTY FINGER
architecture | interiors

69 Walker St, New York, NY 10013
t 212 966 7450 f 212 966 7444

Structural:

Thornton Tomasetti
51 Madison Avenue
New York, NY 10010
Tel 917.661.7800

MEP / FP:

Concessi Engineering, PC
499 7th Avenue, 11th Floor South Tower
New York, NY 10018
Tel 212.629.6810

GEOTECH:

FNA Engineering Services, PC
670 Bergen Boulevard, Floor 2
Ridgefield, NJ 07657
Tel 201.241.2444

FACADE:

Simpson Gumpertz & Heger
550 7th Avenue, 10th Floor
New York, NY 10018
Tel 212.271.7000

CODE:

Metropolis
22 Courtland Street, 10th Floor
New York, NY 10007
Tel 212.233.6344

No.	Date	Issue
02	02.06.2019	DD ESTIMATING
01	11.20.2018	SCHEMATIC DESIGN

Project:

4790 BROADWAY
NEW YORK, NY 10034

Drawing Title:

UNIT TYPE PLANS

Seal & Signature:

DATE (MM-DD-YY): 02-05-2019
PROJECT No.:
DRAWING BY: –
CHK BY: –
DWG. No.: A-151.00
CADD FILE No.:

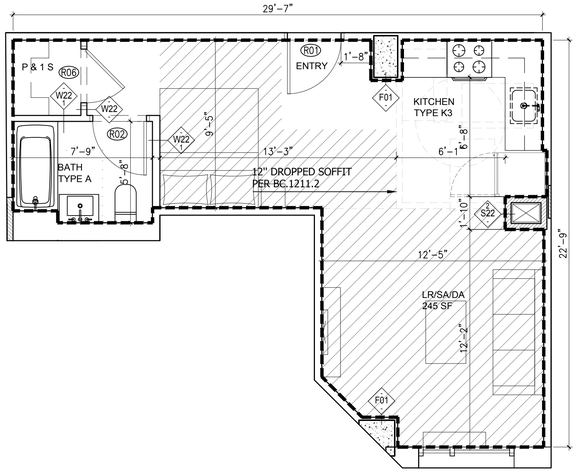

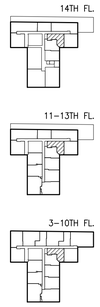

TYPE J
UNIT 309 - 1409
0 BR
431 SF
AFF

TYPE J UNIT 1
SCALE: 1/4"=1'-0"

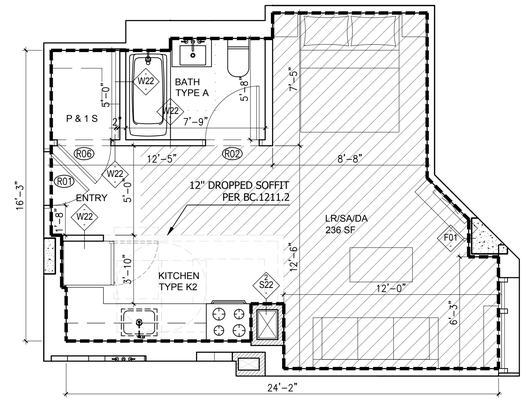

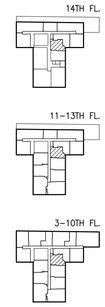

TYPE K
UNIT 310 - 1410
0 BR
400 SF
IH

TYPE K UNIT 2
SCALE: 1/4"=1'-0"

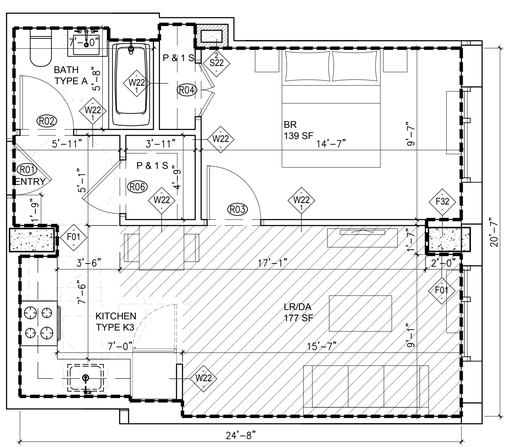

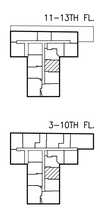

TYPE M	TYPE M
UNIT 311 - 511	UNIT 611 - 1311
1 BR	1 BR
504 SF	504 SF
IH	AFF

TYPE M UNIT 3
SCALE: 1/4"=1'-0"

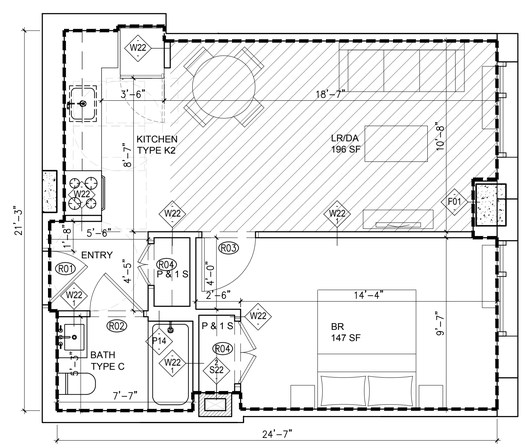

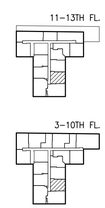

TYPE N
UNIT 312 - 1312
1 BR
502 SF
AFF

TYPE N UNIT 4
SCALE: 1/4"=1'-0"

Client:

RANGER PROPERTIES
4790 BROADWAY
NEW YORK, NY 10034

Architect:

FOGARTY FINGER
architecture | interiors

69 Walker St, New York, NY 10013
t 212 966 7450 f 212 966 7444

Structural:

Thornton Tomasetti
51 Madison Avenue
New York, NY 10010
Tel 917.661.7800

MEP / FP:

Concessi Engineering, PC
499 7th Avenue, 11th Floor South Tower
New York, NY 10018
Tel 212.629.6810

GEOTECH:

FNA Engineering Services, PC
670 Bergen Boulevard, Floor 2
Ridgefield, NJ 07657
Tel 201.241.2444

FACADE:

Simpson Gumpertz & Heger
550 7th Avenue, 10th Floor
New York, NY 10018
Tel 212.271.7000

CODE:

Metropolis
22 Courtland Street, 10th Floor
New York, NY 10007
Tel 212.233.6344

No.	Date	Issue
02	02.06.2019	DD ESTIMATING
01	11.20.2018	SCHEMATIC DESIGN

Project:

4790 BROADWAY
NEW YORK, NY 10034

Drawing Title:

UNIT TYPE PLANS

Seal & Signature:

DATE (MM-DD-YY): 02-05-2019
PROJECT No.:
DRAWING BY: –
CHK BY: –
DWG. No.: A-152.00
CADD FILE No.:

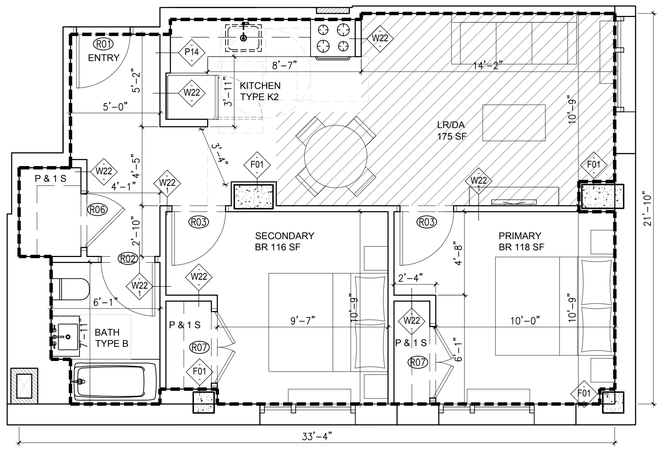

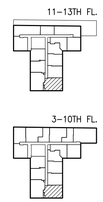

TYPE P
UNIT 313 - 1313
2 BR
668 SF
IH

TYPE P UNIT 1
SCALE: 1/4"=1'-0"

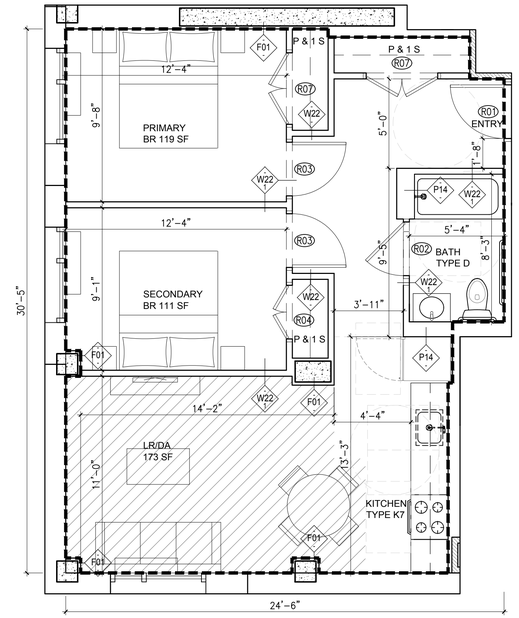

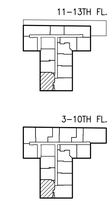

TYPE Q
UNIT 414 - 1314
2 BR
690 SF
IH

TYPE Q
UNIT 314
2 BR
690 SF
AFF

TYPE Q UNIT 2
SCALE: 1/4"=1'-0"

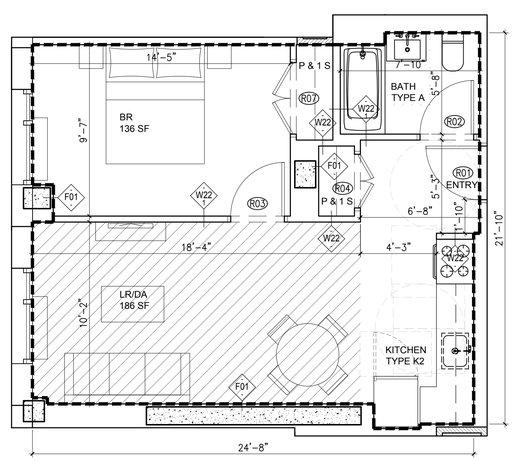

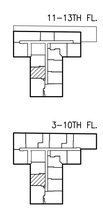

TYPE R
UNIT 315 - 1315
1 BR
507 SF
AFF

TYPE R UNIT 3
SCALE: 1/4"=1'-0"

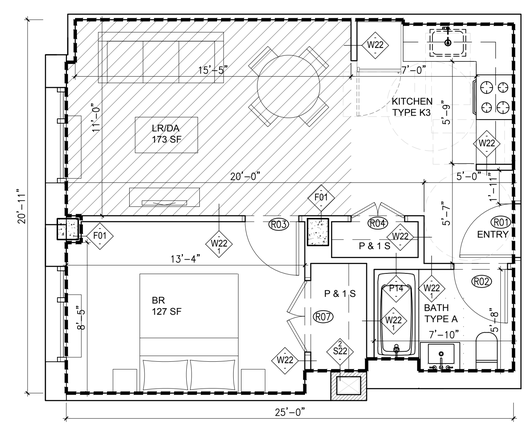

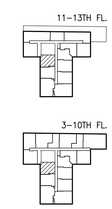

TYPE S
UNIT 316 - 1316
1 BR
501 SF
IH

TYPE S UNIT 4
SCALE: 1/4"=1'-0"

Client:

RANGER PROPERTIES
4790 BROADWAY
NEW YORK, NY 10034

Architect:

FOGARTY FINGER
architecture | interiors

69 Walker St, New York, NY 10013
t 212 966 7450 f 212 966 7444

Structural:

Thornton Tomasetti
51 Madison Avenue
New York, NY 10010
Tel 917.661.7800

MEP / FP:

Concessi Engineering, PC
499 7th Avenue, 11th Floor South Tower
New York, NY 10018
Tel 212.629.6810

GEOTECH:

FNA Engineering Services, PC
670 Bergen Boulevard, Floor 2
Ridgefield, NJ 07657
Tel 201.241.2444

FACADE:

Simpson Gumpertz & Heger
550 7th Avenue, 10th Floor
New York, NY 10018
Tel 212.271.7000

CODE:

Metropolis
22 Courtland Street, 10th Floor
New York, NY 10007
Tel 212.233.6344

No.	Date	Issue
02	02.06.2019	DD ESTIMATING
01	11.20.2018	SCHEMATIC DESIGN

Project:

4790 BROADWAY
NEW YORK, NY 10034

Drawing Title:

UNIT TYPE PLANS

Seal & Signature:

DATE (MM-DD-YY): 02-05-2019
PROJECT No.:
DRAWING BY: –
CHK BY: –
DWG. No.: A-153.00
CADD FILE No.:

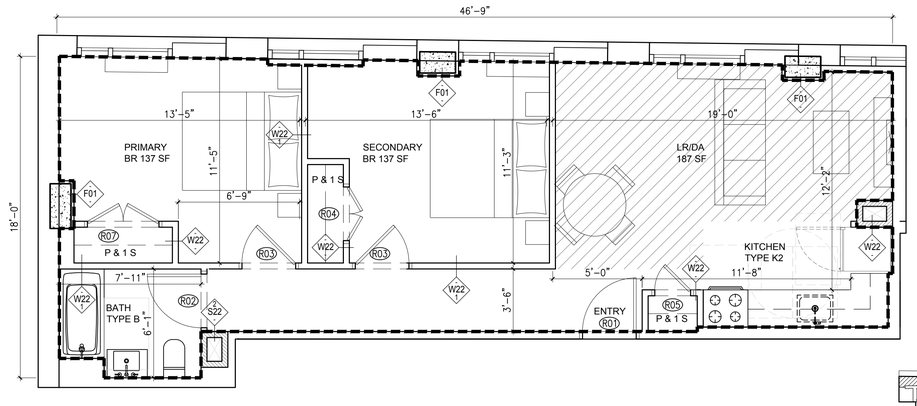

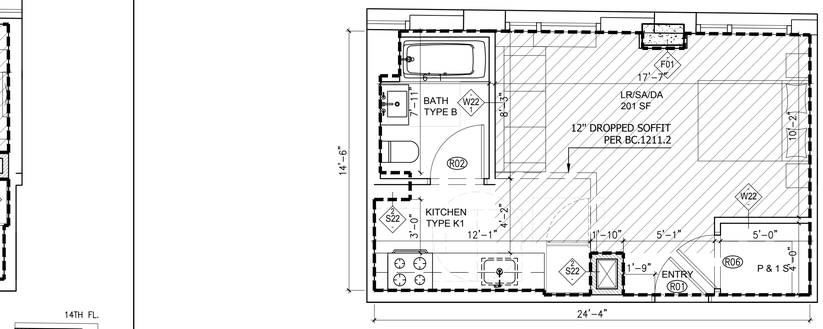

TYPE T
UNIT 1103 - 1403
2 BR
706 SF
AFF

14TH FL.

11–13TH FL.

TYPE T UNIT 1
SCALE: 1/4"=1'-0"

TYPE U	TYPE U
UNIT 1104 - 1304	UNIT 1404
0 BR	0 BR
340 SF	340 SF
IH	AFF

14TH FL.

11–13TH FL.

TYPE U UNIT 2
SCALE: 1/4"=1'-0"

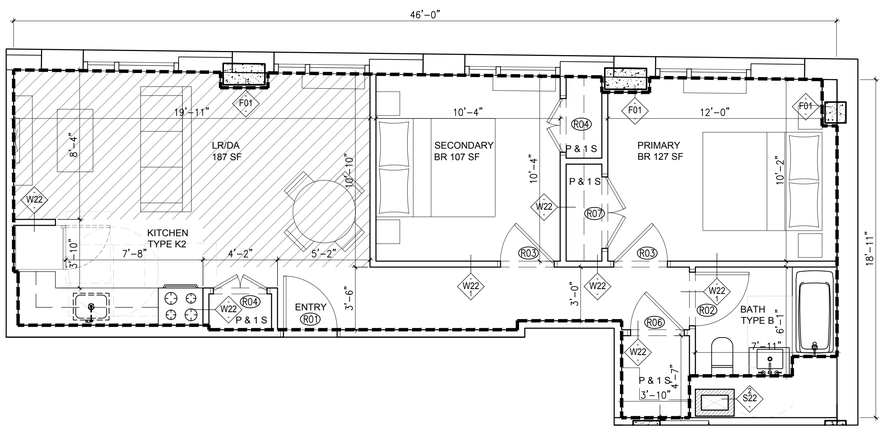

TYPE V
UNIT 1105 - 1405
2 BR
680 SF
AFF

14TH FL.

11–13TH FL.

TYPE V UNIT 3
SCALE: 1/4"=1'-0"

NOT USED

Client:

RANGER PROPERTIES
4790 BROADWAY
NEW YORK, NY 10034

Architect:

FOGARTY FINGER
architecture | interiors

69 Walker St, New York, NY 10013
t 212 966 7450 f 212 966 7444

Structural:

Thornton Tomasetti
51 Madison Avenue
New York, NY 10010
Tel 917.661.7800

MEP / FP:

Concessi Engineering, PC
499 7th Avenue, 11th Floor South Tower
New York, NY 10018
Tel 212.629.6810

GEOTECH:

FNA Engineering Services, PC
670 Bergen Boulevard, Floor 2
Ridgefield, NJ 07657
Tel 201.241.2444

FACADE:

Simpson Gumpertz & Heger
550 7th Avenue, 10th Floor
New York, NY 10018
Tel 212.271.7000

CODE:

Metropolis
22 Courtland Street, 10th Floor
New York, NY 10007
Tel 212.233.6344

No.	Date	Issue
02	02.06.2019	DD ESTIMATING
01	11.20.2018	SCHEMATIC DESIGN

Project:

4790 BROADWAY
NEW YORK, NY 10034

Drawing Title:

UNIT TYPE PLANS

Seal & Signature:

DATE (MM-DD-YY): 02-05-2019
PROJECT No.:
DRAWING BY: –
CHK BY: –
DWG. No.: A-154.00
CADD FILE No.:

TYPE D1
UNIT 1004
0 BR
351 SF
IH - UFAS

TYPE D1
UNIT 404
0 BR
351 SF
IH - UFAS

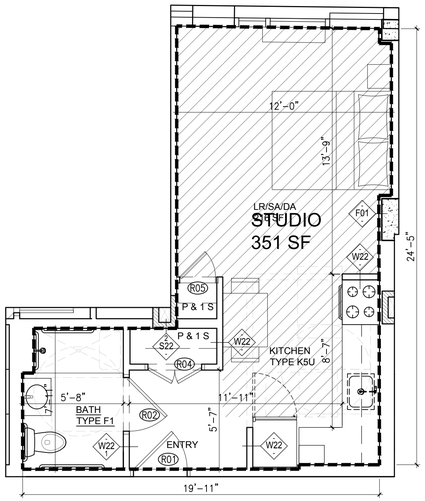

UNIT D1 (UFAS) 1
SCALE: 1/4"=1'-0"

TYPE A1
UNIT 1401
1 BR
527 SF
IH - UFAS

TYPE A1
UNIT 1201
1 BR
527 SF
IH - UFAS

TYPE A1
UNIT 801
1 BR
527 SF
IH - UFAS

TYPE A1
UNIT 501
1 BR
527 SF
IH - UFAS

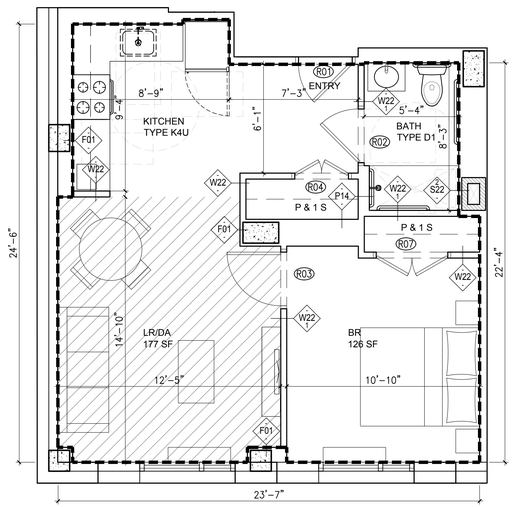

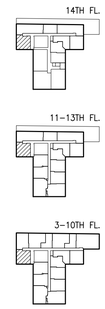

UNIT A1 (UFAS) 4
SCALE: 1/4"=1'-0"

TYPE Q1
UNIT 1314
2 BR
690 SF
IH - UFAS

TYPE Q1
UNIT 714
2 BR
690 SF
IH - UFAS

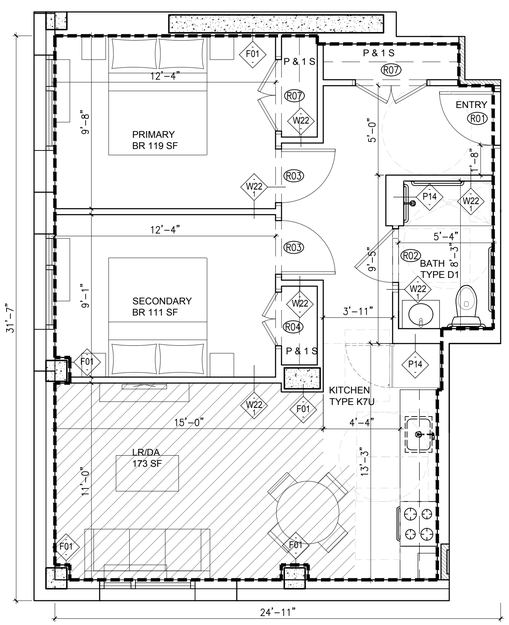

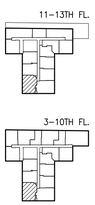

UNIT Q1 (UFAS) 3
SCALE: 1/4"=1'-0"

TYPE G1
UNIT 907
3 BR
950 SF
AFF - UFAS

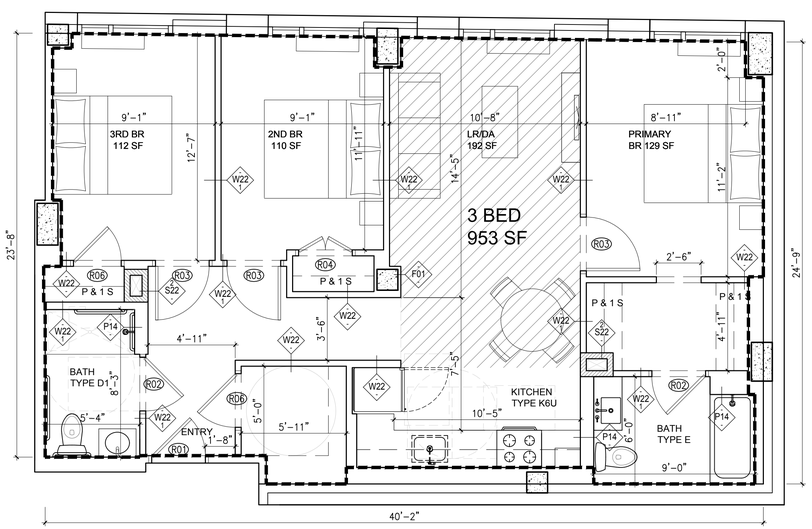

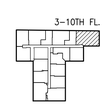

UNIT G1 (UFAS) 2
SCALE: 1/4"=1'-0"

Client:

RANGER PROPERTIES
4790 BROADWAY
NEW YORK, NY 10034

Architect:

FOGARTY FINGER
architecture | interiors

69 Walker St, New York, NY 10013
t 212 966 7450 f 212 966 7444

Structural:

Thornton Tomasetti
51 Madison Avenue
New York, NY 10010
Tel 917.661.7800

MEP / FP:

Concessi Engineering, PC
499 7th Avenue, 11th Floor South Tower
New York, NY 10018
Tel 212.629.6810

GEOTECH:

FNA Engineering Services, PC
670 Bergen Boulevard, Floor 2
Ridgefield, NJ 07657
Tel 201.241.2444

FACADE:

Simpson Gumpertz & Heger
550 7th Avenue, 10th Floor
New York, NY 10018
Tel 212.271.7000

CODE:

Metropolis
22 Courtland Street, 10th Floor
New York, NY 10007
Tel 212.233.6344

No.	Date	Issue
02	02.06.2019	DD ESTIMATING
01	11.20.2018	SCHEMATIC DESIGN

Project:

4790 BROADWAY
NEW YORK, NY 10034

Drawing Title:

UNIT TYPE PLANS

Seal & Signature:

DATE (MM-DD-YY): 02-05-2019
PROJECT No.:
DRAWING BY: –
CHK BY: –
DWG. No.: A-155.00
CADD FILE No.:

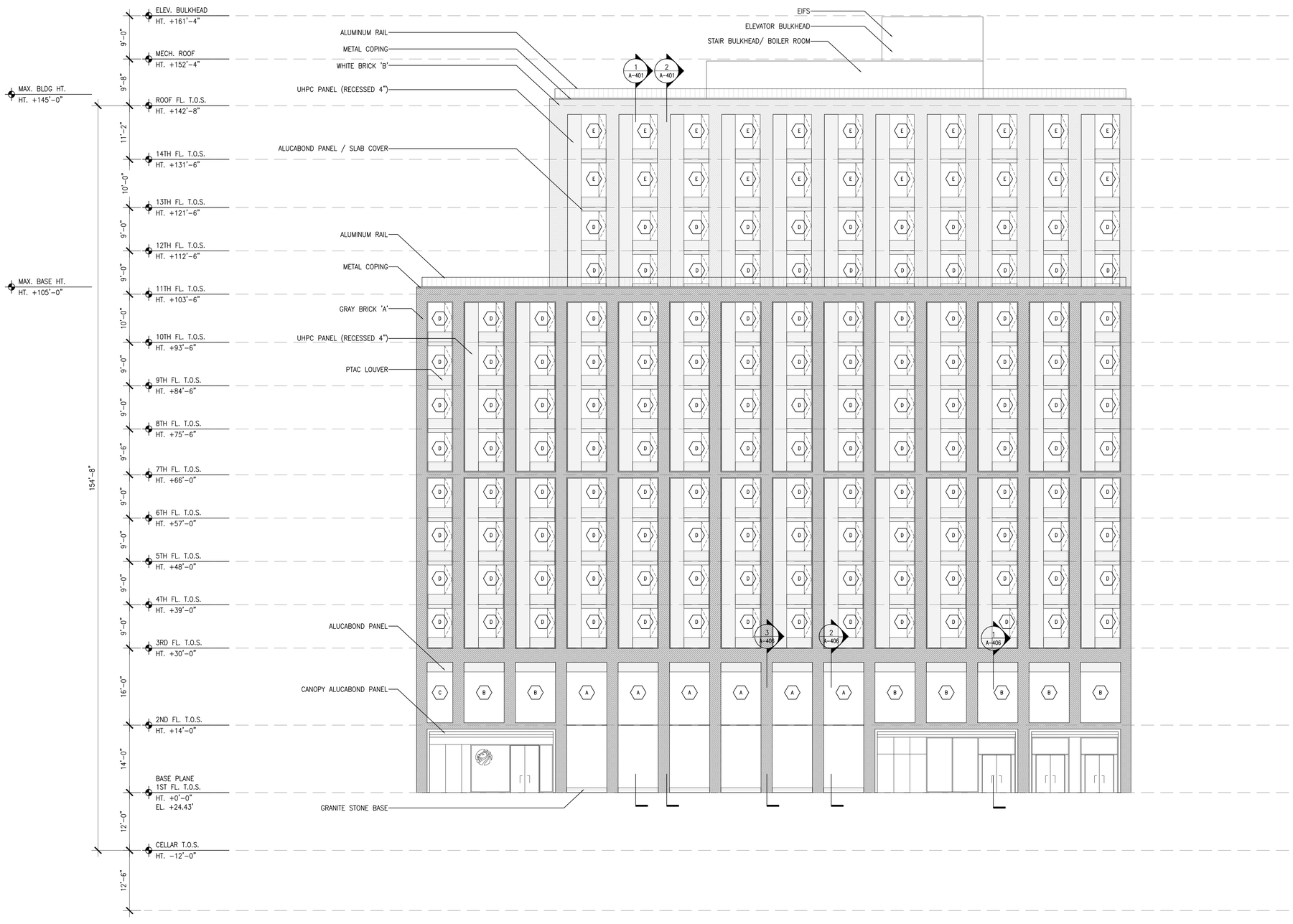

1 NORTH ELEVATION
SCALE: 3/32" = 1'-0"

Client:

RANGER PROPERTIES
4790 BROADWAY
NEW YORK, NY 10034

Architect:

FOGARTY FINGER
architecture | interiors

69 Walker St, New York, NY 10013
t 212 966 7450 f 212 966 7444

Structural:

Thornton Tomasetti
51 Madison Avenue
New York, NY 10010
Tel 917.661.7800

MEP / FP:

Concessi Engineering, PC
499 7th Avenue, 11th Floor South Tower
New York, NY 10018
Tel 212.629.6810

GEOTECH:

FNA Engineering Services, PC
670 Bergen Boulevard, Floor 2
Ridgefield, NJ 07657
Tel 201.241.2444

FACADE:

Simpson Gumpertz & Heger
550 7th Avenue, 10th Floor
New York, NY 10018
Tel 212.271.7000

CODE:

Metropolis
22 Courtland Street, 10th Floor
New York, NY 10007
Tel 212.233.6344

No.	Date	Issue
02	02.06.2019	DD ESTIMATING
01	11.20.2018	SCHEMATIC DESIGN

Project:

4790 BROADWAY
NEW YORK, NY 10034

Drawing Title:

NORTH ELEVATION

Seal & Signature:

DATE (MM-DD-YY): 02-05-2019
PROJECT No.:
DRAWING BY: --
CHK BY: --
DWG. No.: A-201.00
CADD FILE No.:

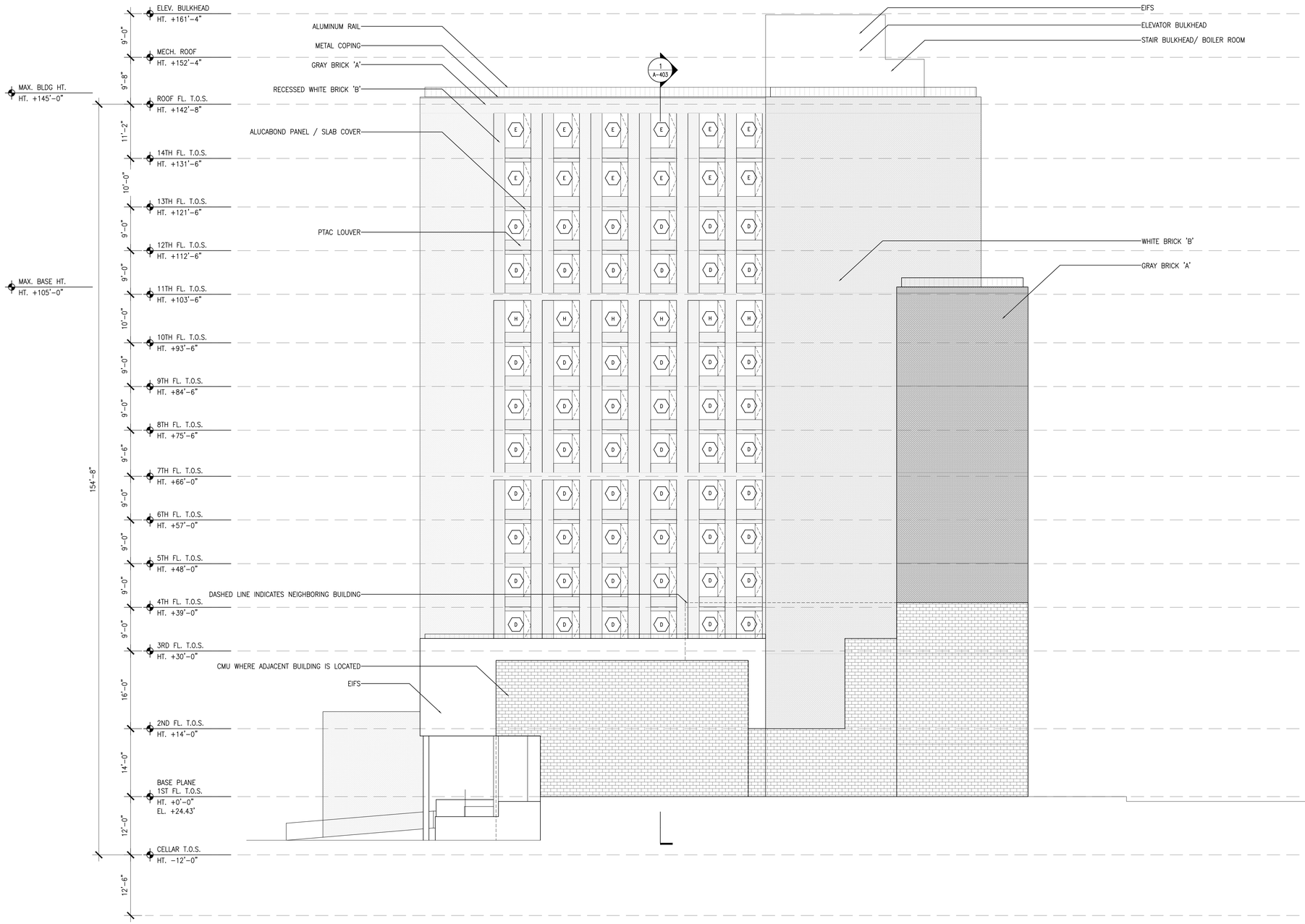

1 EAST ELEVATION
SCALE: 3/32" = 1'-0"

Client:

RANGER PROPERTIES
4790 BROADWAY
NEW YORK, NY 10034

Architect:

FOGARTY FINGER
architecture | interiors

69 Walker St, New York, NY 10013
t 212 966 7450 f 212 966 7444

Structural:

Thornton Tomasetti
51 Madison Avenue
New York, NY 10010
Tel 917.661.7800

MEP / FP:

Concessi Engineering, PC
499 7th Avenue, 11th Floor South Tower
New York, NY 10018
Tel 212.629.6810

GEOTECH:

FNA Engineering Services, PC
670 Bergen Boulevard, Floor 2
Ridgefield, NJ 07657
Tel 201.241.2444

FACADE:

Simpson Gumpertz & Heger
550 7th Avenue, 10th Floor
New York, NY 10018
Tel 212.271.7000

CODE:

Metropolis
22 Courtland Street, 10th Floor
New York, NY 10007
Tel 212.233.6344

No.	Date	Issue
02	02.06.2019	DD ESTIMATING
01	11.20.2018	SCHEMATIC DESIGN

Project:

4790 BROADWAY
NEW YORK, NY 10034

Drawing Title:

EAST ELEVATION

Seal & Signature:

DATE (MM-DD-YY): 02-05-2019
PROJECT No.:
DRAWING BY: --
CHK BY: --
DWG. No.: A-202.00
CADD FILE No.:

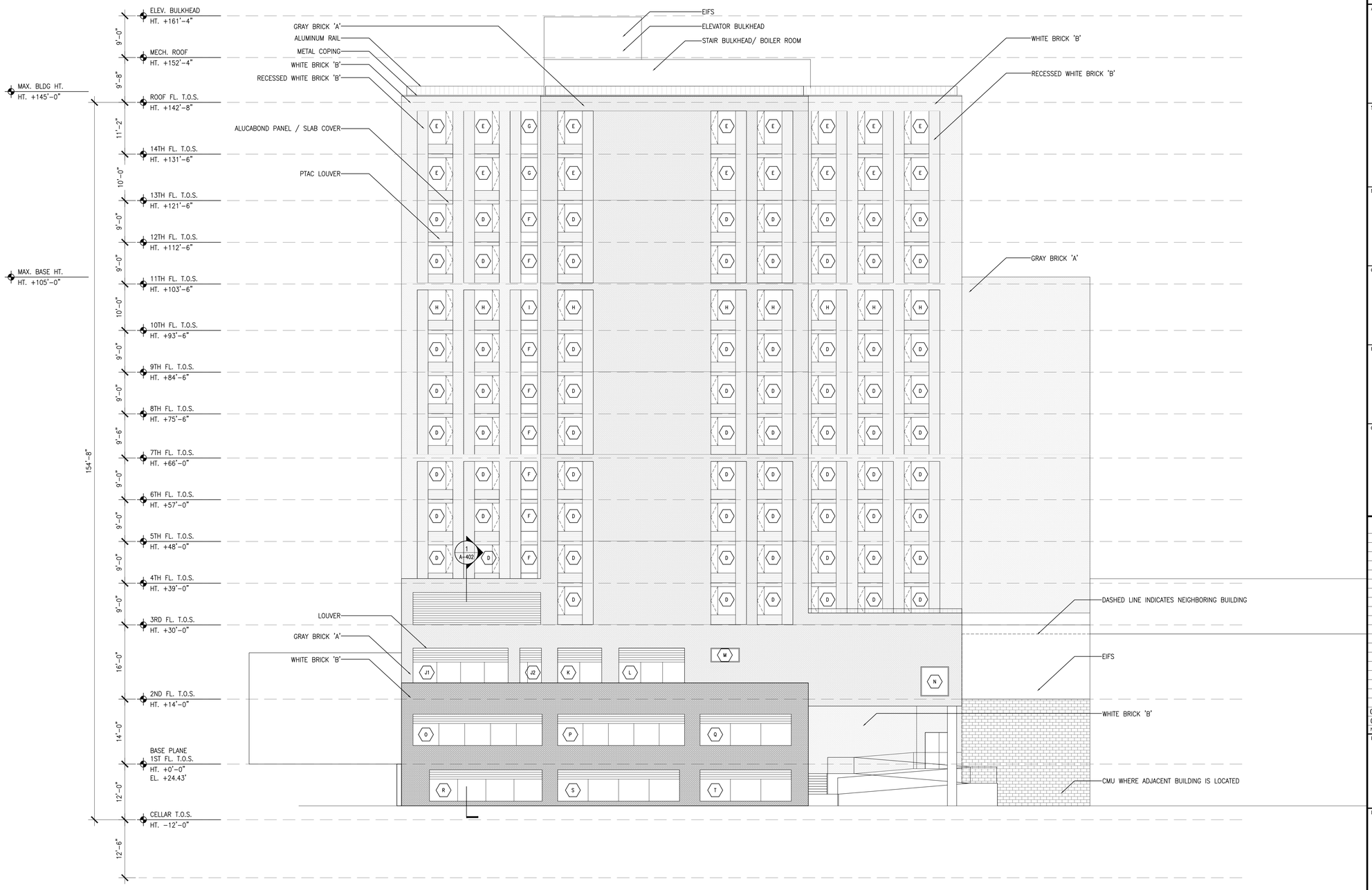

1 SOUTH ELEVATION
SCALE: 3/32" = 1'-0"

Client:

RANGER PROPERTIES
4790 BROADWAY
NEW YORK, NY 10034

Architect:

FOGARTY FINGER
architecture | interiors
69 Walker St, New York, NY 10013
t 212 966 7450 f 212 966 7444

Structural:

Thornton Tomasetti
51 Madison Avenue
New York, NY 10010
Tel 917.661.7800

MEP / FP:

Concessi Engineering, PC
499 7th Avenue, 11th Floor South Tower
New York, NY 10018
Tel 212.629.6810

GEOTECH:

FNA Engineering Services, PC
670 Bergen Boulevard, Floor 2
Ridgefield, NJ 07657
Tel 201.241.2444

FACADE:

Simpson Gumpertz & Heger
550 7th Avenue, 10th Floor
New York, NY 10018
Tel 212.271.7000

CODE:

Metropolis
22 Courtland Street, 10th Floor
New York, NY 10007
Tel 212.233.6344

No.	Date	Issue
02	02.06.2019	DD ESTIMATING
01	11.20.2018	SCHEMATIC DESIGN

Project:

4790 BROADWAY
NEW YORK, NY 10034

Drawing Title:

SOUTH ELEVATION

Seal & Signature:

DATE (MM-DD-YY): 02-05-2019
PROJECT No.:
DRAWING BY: --
CHK BY: --
DWG. No.: A-203.00
CADD FILE No.:

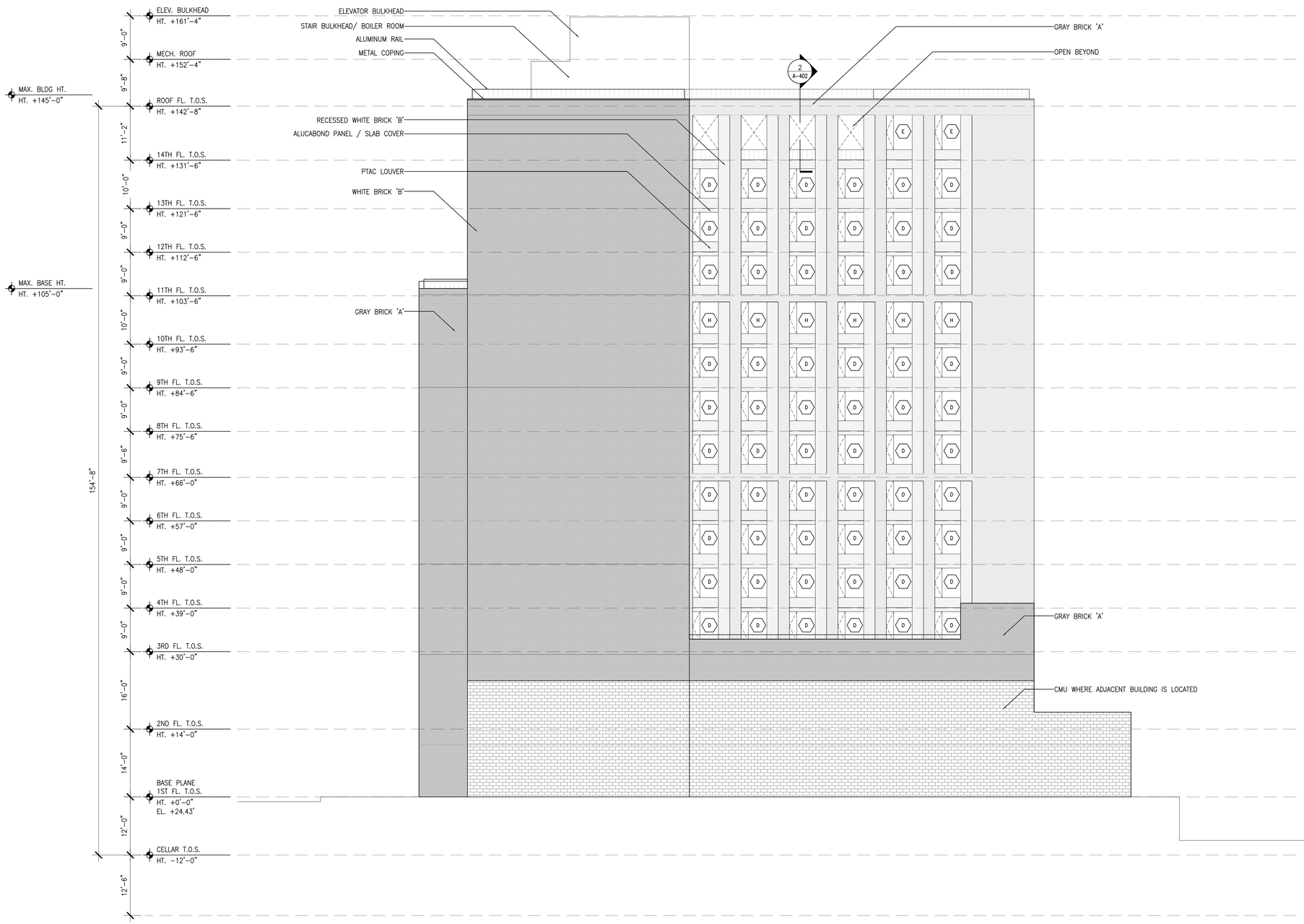

1 WEST ELEVATION
SCALE: 3/32" = 1'-0"

Client:

RANGER PROPERTIES
4790 BROADWAY
NEW YORK, NY 10034

Architect:

FOGARTY FINGER
architecture | interiors

69 Walker St, New York, NY 10013
t 212 966 7450 f 212 966 7444

Structural:

Thornton Tomasetti
51 Madison Avenue
New York, NY 10010
Tel 917.661.7800

MEP / FP:

Concessi Engineering, PC
499 7th Avenue, 11th Floor South Tower
New York, NY 10018
Tel 212.629.6810

GEOTECH:

FNA Engineering Services, PC
670 Bergen Boulevard, Floor 2
Ridgefield, NJ 07657
Tel 201.241.2444

FACADE:

Simpson Gumpertz & Heger
550 7th Avenue, 10th Floor
New York, NY 10018
Tel 212.271.7000

CODE:

Metropolis
22 Courtland Street, 10th Floor
New York, NY 10007
Tel 212.233.6344

No.	Date	Issue
02	02.06.2019	DD ESTIMATING
01	11.20.2018	SCHEMATIC DESIGN

Project:

4790 BROADWAY
NEW YORK, NY 10034

Drawing Title:

WEST ELEVATION & OTHERS

Seal & Signature:

DATE (MM-DD-YY): 02-05-2019
PROJECT No.:
DRAWING BY: --
CHK BY: --
DWG. No.: A-204.00
CADD FILE No.:

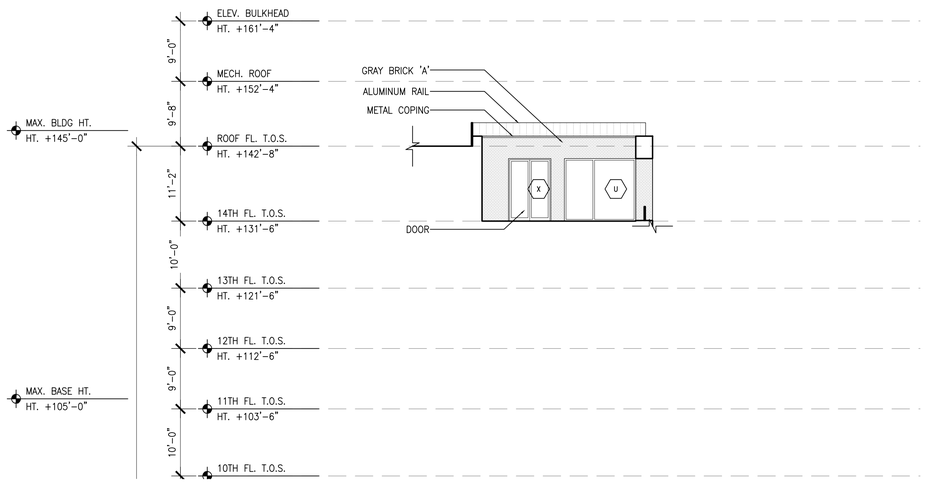

1 NORTH ELEVATION - TERRACE

SCALE: 3/32" = 1'-0"

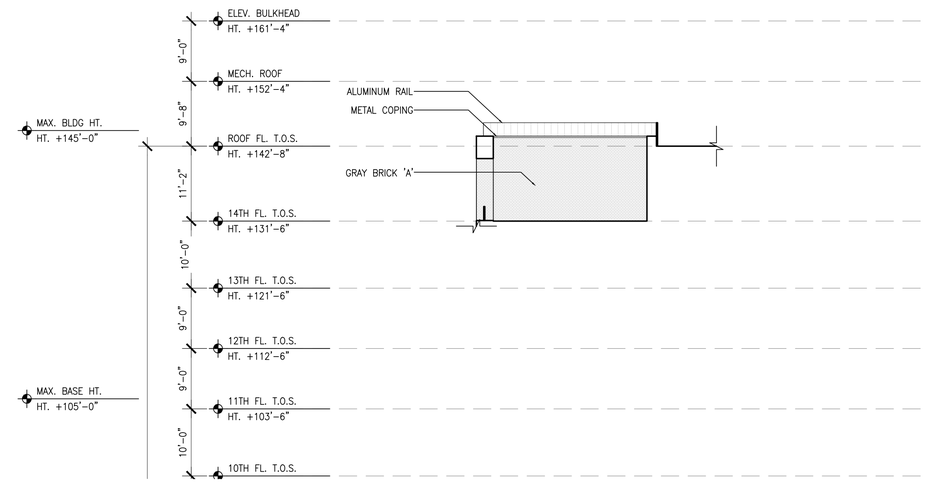

2 SOUTH ELEVATION - TERRACE

SCALE: 3/32" = 1'-0"

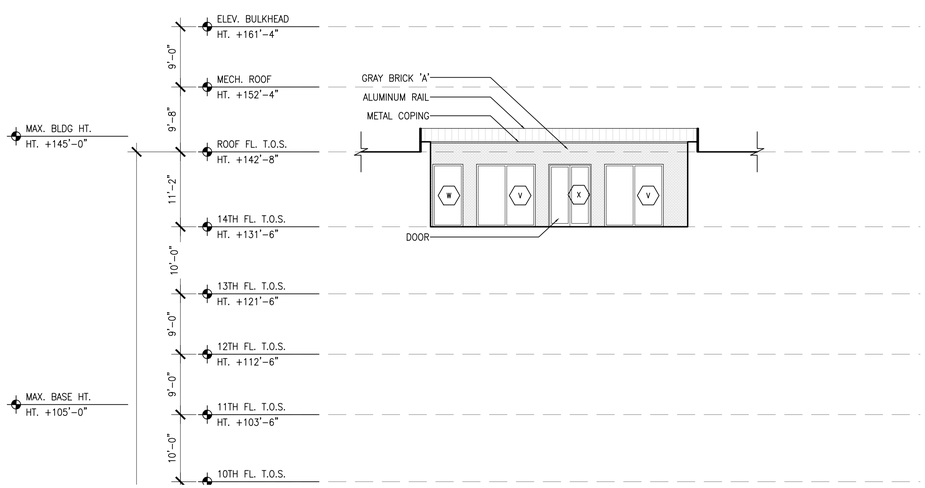

3 WEST ELEVATION - TERRACE

SCALE: 3/32" = 1'-0"

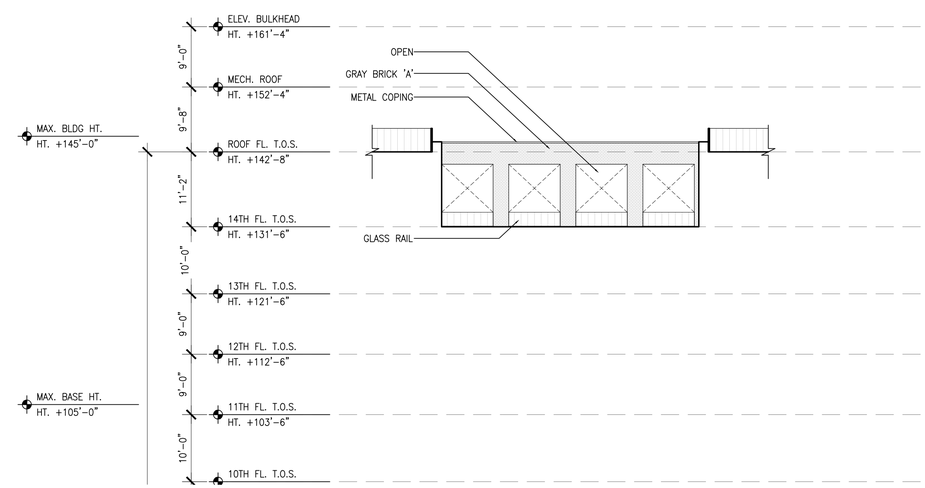

4 EAST ELEVATION - TERRACE

SCALE: 3/32" = 1'-0"

Client:

RANGER PROPERTIES
4790 BROADWAY
NEW YORK, NY 10034

Architect:

FOGARTY FINGER
architecture | interiors

69 Walker St, New York, NY 10013
t 212 966 7450 f 212 966 7444

Structural:

Thornton Tomasetti
51 Madison Avenue
New York, NY 10010
Tel 917.661.7800

MEP / FP:

Concessi Engineering, PC
499 7th Avenue, 11th Floor South Tower
New York, NY 10018
Tel 212.629.6810

GEOTECH:

FNA Engineering Services, PC
670 Bergen Boulevard, Floor 2
Ridgefield, NJ 07657
Tel 201.241.2444

FACADE:

Simpson Gumpertz & Heger
550 7th Avenue, 10th Floor
New York, NY 10018
Tel 212.271.7000

CODE:

Metropolis
22 Courtland Street, 10th Floor
New York, NY 10007
Tel 212.233.6344

No.	Date	Issue
02	02.06.2019	DD ESTIMATING
01	11.20.2018	SCHEMATIC DESIGN

Project:

4790 BROADWAY
NEW YORK, NY 10034

Drawing Title:

ROOF TERRACE
ELEVATIONS

Seal & Signature:

DATE (MM-DD-YY): 02-05-2019
PROJECT No.:
DRAWING BY: –
CHK BY: –
DWG. No.: A-205.00
CADD FILE No.:

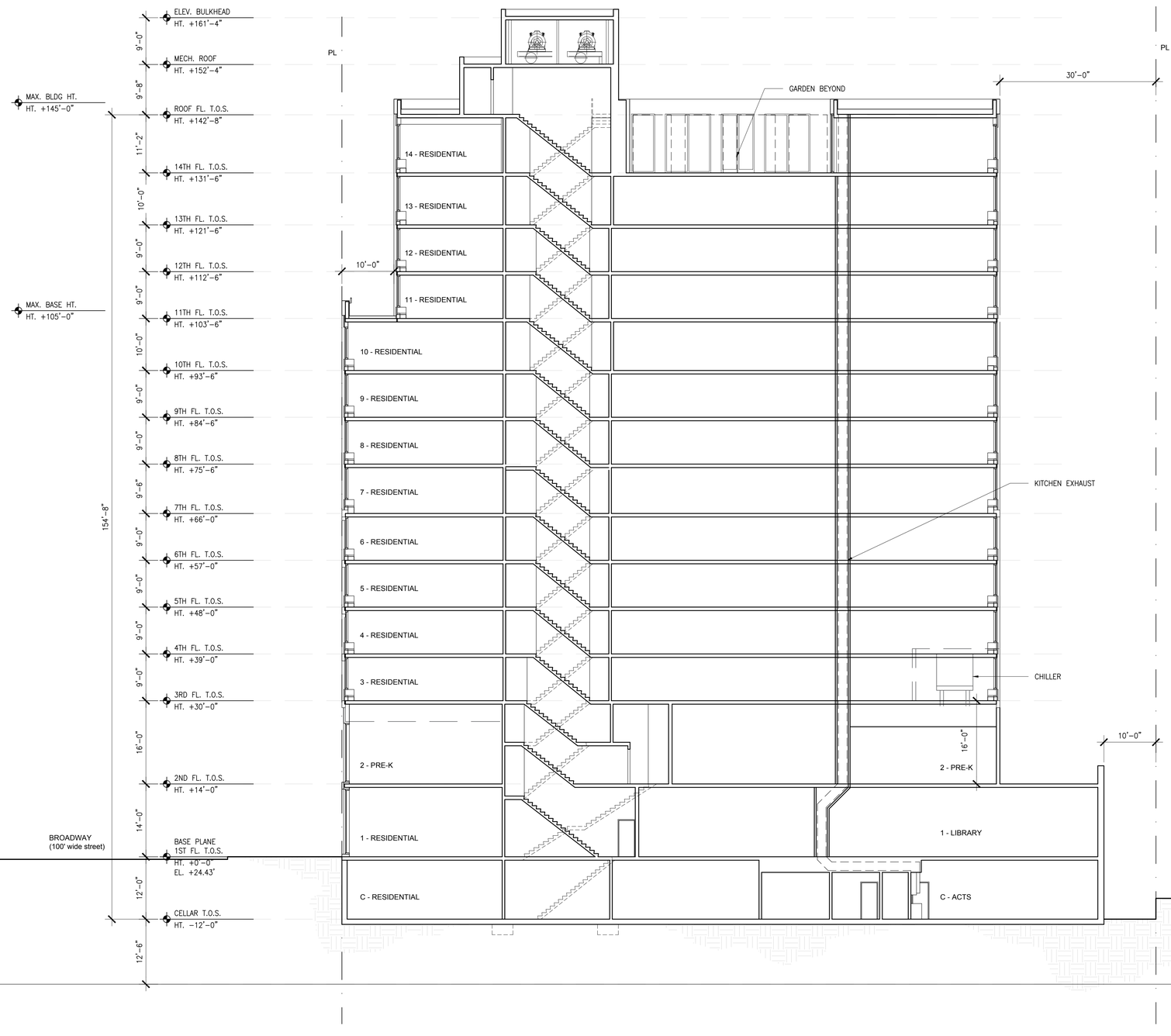

1 NORTH - SOUTH BUILDING SECTION

SCALE: 3/32" = 1'-0"

Client:

RANGER PROPERTIES
4790 BROADWAY
NEW YORK, NY 10034

Architect:

FOGARTY FINGER
architecture | interiors

69 Walker St, New York, NY 10013
t 212 966 7450 f 212 966 7444

Structural:

Thornton Tomasetti
51 Madison Avenue
New York, NY 10010
Tel 917.661.7800

MEP / FP:

Concessi Engineering, PC
499 7th Avenue, 11th Floor South Tower
New York, NY 10018
Tel 212.629.6810

GEOTECH:

FNA Engineering Services, PC
670 Bergen Boulevard, Floor 2
Ridgefield, NJ 07657
Tel 201.241.2444

FACADE:

Simpson Gumpertz & Heger
550 7th Avenue, 10th Floor
New York, NY 10018
Tel 212.271.7000

CODE:

Metropolis
22 Courtland Street, 10th Floor
New York, NY 10007
Tel 212.233.6344

No.	Date	Issue
02	02.06.2019	DD ESTIMATING
01	11.20.2018	SCHEMATIC DESIGN

Project:

4790 BROADWAY
NEW YORK, NY 10034

Drawing Title:

BUILDING SECTION
NORTH – SOUTH

Seal & Signature:

DATE (MM-DD-YY): 02-05-2019
PROJECT No.:
DRAWING BY: --
CHK BY: --
DWG. No.: A-301.00
CADD FILE No.:

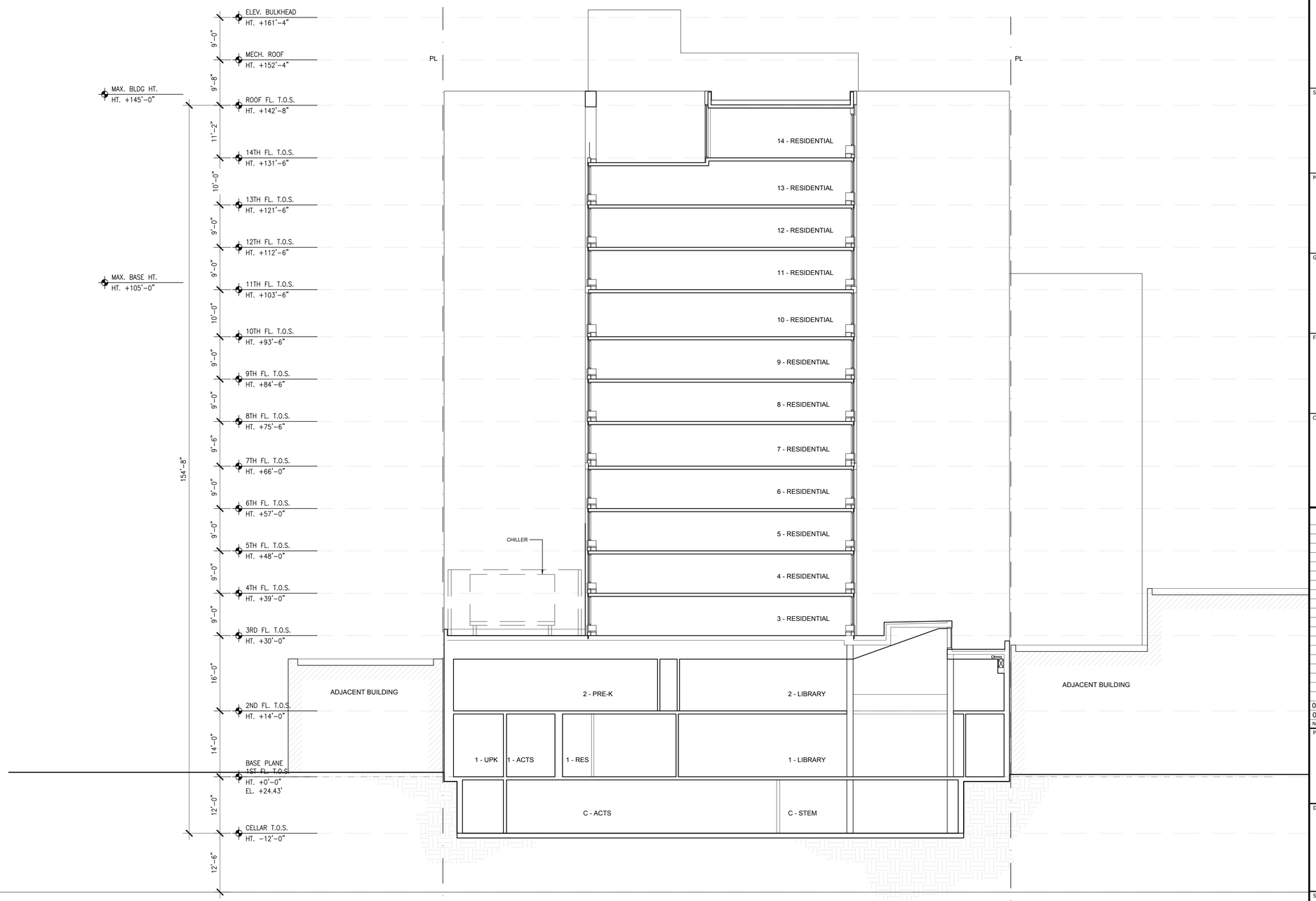

1 WEST - EAST BUILDING SECTION
SCALE: 3/32" = 1'-0"

Client:

RANGER PROPERTIES
4790 BROADWAY
NEW YORK, NY 10034

Architect:

FOGARTY FINGER
architecture interiors
69 Walker St, New York, NY 10013
t 212 966 7450 f 212 966 7444

Structural:

Thornton Tomasetti
51 Madison Avenue
New York, NY 10010
Tel 917.661.7800

MEP / FP:

Concessi Engineering, PC
499 7th Avenue, 11th Floor South Tower
New York, NY 10018
Tel 212.629.6810

GEOTECH:

FNA Engineering Services, PC
670 Bergen Boulevard, Floor 2
Ridgefield, NJ 07657
Tel 201.241.2444

FACADE:

Simpson Gumpertz & Heger
550 7th Avenue, 10th Floor
New York, NY 10018
Tel 212.271.7000

CODE:

Metropolis
22 Courtland Street, 10th Floor
New York, NY 10007
Tel 212.233.6344

No.	Date	Issue
02	02.06.2019	DD ESTIMATING
01	11.20.2018	SCHEMATIC DESIGN

Project:

4790 BROADWAY
NEW YORK, NY 10034

Drawing Title:

BUILDING SECTION
WEST – EAST

Seal & Signature:

DATE (MM-DD-YY): 02-05-2019
PROJECT No.:
DRAWING BY: --
CHK BY: --
DWG. No.: A-302.00
CADD FILE No.:

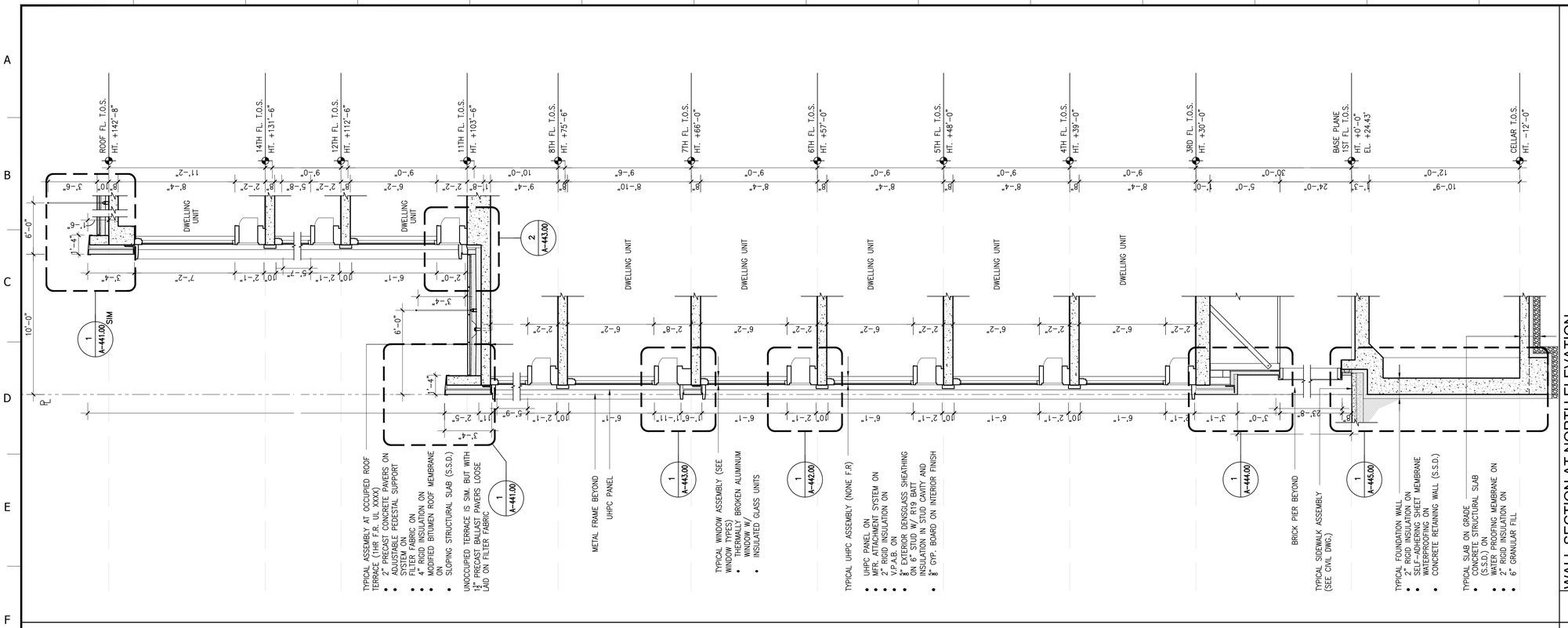

1 WALL SECTION AT NORTH ELEVATION
SCALE: 1/4" = 1'-0"

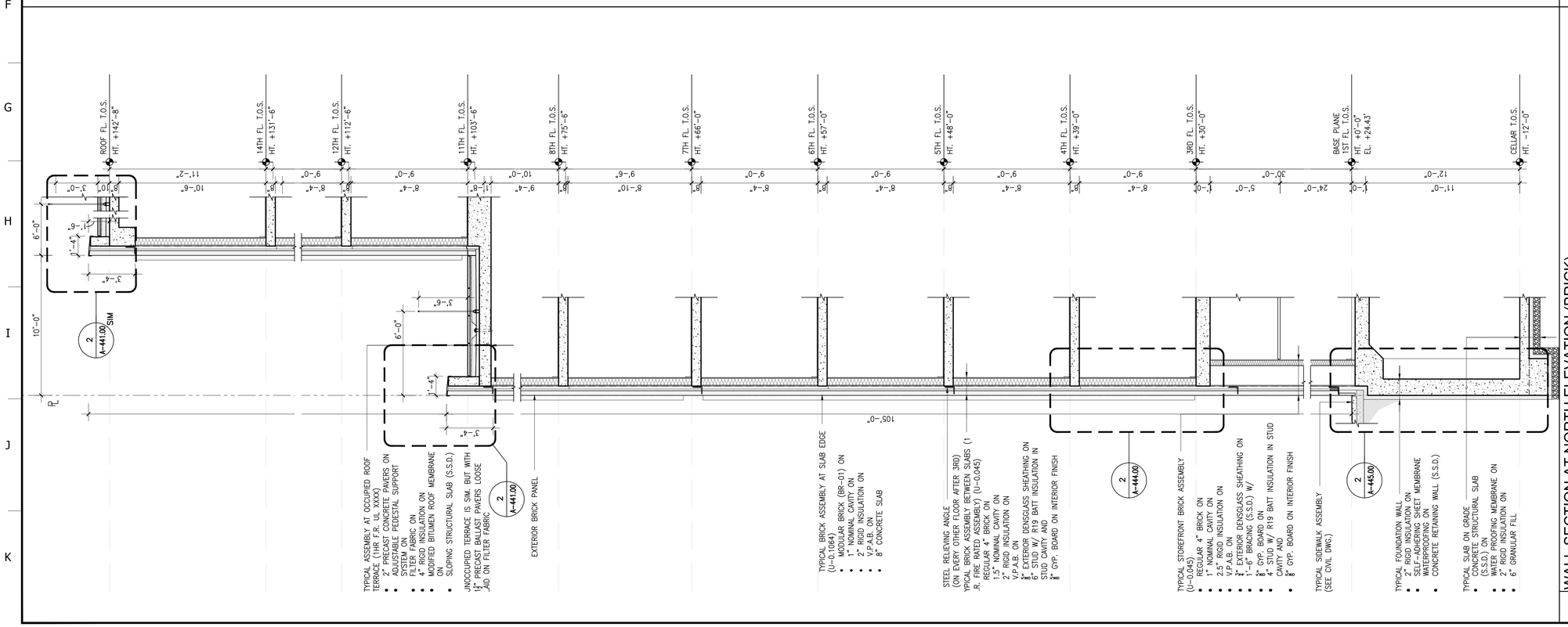

2 WALL SECTION AT NORTH ELEVATION (BRICK)
SCALE: 1/4" = 1'-0"

Client:

RANGER PROPERTIES
4790 BROADWAY
NEW YORK, NY 10034

Architect:

FOGARTY FINGER
architecture | interiors

69 Walker St, New York, NY 10013
t 212 966 7450 f 212 966 7444

Structural:

Thornton Tomasetti
51 Madison Avenue
New York, NY 10010
Tel 917.661.7800

MEP / FP:

Concessi Engineering, PC
499 7th Avenue, 11th Floor South Tower
New York, NY 10018
Tel 212.629.6810

GEOTECH:

FNA Engineering Services, PC
670 Bergen Boulevard, Floor 2
Ridgefield, NJ 07657
Tel 201.241.2444

FACADE:

Simpson Gumpertz & Heger
550 7th Avenue, 10th Floor
New York, NY 10018
Tel 212.271.7000

CODE:

Metropolis
22 Courtland Street, 10th Floor
New York, NY 10007
Tel 212.233.6344

No.	Date	Issue
02	02.06.2019	DD ESTIMATING
01	11.20.2018	SCHEMATIC DESIGN

Project:

4790 BROADWAY
NEW YORK, NY 10034

Drawing Title:

WALL SECTIONS

Seal & Signature:

DATE (MM-DD-YY): 02-05-2019
PROJECT No.:
DRAWING BY: –
CHK BY: –
DWG. No.: A-401.00
CADD FILE No.:

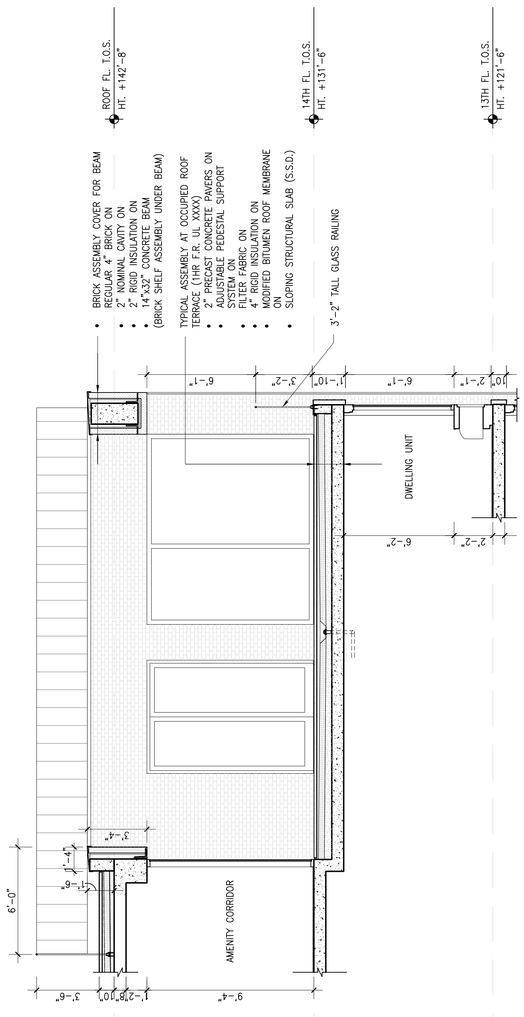

2 WALL SECTION AT 14TH FL. TERRACE

SCALE: 1/4" = 1'-0"

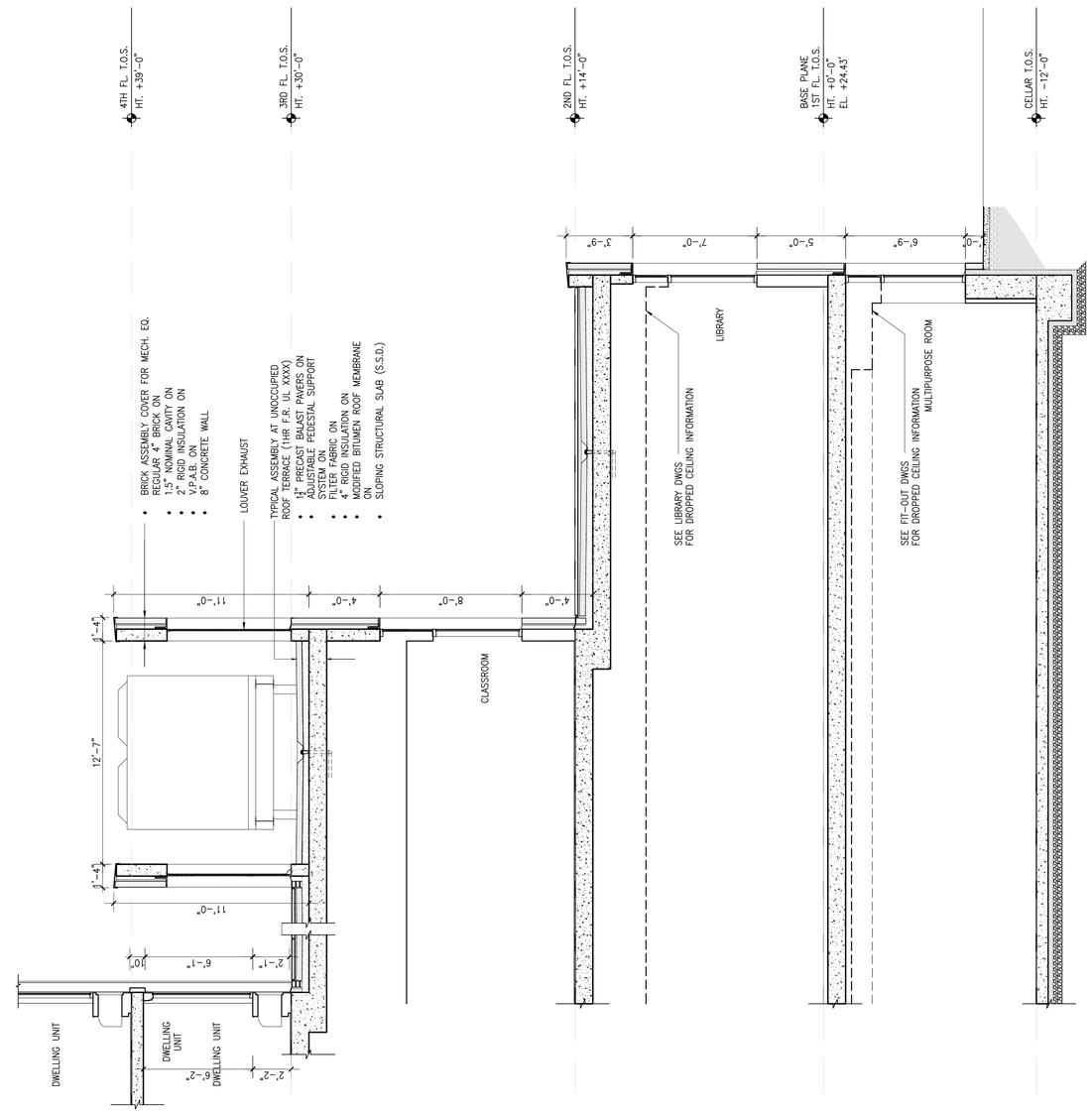

1 PARAPET AT MECHANICAL EQUIPMENT

SCALE: 1/4" = 1'-0"

Client:

RANGER PROPERTIES
4790 BROADWAY
NEW YORK, NY 10034

Architect:

FOGARTY FINGER
architecture | interiors

69 Walker St, New York, NY 10013
t 212 966 7450 f 212 966 7444

Structural:

Thornton Tomasetti
51 Madison Avenue
New York, NY 10010
Tel 917.661.7800

MEP / FP:

Concessi Engineering, PC
499 7th Avenue, 11th Floor South Tower
New York, NY 10018
Tel 212.629.6810

GEOTECH:

FNA Engineering Services, PC
670 Bergen Boulevard, Floor 2
Ridgefield, NJ 07657
Tel 201.241.2444

FACADE:

Simpson Gumpertz & Heger
550 7th Avenue, 10th Floor
New York, NY 10018
Tel 212.271.7000

CODE:

Metropolis
22 Courtland Street, 10th Floor
New York, NY 10007
Tel 212.233.6344

No.	Date	Issue
02	02.06.2019	DD ESTIMATING
01	11.20.2018	SCHEMATIC DESIGN

Project:

4790 BROADWAY
NEW YORK, NY 10034

Drawing Title:

WALL SECTIONS

Seal & Signature:

DATE (MM-DD-YY): 02-05-2019
PROJECT No.:
DRAWING BY: --
CHK BY: --
DWG. No.:
A-402.00
CADD FILE No.:

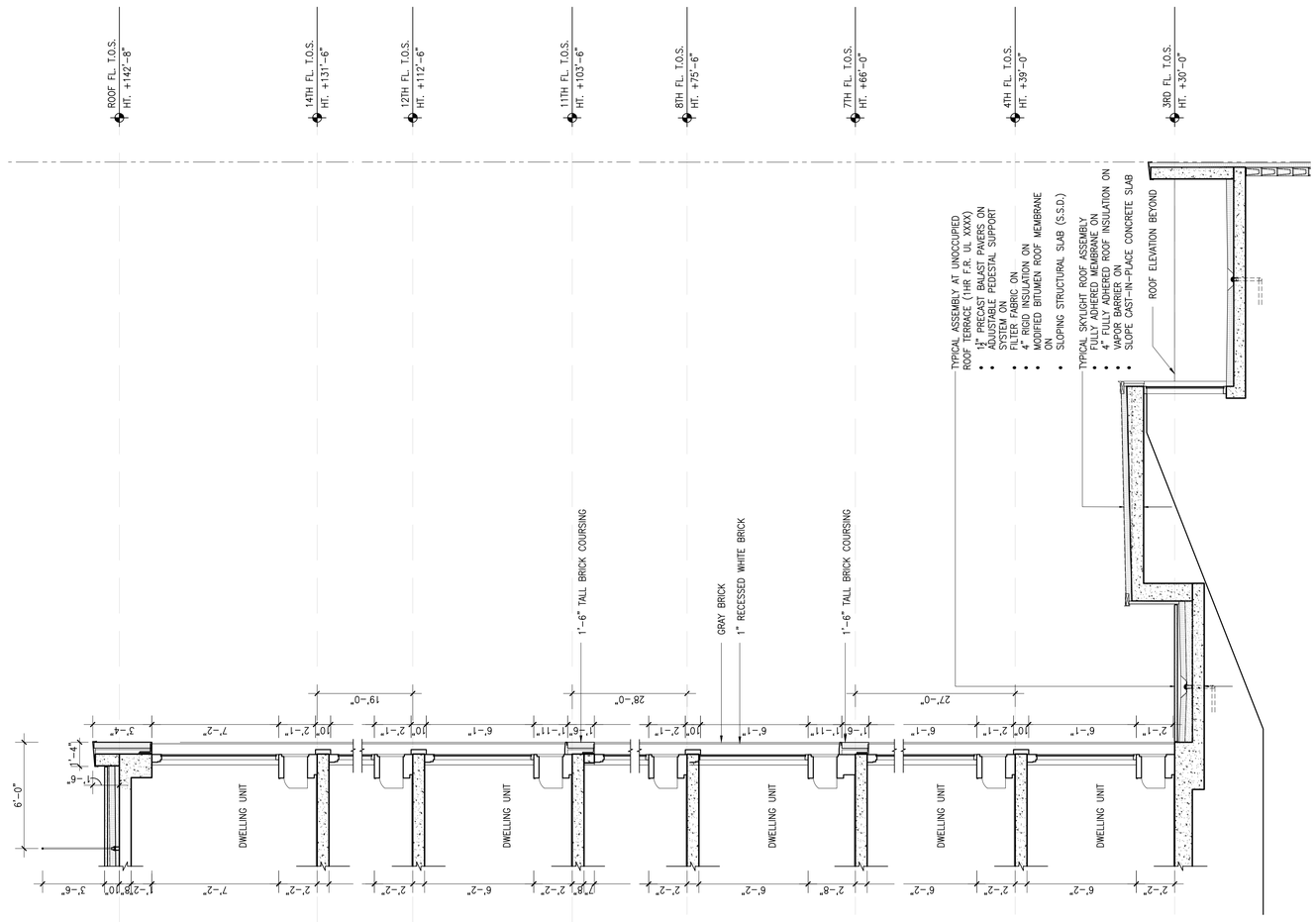

1 WALL SECTION AT SOUTH ELEVATION
SCALE: 1/4" = 1'-0"

Client:

RANGER PROPERTIES
4790 BROADWAY
NEW YORK, NY 10034

Architect:

FOGARTY FINGER
architecture | interiors

69 Walker St, New York, NY 10013
t 212 966 7450 f 212 966 7444

Structural:

Thornton Tomasetti
51 Madison Avenue
New York, NY 10010
Tel 917.661.7800

MEP / FP:

Concessi Engineering, PC
499 7th Avenue, 11th Floor South Tower
New York, NY 10018
Tel 212.629.6810

GEOTECH:

FNA Engineering Services, PC
670 Bergen Boulevard, Floor 2
Ridgefield, NJ 07657
Tel 201.241.2444

FACADE:

Simpson Gumpertz & Heger
550 7th Avenue, 10th Floor
New York, NY 10018
Tel 212.271.7000

CODE:

Metropolis
22 Courtland Street, 10th Floor
New York, NY 10007
Tel 212.233.6344

No.	Date	Issue
02	02.06.2019	DD ESTIMATING
01	11.20.2018	SCHEMATIC DESIGN

Project:

4790 BROADWAY
NEW YORK, NY 10034

Drawing Title:

WALL SECTIONS

Seal & Signature:

DATE (MM-DD-YY): 02-05-2019
PROJECT No.:
DRAWING BY: –
CHK BY: –
DWG. No.: A-403.00
CADD FILE No.:

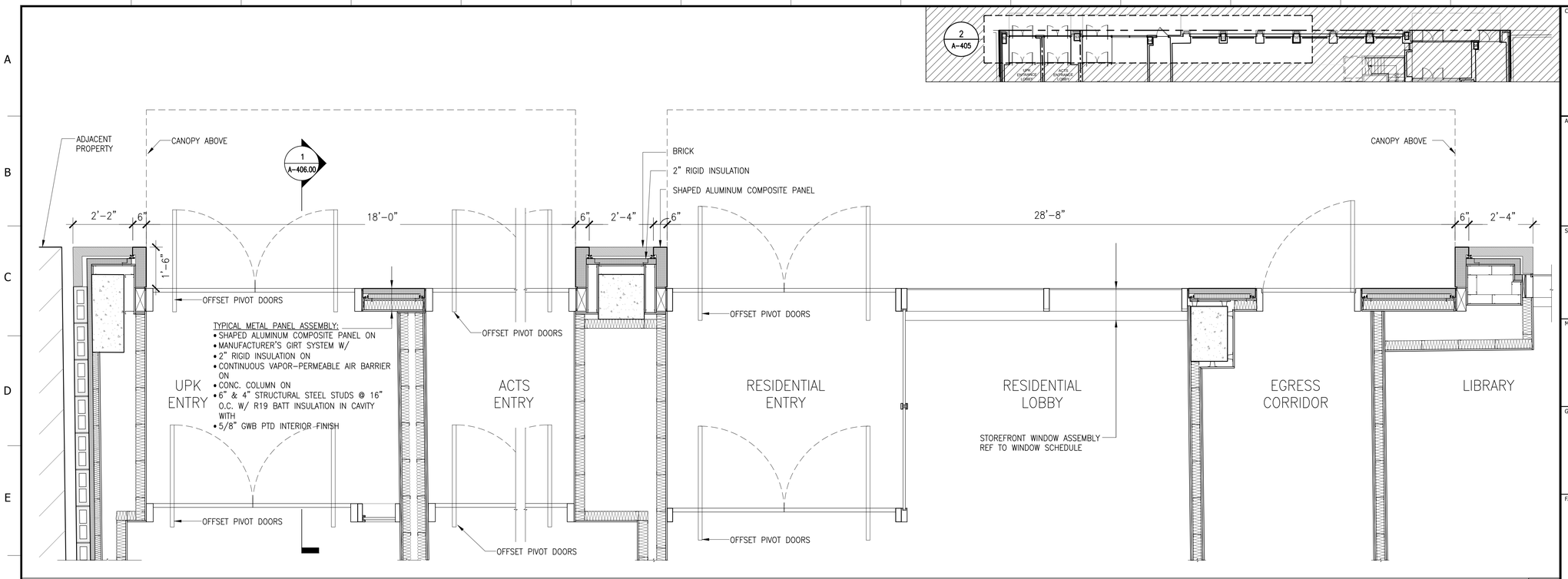

FACADE PLAN DETAIL 2

SCALE: 1/2"=1'-0"

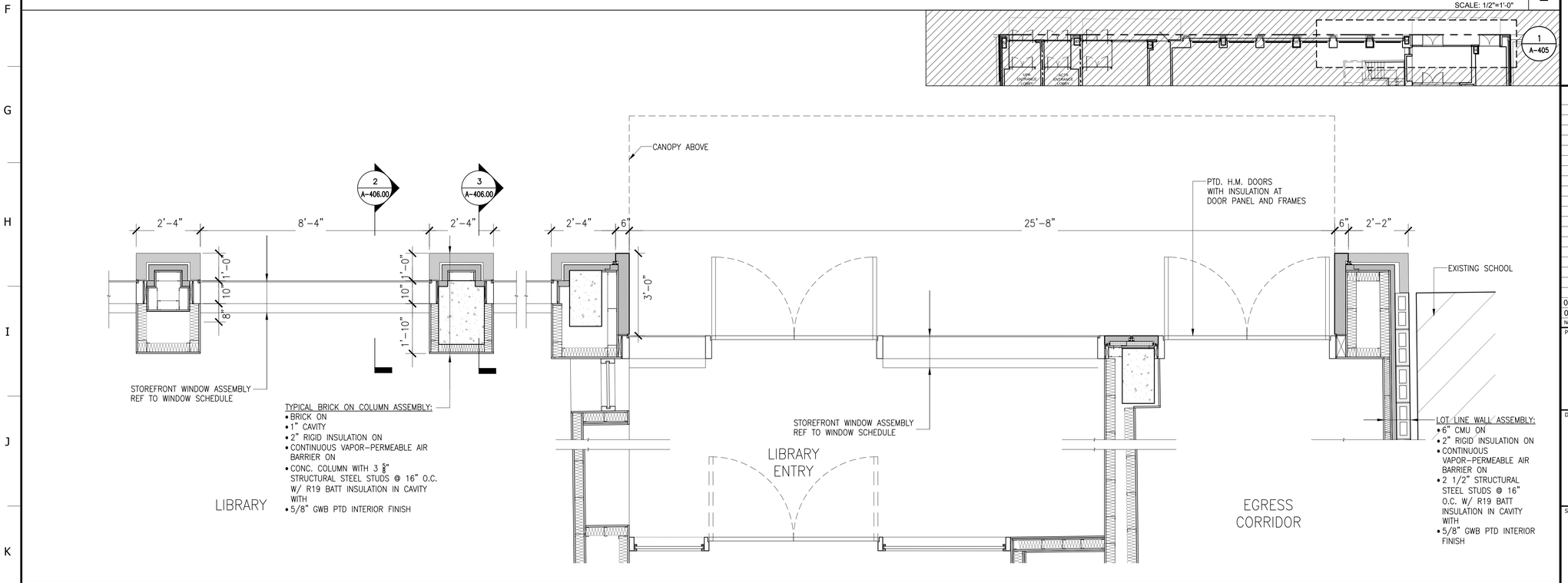

FACADE PLAN DETAIL 1

SCALE: 1/2"=1'-0"

Client:

RANGER PROPERTIES
4790 BROADWAY
NEW YORK, NY 10034

Architect:

FOGARTY FINGER
architecture | interiors

69 Walker St, New York, NY 10013
t 212 966 7450 f 212 966 7444

Structural:

Thornton Tomasetti
51 Madison Avenue
New York, NY 10010
Tel 917.661.7800

MEP / FP:

Concessi Engineering, PC
499 7th Avenue, 11th Floor South Tower
New York, NY 10018
Tel 212.629.6810

GEOTECH:

FNA Engineering Services, PC
670 Bergen Boulevard, Floor 2
Ridgefield, NJ 07657
Tel 201.241.2444

FACADE:

Simpson Gumpertz & Heger
550 7th Avenue, 10th Floor
New York, NY 10018
Tel 212.271.7000

CODE:

Metropolis
22 Courtland Street, 10th Floor
New York, NY 10007
Tel 212.233.6344

No.	Date	Issue
02	02.06.2019	DD ESTIMATING
01	11.20.2018	SCHEMATIC DESIGN

Project:

4790 BROADWAY
NEW YORK, NY 10034

Drawing Title:

STOREFRONT DETAILS

Seal & Signature:

DATE (MM-DD-YY): 02-05-2019
PROJECT No.:
DRAWING BY: --
CHK BY: --
DWG. No.: A-405.00
CADD FILE No.:

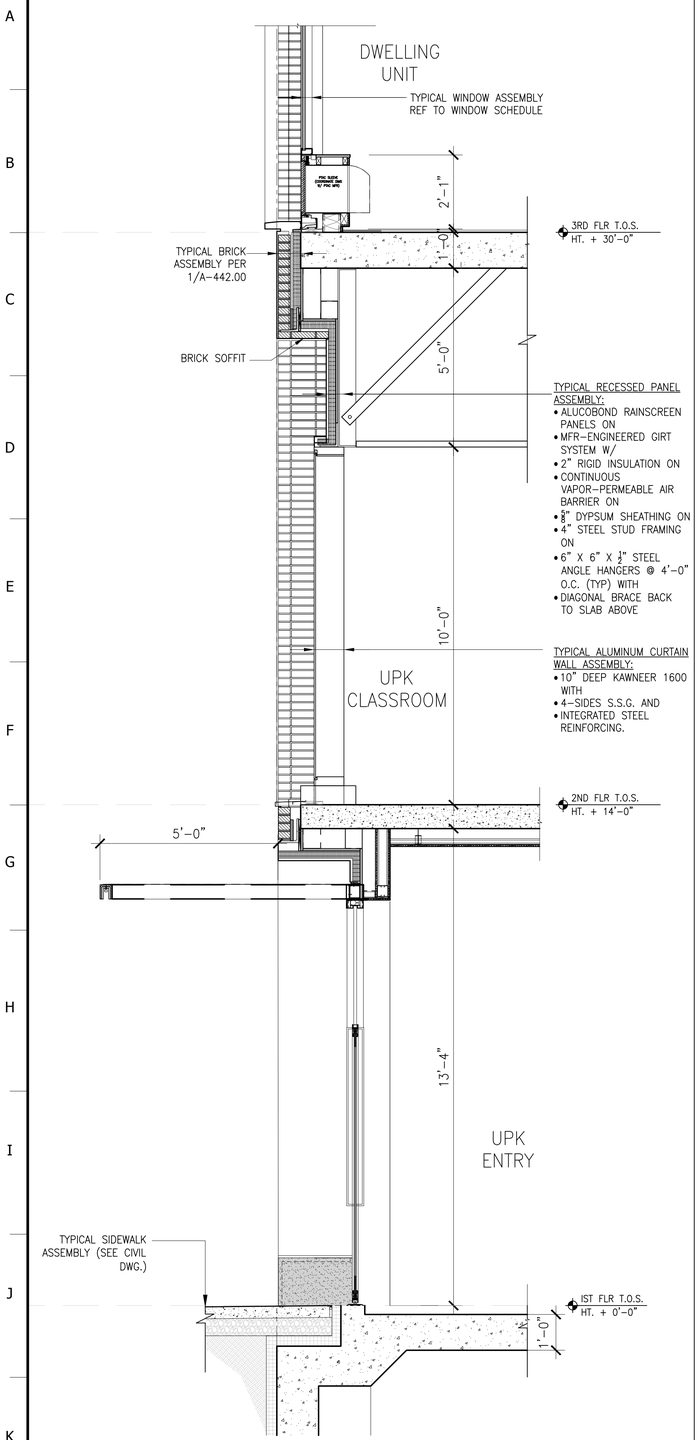

FACADE SECTION DETAIL 1
SCALE: 1/2"=1'-0"

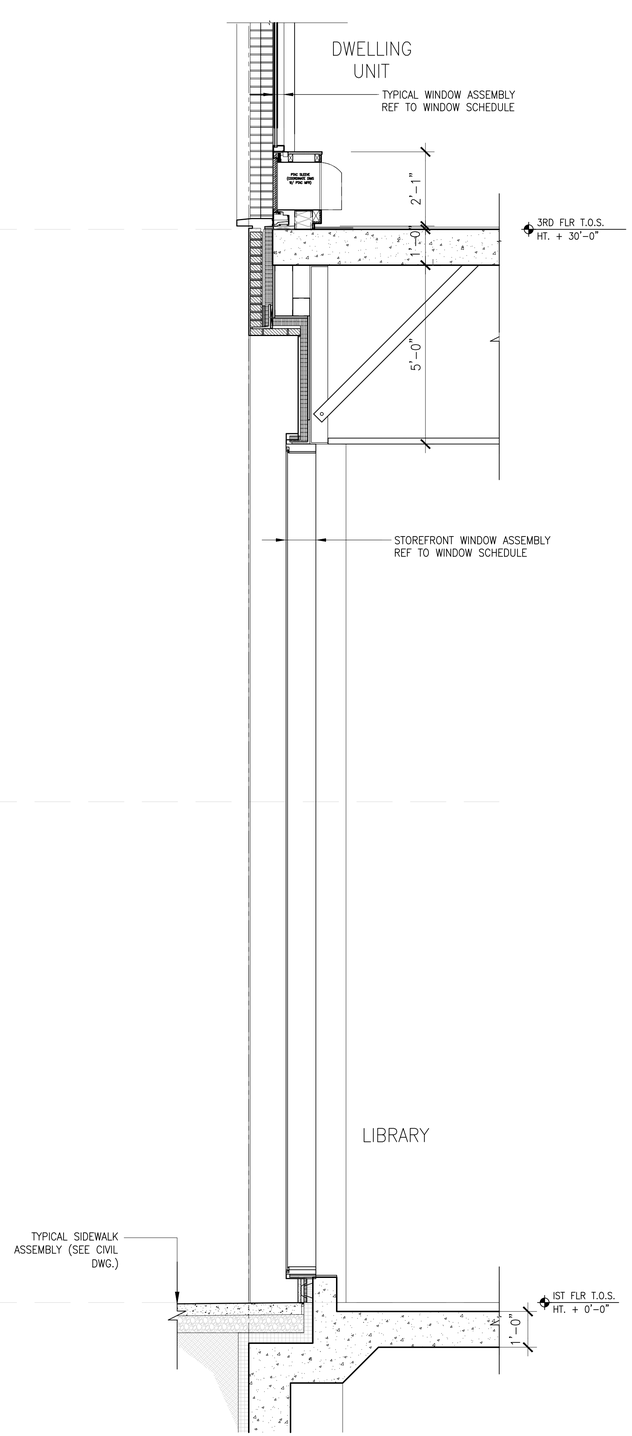

FACADE SECTION DETAIL 2
SCALE: 1/2"=1'-0"

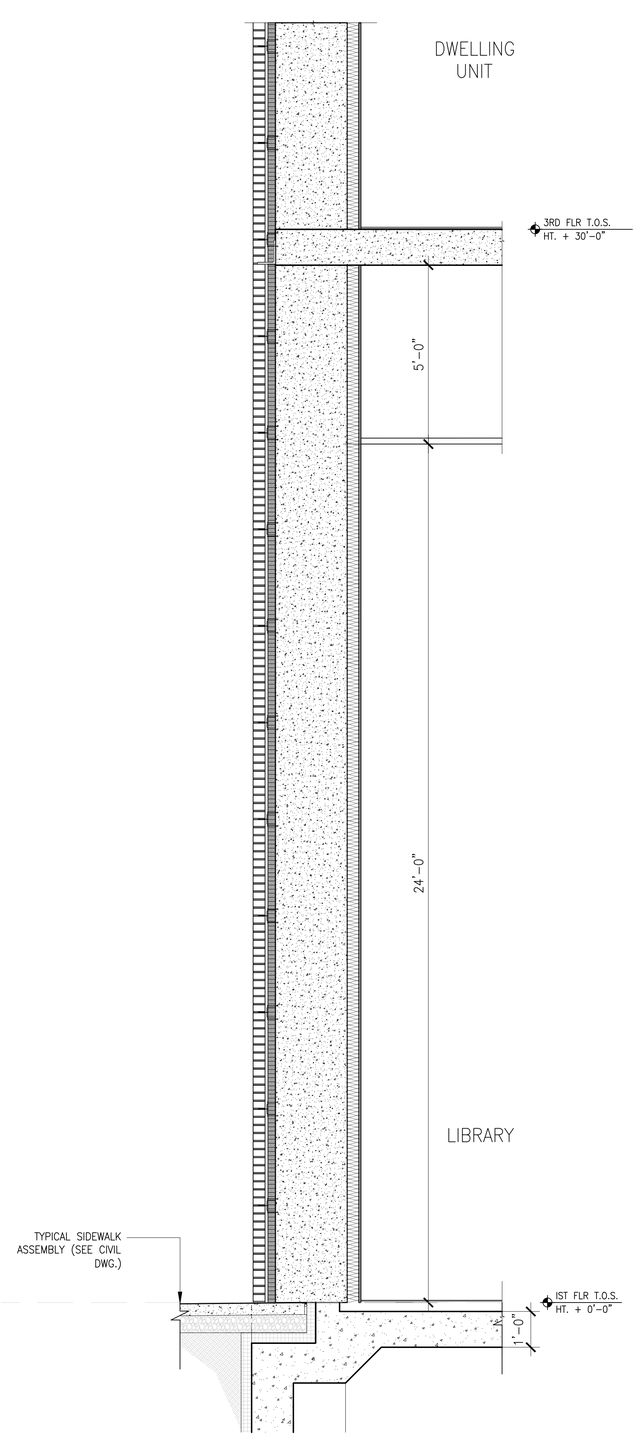

FACADE SECTION DETAIL 3
SCALE: 1/2"=1'-0"

Client:

RANGER PROPERTIES
4790 BROADWAY
NEW YORK, NY 10034

Architect:

FOGARTY FINGER
architecture | interiors

69 Walker St, New York, NY 10013
t 212 966 7450 f 212 966 7444

Structural:

Thornton Tomasetti
51 Madison Avenue
New York, NY 10010
Tel 917.661.7800

MEP / FP:

Concessi Engineering, PC
499 7th Avenue, 11th Floor South Tower
New York, NY 10018
Tel 212.629.6810

GEOTECH:

FNA Engineering Services, PC
670 Bergen Boulevard, Floor 2
Ridgefield, NJ 07657
Tel 201.241.2444

FACADE:

Simpson Gumpertz & Heger
550 7th Avenue, 10th Floor
New York, NY 10018
Tel 212.271.7000

CODE:

Metropolis
22 Courtland Street, 10th Floor
New York, NY 10007
Tel 212.233.6344

No.	Date	Issue
02	02.06.2019	DD ESTIMATING
01	11.20.2018	SCHEMATIC DESIGN

Project:

4790 BROADWAY
NEW YORK, NY 10034

Drawing Title:

STOREFRONT DETAILS

Seal & Signature:

DATE (MM-DD-YY): 02-05-2019
PROJECT No.:
DRAWING BY: --
CHK BY: --
DWG. No.: A-406.00
CADD FILE No.:

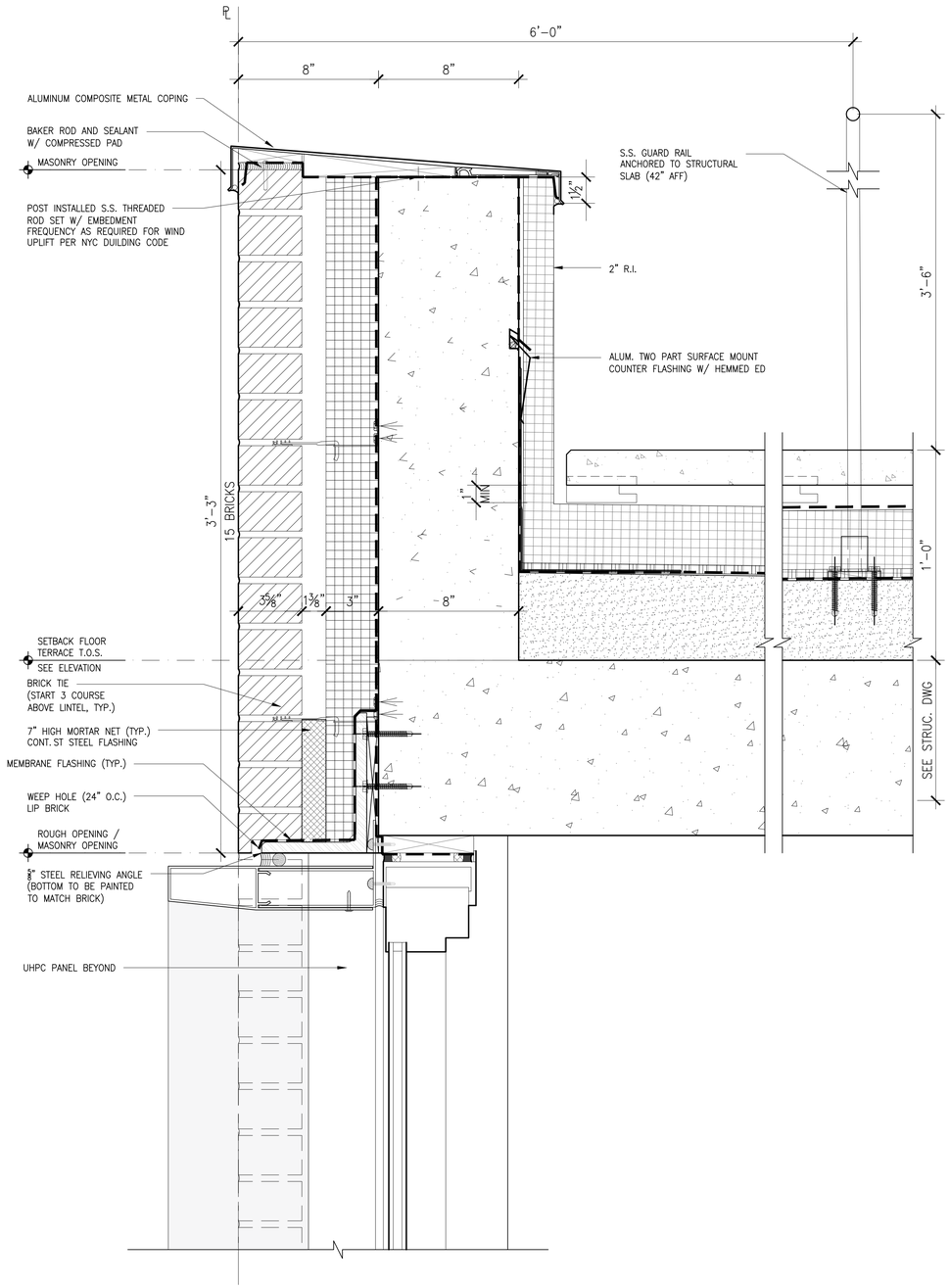

1 PARAPET DETAIL @ 11TH FLOOR TERRACE SETBACK

SCALE: 3" = 1'-0"

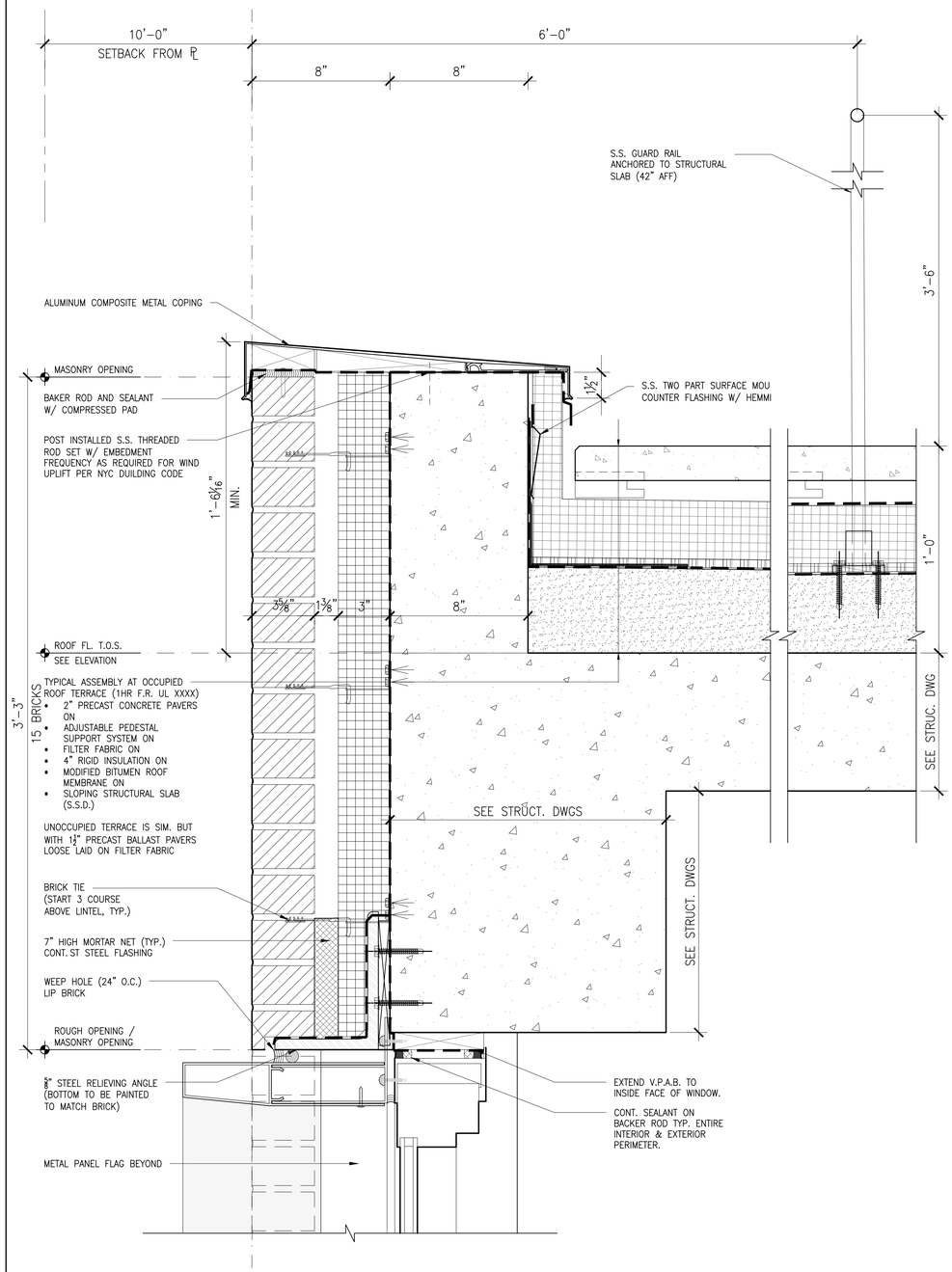

2 ROOF PARAPET DETAIL

SCALE: 3" = 1'-0"

Client:

RANGER PROPERTIES
4790 BROADWAY
NEW YORK, NY 10034

Architect:

FOGARTY FINGER
architecture | interiors

69 Walker St, New York, NY 10013
t 212 966 7450 f 212 966 7444

Structural:

Thornton Tomasetti
51 Madison Avenue
New York, NY 10010
Tel 917.661.7800

MEP / FP:

Concessi Engineering, PC
499 7th Avenue, 11th Floor South Tower
New York, NY 10018
Tel 212.629.6810

GEOTECH:

FNA Engineering Services, PC
670 Bergen Boulevard, Floor 2
Ridgefield, NJ 07657
Tel 201.241.2444

FACADE:

Simpson Gumpertz & Heger
550 7th Avenue, 10th Floor
New York, NY 10018
Tel 212.271.7000

CODE:

Metropolis
22 Courtland Street, 10th Floor
New York, NY 10007
Tel 212.233.6344

No.	Date	Issue
02	02.06.2019	DD ESTIMATING
01	11.20.2018	SCHEMATIC DESIGN

Project:

4790 BROADWAY
NEW YORK, NY 10034

Drawing Title:

EXTERIOR WALL DETAILS

Seal & Signature:

DATE (MM-DD-YY): 02-05-2019
PROJECT No.:
DRAWING BY: –
CHK BY: –
DWG. No.: A-441.00
CADD FILE No.:

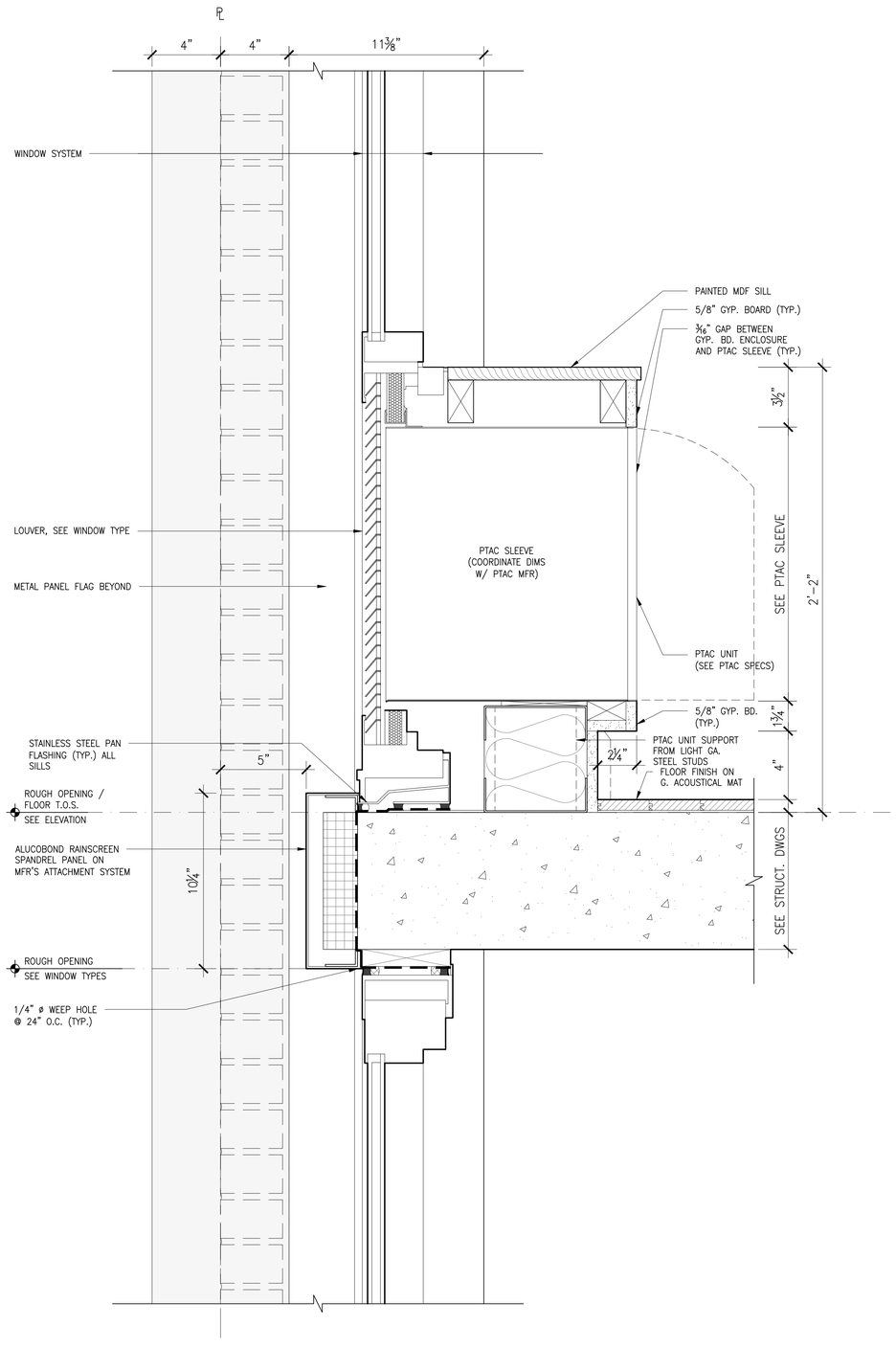

1 METAL PANEL SPENDREL DETAIL @ WINDOW W/ PTAC

SCALE: 3" = 1'-0"

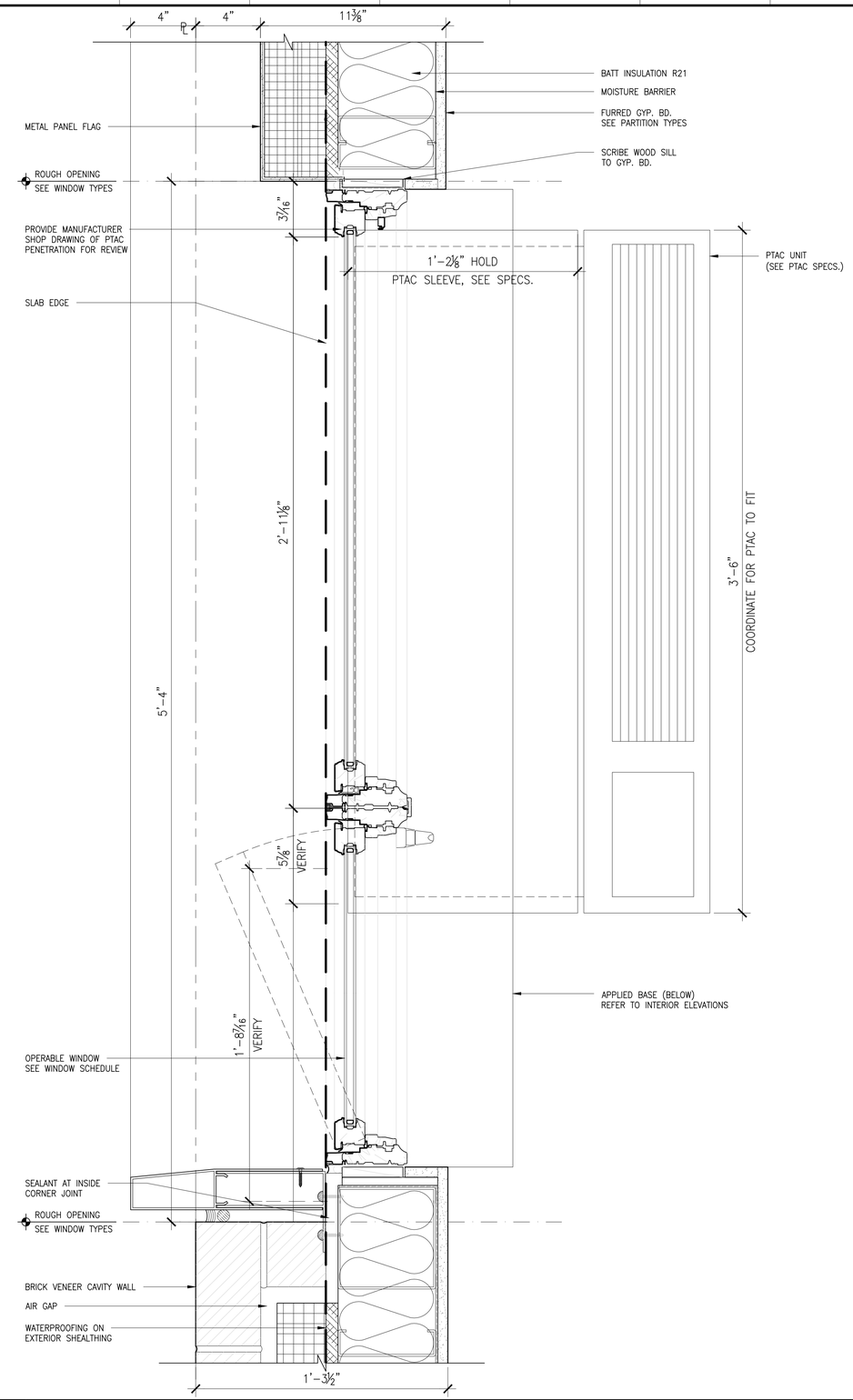

2 PTAC ENCLOSER PLAN DETAIL

SCALE: 3" = 1'-0"

Client:

RANGER PROPERTIES
4790 BROADWAY
NEW YORK, NY 10034

Architect:

FOGARTY FINGER
architecture | interiors

69 Walker St, New York, NY 10013
t 212 966 7450 f 212 966 7444

Structural:

Thornton Tomasetti
51 Madison Avenue
New York, NY 10010
Tel 917.661.7800

MEP / FP:

Concessi Engineering, PC
499 7th Avenue, 11th Floor South Tower
New York, NY 10018
Tel 212.629.6810

GEOTECH:

FNA Engineering Services, PC
670 Bergen Boulevard, Floor 2
Ridgefield, NJ 07657
Tel 201.241.2444

FACADE:

Simpson Gumpertz & Heger
550 7th Avenue, 10th Floor
New York, NY 10018
Tel 212.271.7000

CODE:

Metropolis
22 Courtland Street, 10th Floor
New York, NY 10007
Tel 212.233.6344

No.	Date	Issue
02	02.06.2019	DD ESTIMATING
01	11.20.2018	SCHEMATIC DESIGN

Project:

4790 BROADWAY
NEW YORK, NY 10034

Drawing Title:

EXTETIOR WALL DETAILS

Seal & Signature:

DATE (MM-DD-YY): 02-05-2019
PROJECT No.:
DRAWING BY: –
CHK BY: –
DWG. No.: A-442.00
CADD FILE No.:

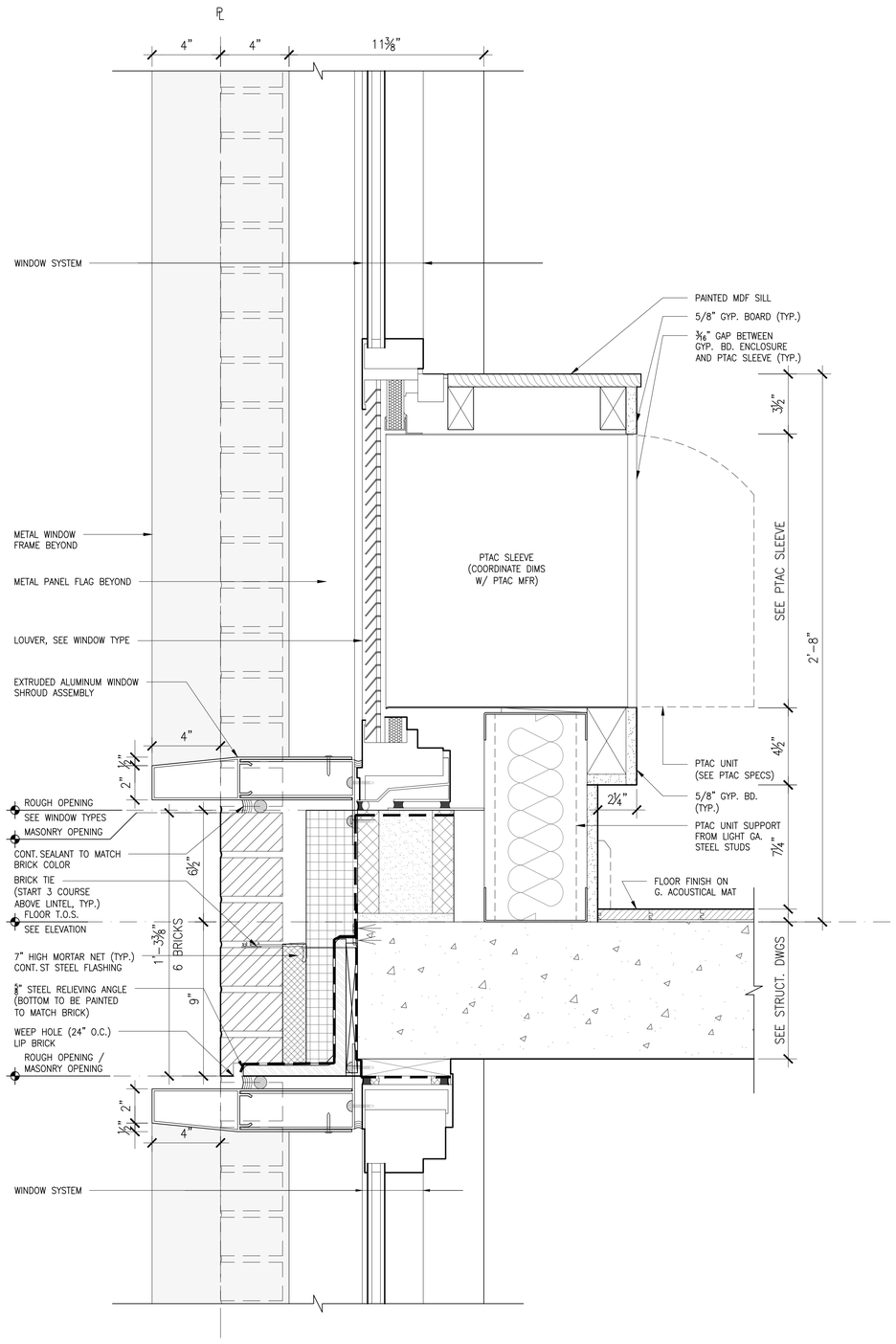

1 BRICK SPENDREL DETAIL @ WINDOW W/ PTAC

SCALE: 3" = 1'-0"

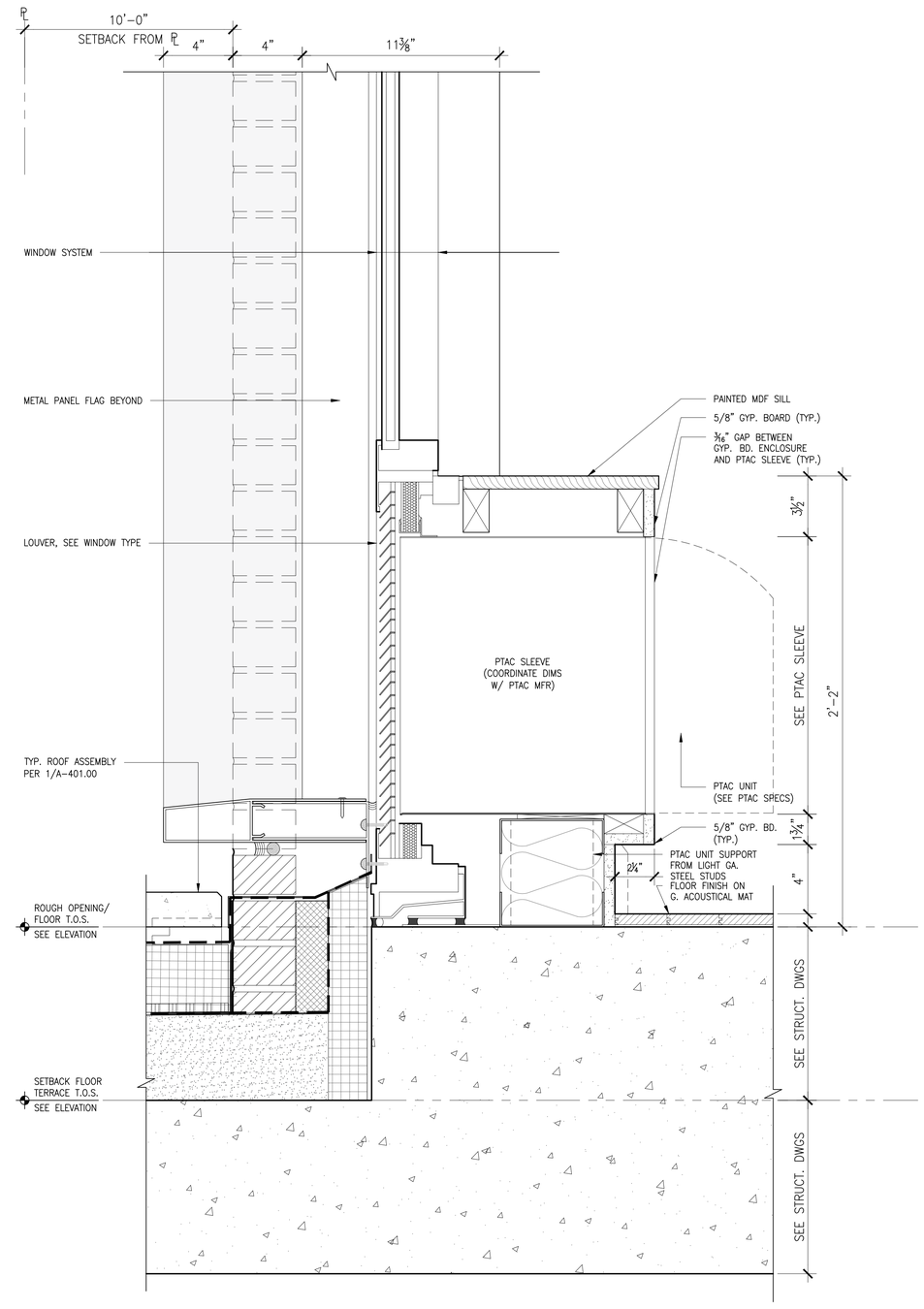

2 TERRACE SILL DETAIL @ WINDOW W/ PTAC

SCALE: 3" = 1'-0"

Client:

RANGER PROPERTIES
4790 BROADWAY
NEW YORK, NY 10034

Architect:

FOGARTY FINGER
architecture | interiors

69 Walker St, New York, NY 10013
t 212 966 7450 f 212 966 7444

Structural:

Thornton Tomasetti
51 Madison Avenue
New York, NY 10010
Tel 917.661.7800

MEP / FP:

Concessi Engineering, PC
499 7th Avenue, 11th Floor South Tower
New York, NY 10018
Tel 212.629.6810

GEOTECH:

FNA Engineering Services, PC
670 Bergen Boulevard, Floor 2
Ridgefield, NJ 07657
Tel 201.241.2444

FACADE:

Simpson Gumpertz & Heger
550 7th Avenue, 10th Floor
New York, NY 10018
Tel 212.271.7000

CODE:

Metropolis
22 Courtland Street, 10th Floor
New York, NY 10007
Tel 212.233.6344

No.	Date	Issue
02	02.06.2019	DD ESTIMATING
01	11.20.2018	SCHEMATIC DESIGN

Project:

4790 BROADWAY
NEW YORK, NY 10034

Drawing Title:

EXTETIOR WALL DETAILS

Seal & Signature:

DATE (MM-DD-YY): 02-05-2019
PROJECT No.:
DRAWING BY: –
CHK BY: –
DWG. No.: A-443.00
CADD FILE No.:

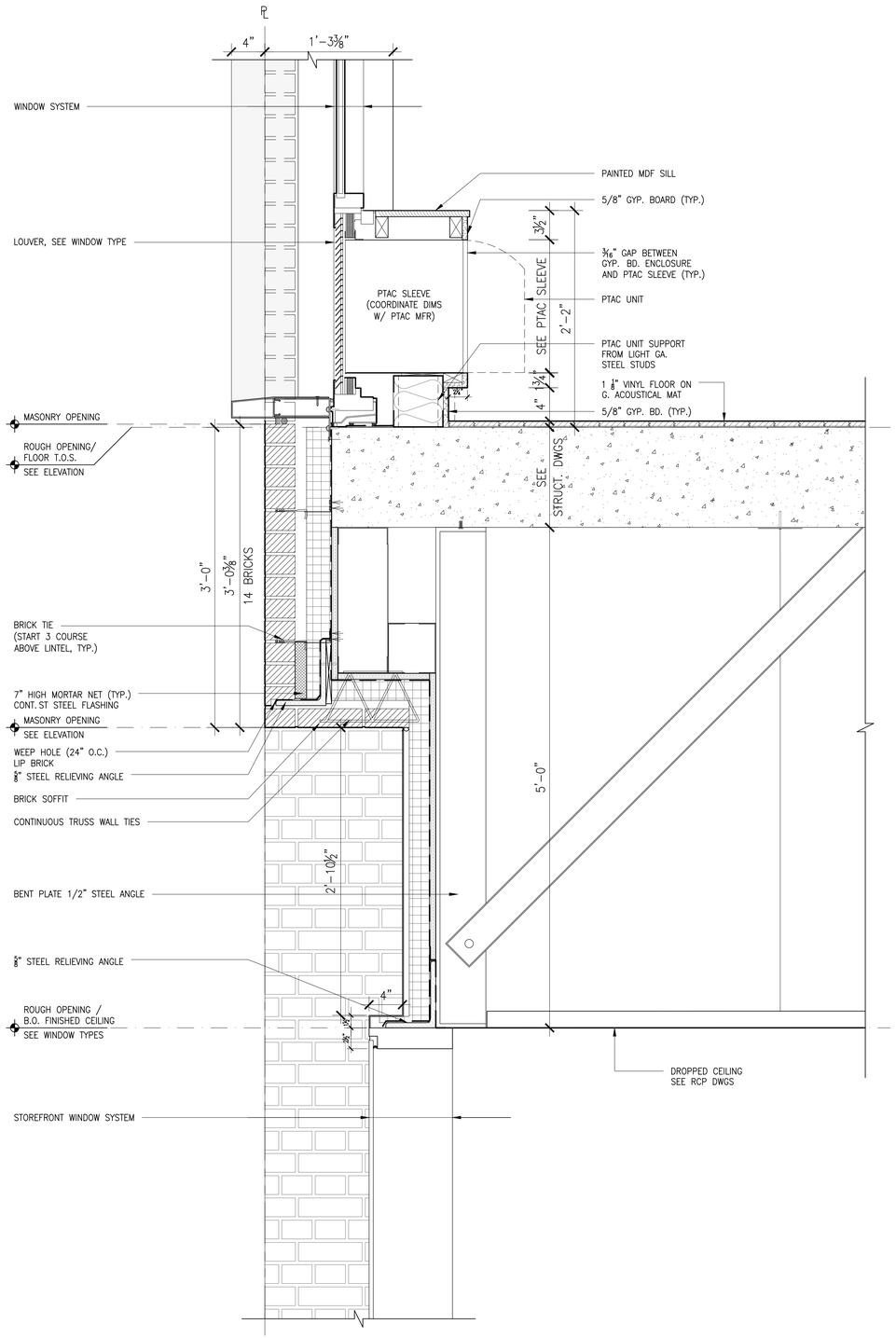

1 TYP. STOREFRONT METAL PANEL SPENDREL DETAIL

SCALE: 1 1/2" = 1'-0"

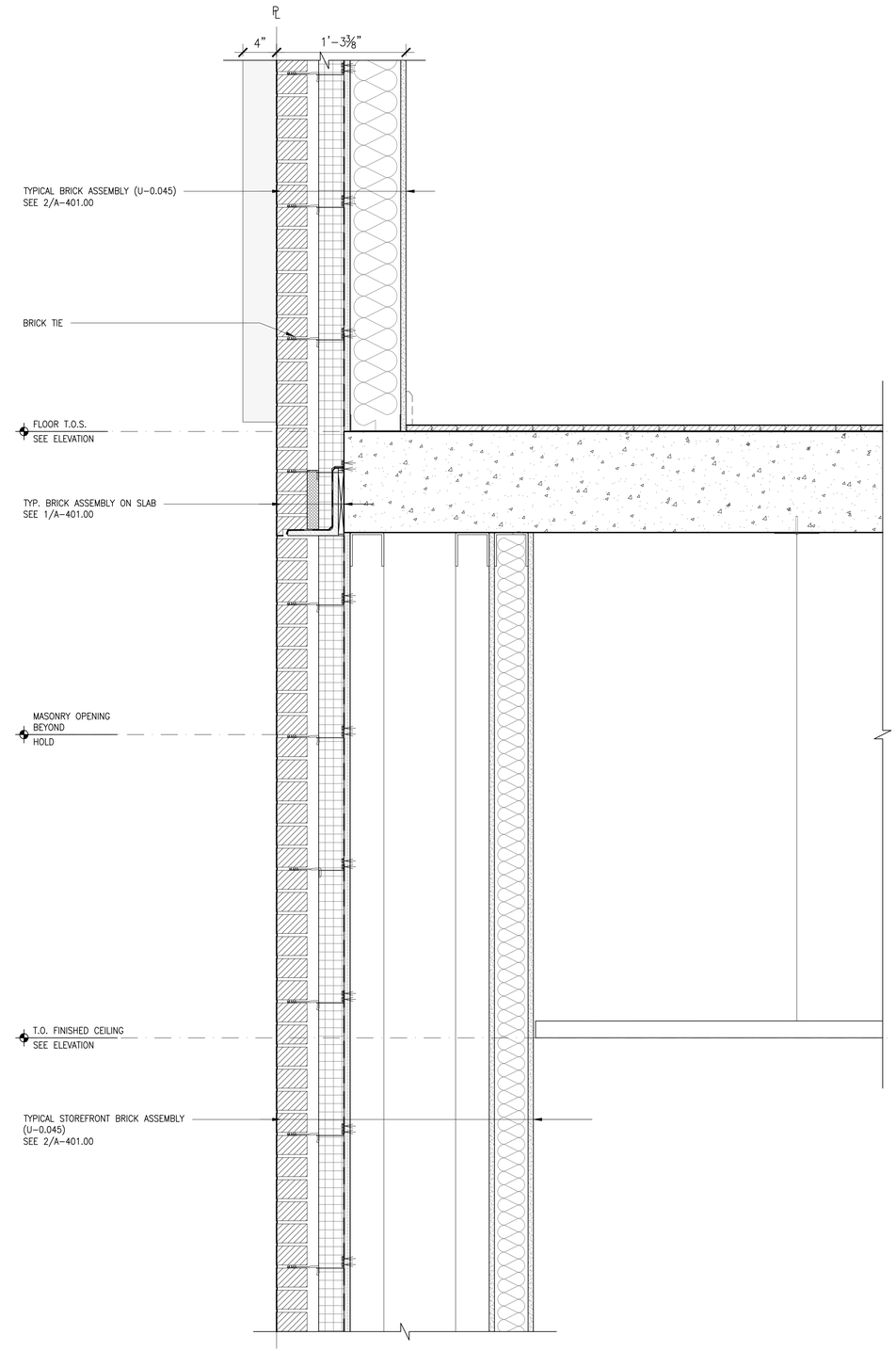

2 TYP. STOREFRONT BRICK ASSEMBLY DETAIL

SCALE: 1 1/2" = 1'-0"

Client:

RANGER PROPERTIES
4790 BROADWAY
NEW YORK, NY 10034

Architect:

FOGARTY FINGER
architecture | interiors

69 Walker St, New York, NY 10013
t 212 966 7450 f 212 966 7444

Structural:

Thornton Tomasetti
51 Madison Avenue
New York, NY 10010
Tel 917.661.7800

MEP / FP:

Concessi Engineering, PC
499 7th Avenue, 11th Floor South Tower
New York, NY 10018
Tel 212.629.6810

GEOTECH:

FNA Engineering Services, PC
670 Bergen Boulevard, Floor 2
Ridgefield, NJ 07657
Tel 201.241.2444

FACADE:

Simpson Gumpertz & Heger
550 7th Avenue, 10th Floor
New York, NY 10018
Tel 212.271.7000

CODE:

Metropolis
22 Courtland Street, 10th Floor
New York, NY 10007
Tel 212.233.6344

No.	Date	Issue
02	02.06.2019	DD ESTIMATING
01	11.20.2018	SCHEMATIC DESIGN

Project:

4790 BROADWAY
NEW YORK, NY 10034

Drawing Title:

EXTETIOR WALL DETAILS

Seal & Signature:

DATE (MM-DD-YY): 02-05-2019
PROJECT No.:
DRAWING BY: –
CHK BY: –
DWG. No.: A-444.00
CADD FILE No.:

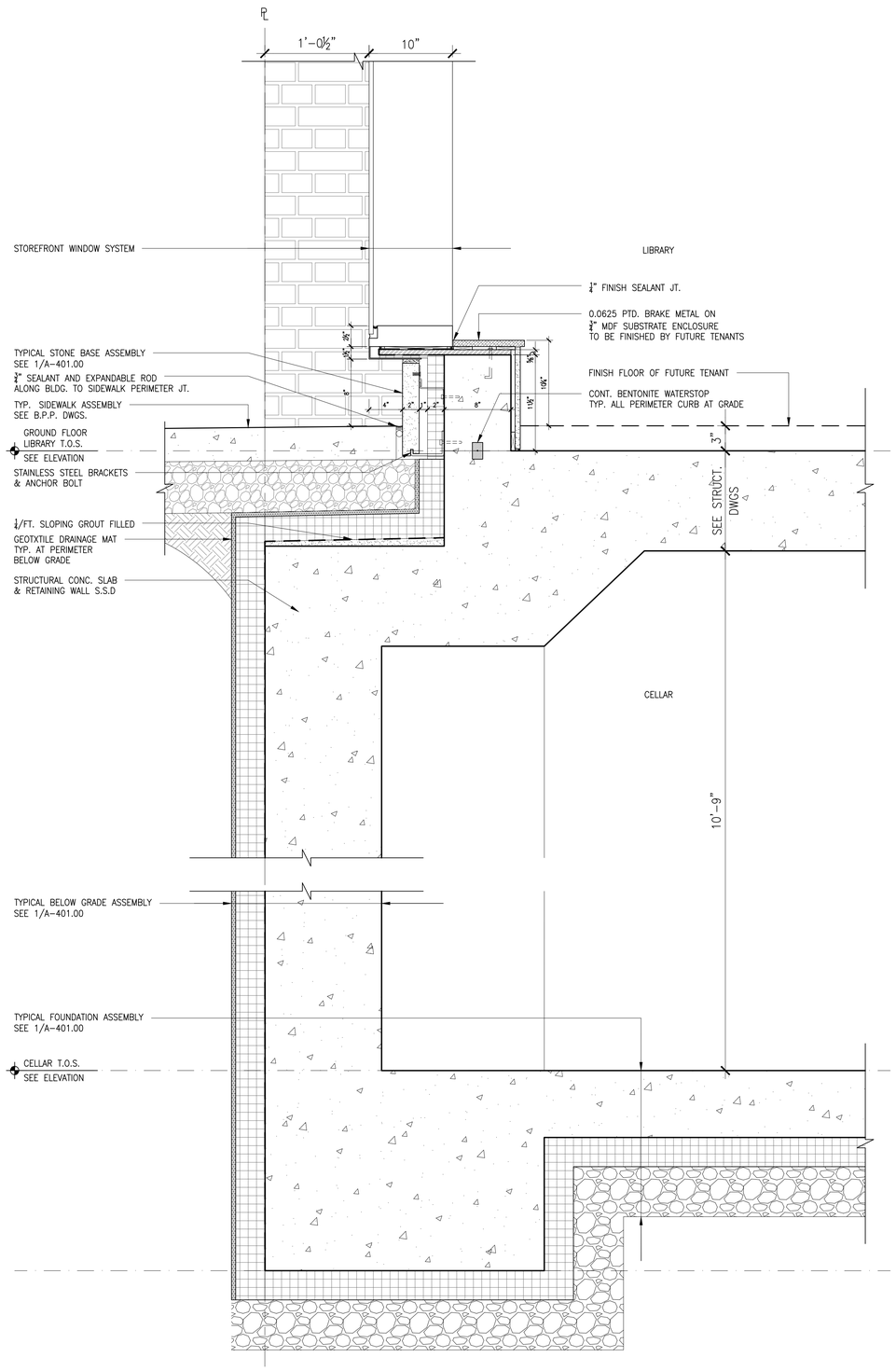

1 TYP. STOREFRONT WINDOW BASE

SCALE: 1 1/2" = 1'-0"

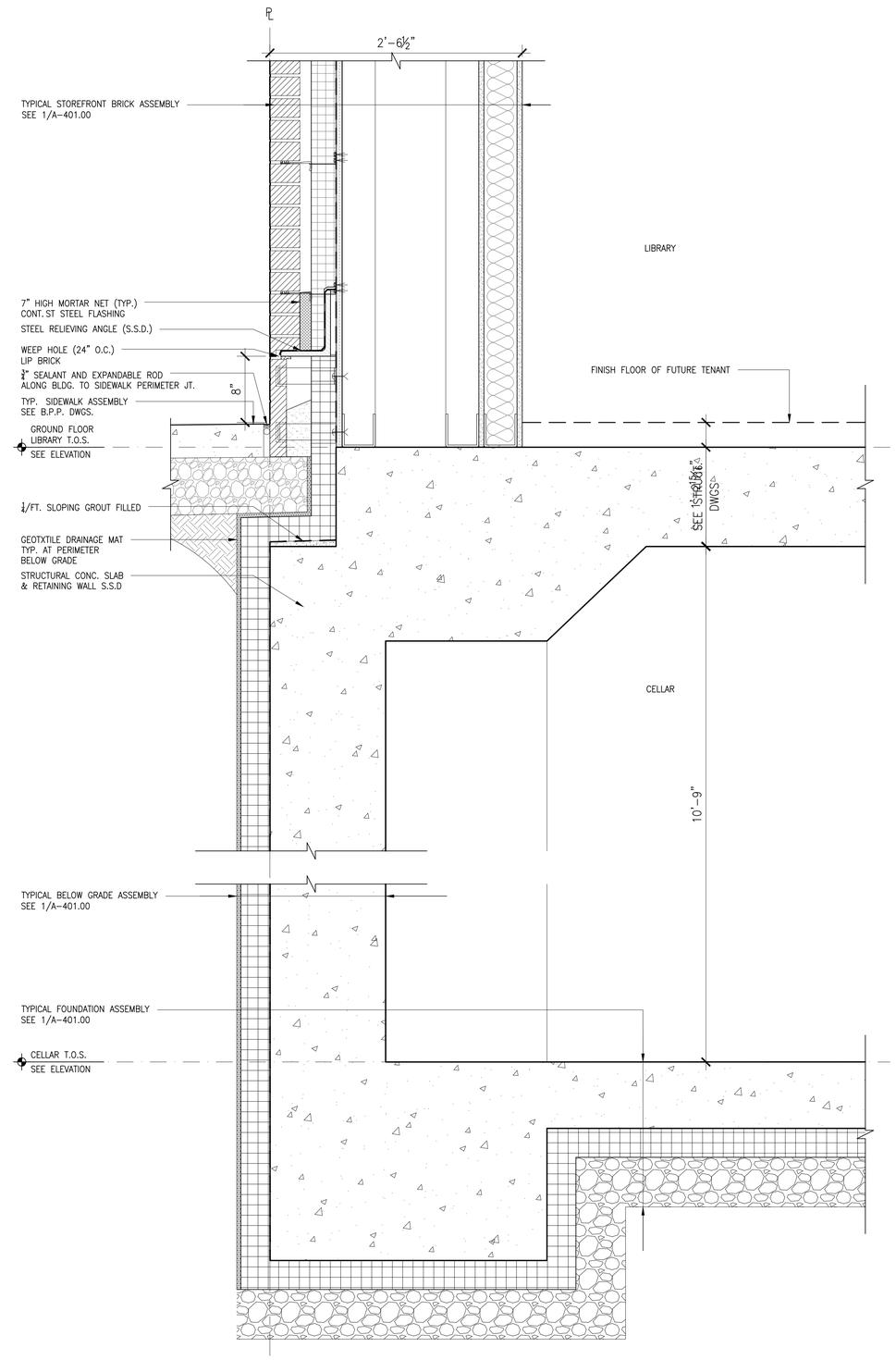

2 TYP. EXTERIOR WALL BRICK BASE

SCALE: 1 1/2" = 1'-0"

Client:

RANGER PROPERTIES
4790 BROADWAY
NEW YORK, NY 10034

Architect:

FOGARTY FINGER
architecture | interiors

69 Walker St, New York, NY 10013
t 212 966 7450 f 212 966 7444

Structural:

Thornton Tomasetti
51 Madison Avenue
New York, NY 10010
Tel 917.661.7800

MEP / FP:

Concessi Engineering, PC
499 7th Avenue, 11th Floor South Tower
New York, NY 10018
Tel 212.629.6810

GEOTECH:

FNA Engineering Services, PC
670 Bergen Boulevard, Floor 2
Ridgefield, NJ 07657
Tel 201.241.2444

FACADE:

Simpson Gumpertz & Heger
550 7th Avenue, 10th Floor
New York, NY 10018
Tel 212.271.7000

CODE:

Metropolis
22 Courtland Street, 10th Floor
New York, NY 10007
Tel 212.233.6344

No.	Date	Issue
02	02.06.2019	DD ESTIMATING
01	11.20.2018	SCHEMATIC DESIGN

Project:

4790 BROADWAY
NEW YORK, NY 10034

Drawing Title:

EXTETIOR WALL DETAILS

Seal & Signature:

DATE (MM-DD-YY): 02-05-2019
PROJECT No.:
DRAWING BY: –
CHK BY: –
DWG. No.: A-445.00
CADD FILE No.:

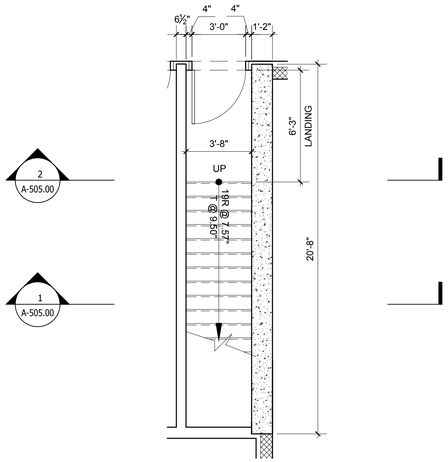

1 EGRESS STAIR B: CELLAR FLOOR
SCALE: 1/4"=1'-0"

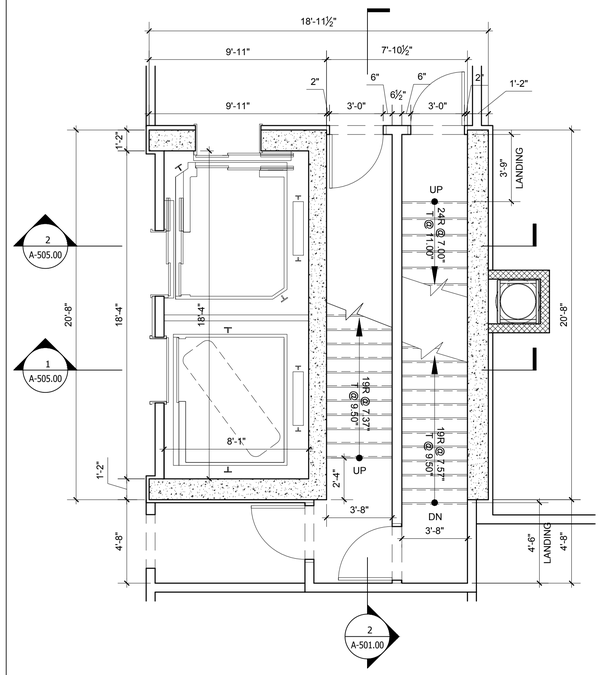

2 EGRESS STAIR A&B: 1ST FLOOR
SCALE: 1/4"=1'-0"

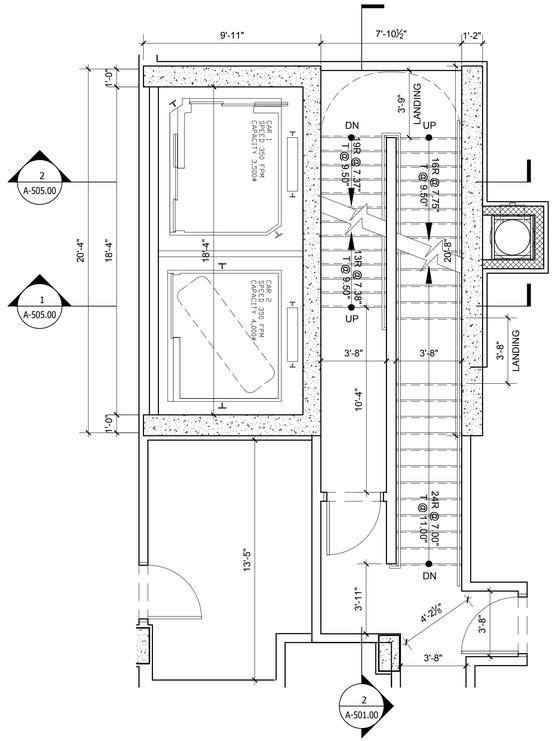

3 EGRESS STAIR A&B: 2ND FLOOR
SCALE: 1/4"=1'-0"

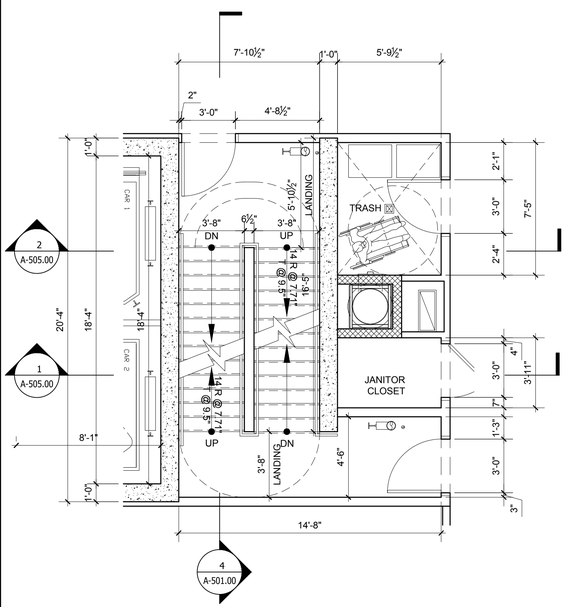

4 EGRESS STAIR A&B: FLOORS 3-9, 11, & 12
SCALE: 1/4"=1'-0"

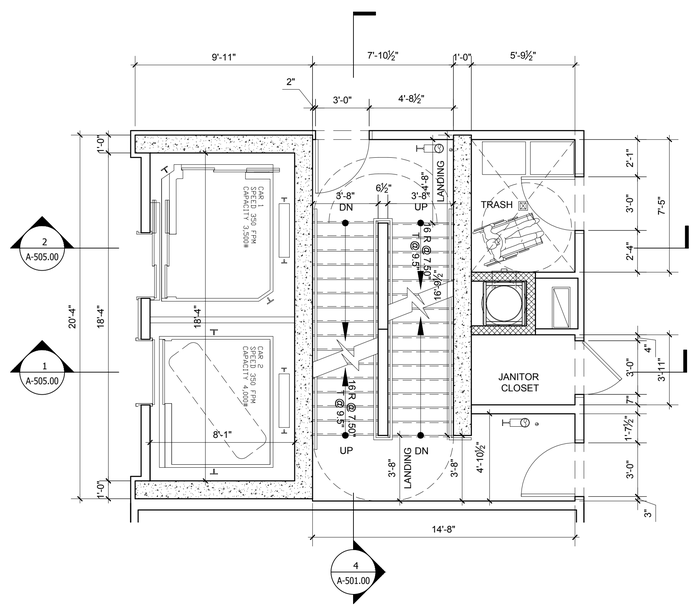

5 EGRESS STAIR A&B: 10TH & 13TH FLOORS
SCALE: 1/4"=1'-0"

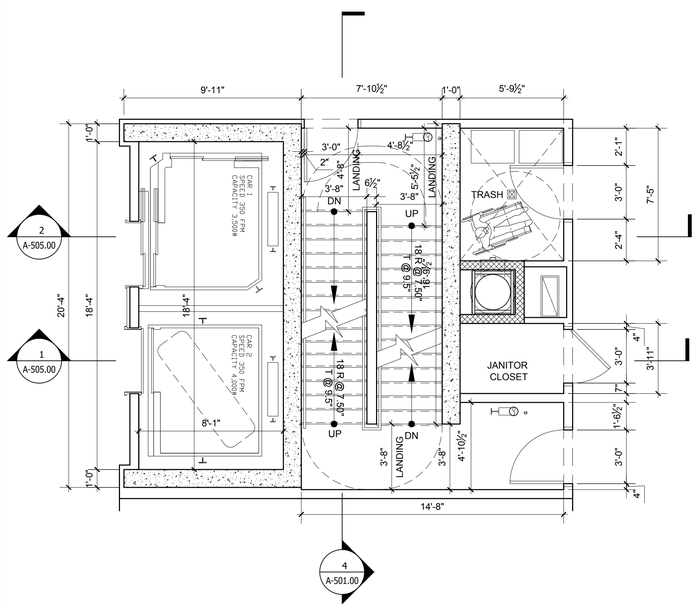

6 EGRESS STAIR A&B: 14TH FLOOR
SCALE: 1/4"=1'-0"

Client:

RANGER PROPERTIES
4790 BROADWAY
NEW YORK, NY 10034

Architect:

FOGARTY FINGER
architecture | interiors

69 Walker St, New York, NY 10013
t 212 966 7450 f 212 966 7444

Structural:

Thornton Tomasetti
51 Madison Avenue
New York, NY 10010
Tel 917.661.7800

MEP / FP:

Concessi Engineering, PC
499 7th Avenue, 11th Floor South Tower
New York, NY 10018
Tel 212.629.6810

GEOTECH:

FNA Engineering Services, PC
670 Bergen Boulevard, Floor 2
Ridgefield, NJ 07657
Tel 201.241.2444

FACADE:

Simpson Gumpertz & Heger
550 7th Avenue, 10th Floor
New York, NY 10018
Tel 212.271.7000

CODE:

Metropolis
22 Courtland Street, 10th Floor
New York, NY 10007
Tel 212.233.6344

No.	Date	Issue
02	02.06.2019	DD ESTIMATING
01	11.20.2018	SCHEMATIC DESIGN

Project:

4790 BROADWAY
NEW YORK, NY 10034

Drawing Title:

ENLARGED CORE & STAIR PLAN II

Seal & Signature:

DATE (MM-DD-YY): 02-05-2019
PROJECT No.:
DRAWING BY: --
CHK BY: --
DWG. No.: A-500.00
CADD FILE No.:

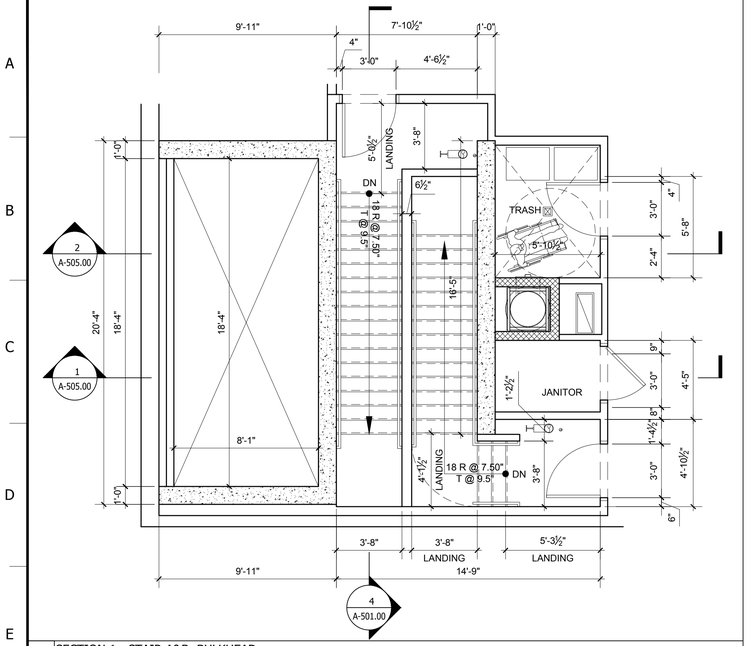

1 SECTION 1 - STAIR A&B: BULKHEAD
SCALE: 1/4"=1'-0"

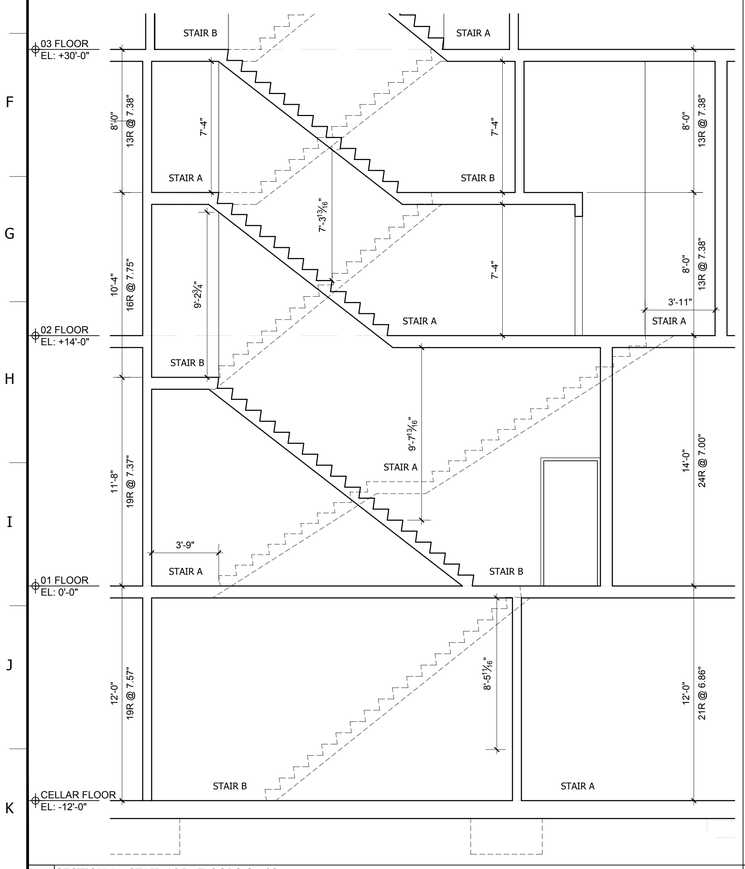

2 SECTION 1 - STAIR A&B: FLOORS C - 03
SCALE: 1/4"=1'-0"

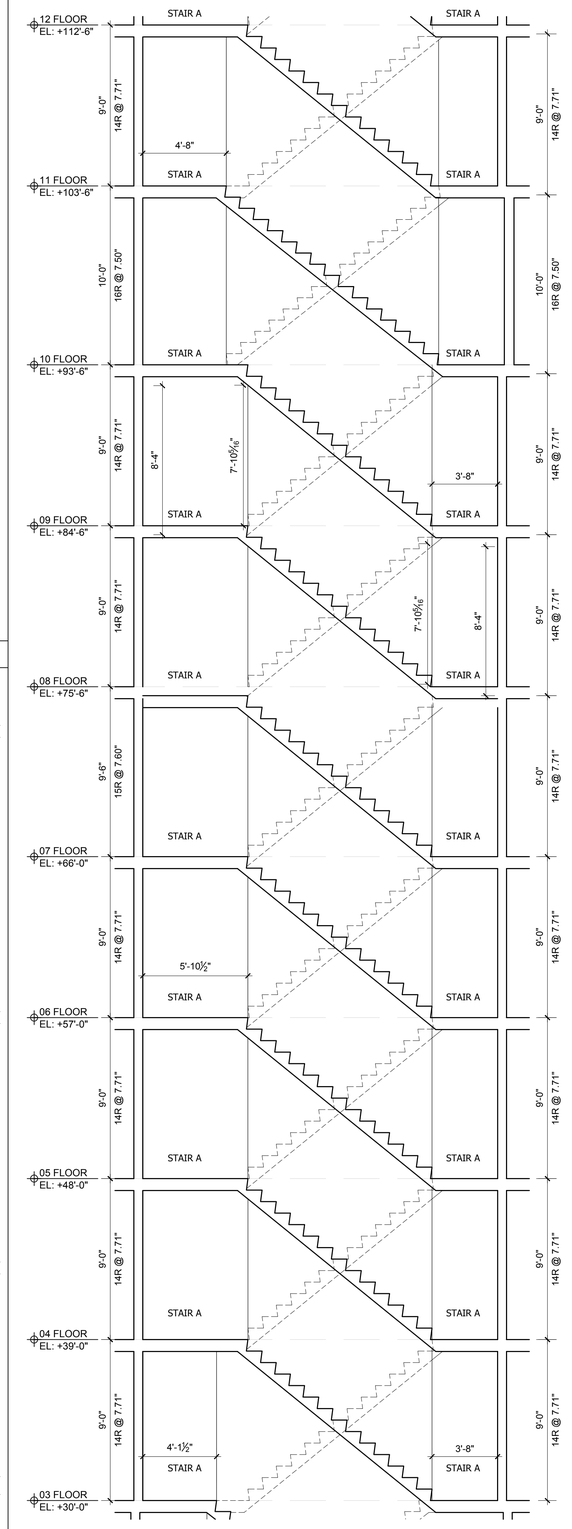

3 SECTION 1 - STAIR A&B: FLOORS 03 - 12
SCALE: 1/4"=1'-0"

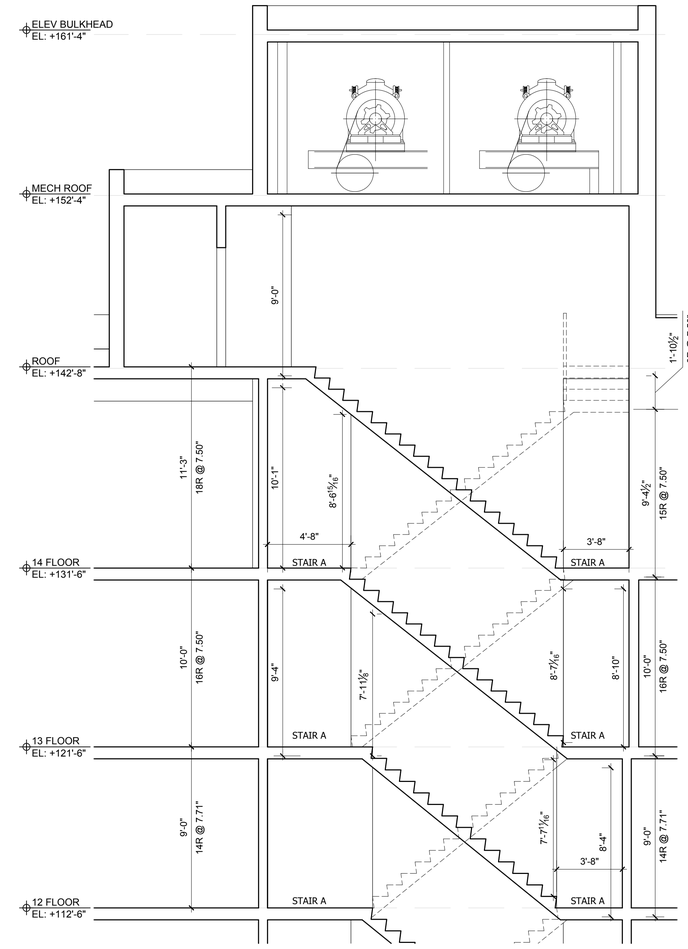

4 SECTION 1 - STAIR A&B: FLOORS 12 - ROOF
SCALE: 1/4"=1'-0"

Client:

RANGER PROPERTIES
4790 BROADWAY
NEW YORK, NY 10034

Architect:

FOGARTY FINGER
architecture | interiors

69 Walker St, New York, NY 10013
t 212 966 7450 f 212 966 7444

Structural:

Thornton Tomasetti
51 Madison Avenue
New York, NY 10010
Tel 917.661.7800

MEP / FP:

Concessi Engineering, PC
499 7th Avenue, 11th Floor South Tower
New York, NY 10018
Tel 212.629.6810

GEOTECH:

FNA Engineering Services, PC
670 Bergen Boulevard, Floor 2
Ridgefield, NJ 07657
Tel 201.241.2444

FACADE:

Simpson Gumpertz & Heger
550 7th Avenue, 10th Floor
New York, NY 10018
Tel 212.271.7000

CODE:

Metropolis
22 Courtland Street, 10th Floor
New York, NY 10007
Tel 212.233.6344

No.	Date	Issue
02	02.06.2019	DD ESTIMATING
01	11.20.2018	SCHEMATIC DESIGN

Project:

4790 BROADWAY
NEW YORK, NY 10034

Drawing Title:

ENLARGED STAIR SECTIONS

Seal & Signature:

DATE (MM-DD-YY): 02-05-2019
PROJECT No.:
DRAWING BY: --
CHK BY: --
DWG. No.: A-501.00
CADD FILE No.:

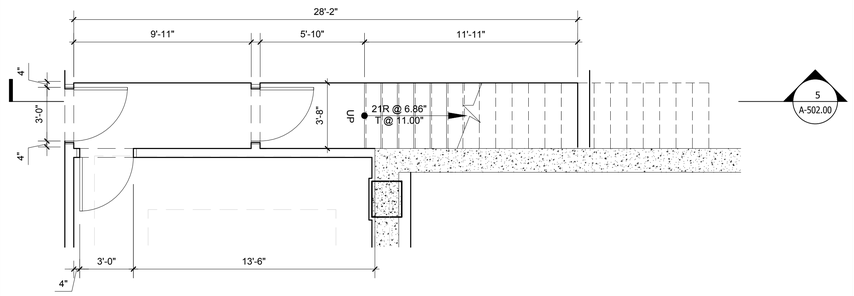

1 EGRESS STAIR D: CELLAR FLOOR
SCALE: 1/4"=1'-0"

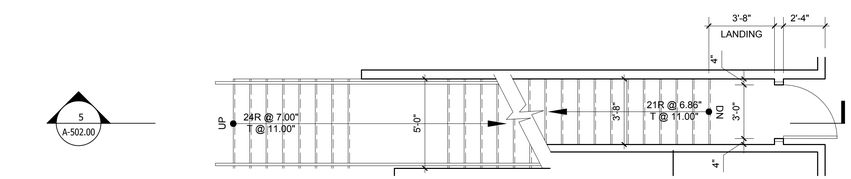

2 EGRESS STAIR D: 1ST FLOOR
SCALE: 1/4"=1'-0"

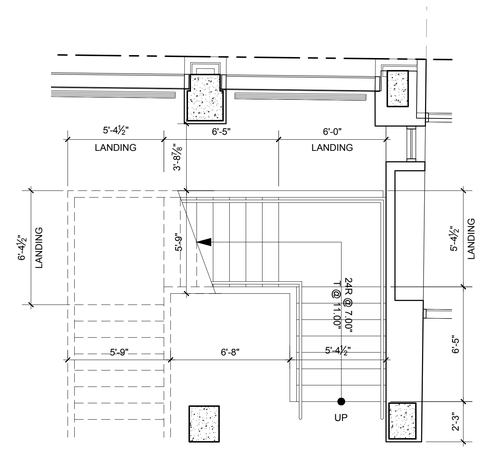

3 STAIR G: FIRST FLOOR
SCALE: 1/4"=1'-0"

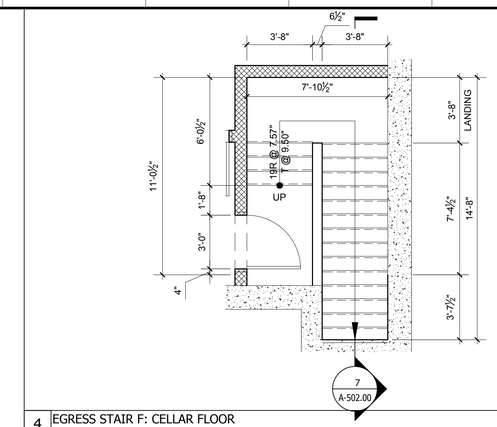

4 EGRESS STAIR F: CELLAR FLOOR
SCALE: 1/4"=1'-0"

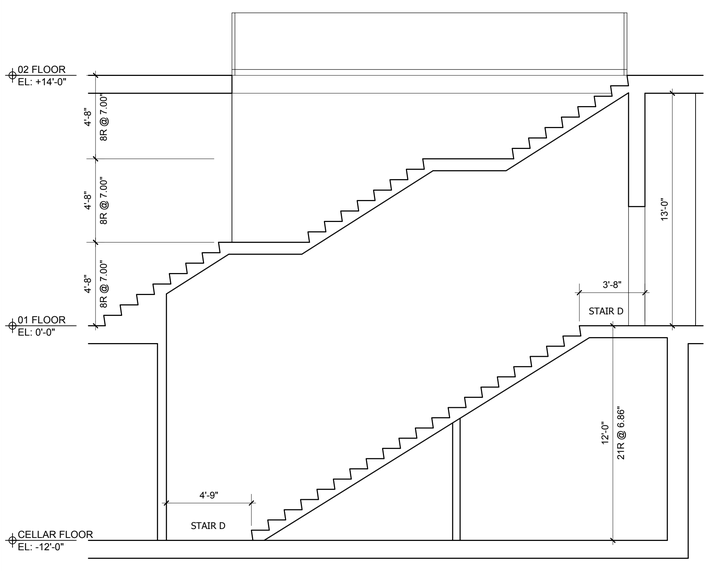

5 STAIR D: FLOORS C - 02
SCALE: 1/4"=1'-0"

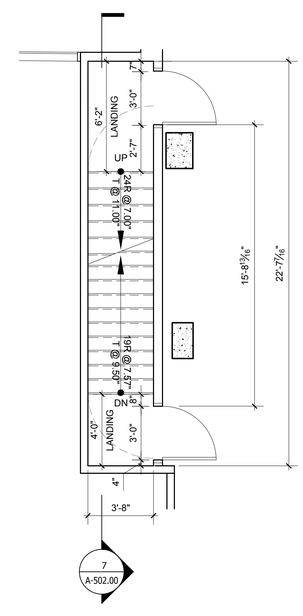

6 EGRESS STAIR F: 1ST FLOOR
SCALE: 1/4"=1'-0"

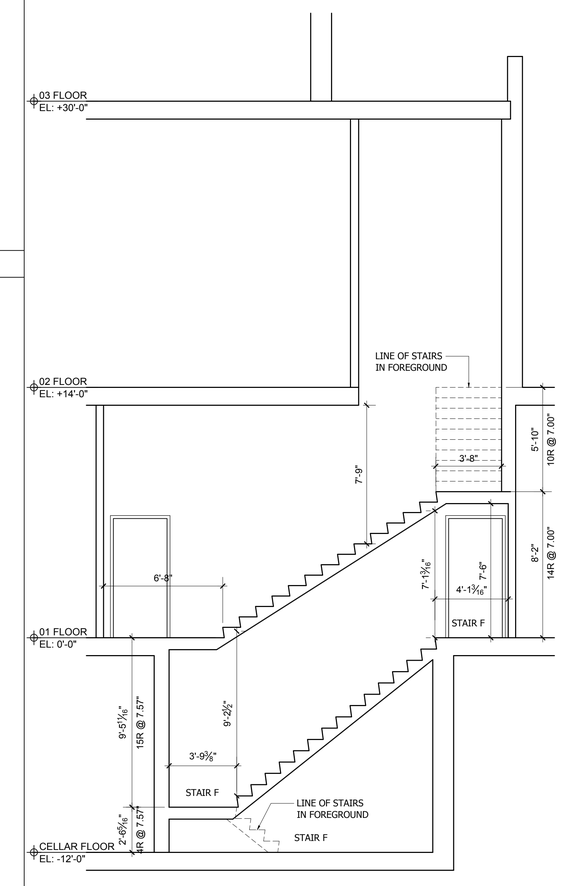

7 STAIR F: FLOORS C - 03
SCALE: 1/4"=1'-0"

Client:

RANGER PROPERTIES
4790 BROADWAY
NEW YORK, NY 10034

Architect:

FOGARTY FINGER
architecture | interiors

69 Walker St, New York, NY 10013
t 212 966 7450 f 212 966 7444

Structural:

Thornton Tomasetti
51 Madison Avenue
New York, NY 10010
Tel 917.661.7800

MEP / FP:

Concessi Engineering, PC
499 7th Avenue, 11th Floor South Tower
New York, NY 10018
Tel 212.629.6810

GEOTECH:

FNA Engineering Services, PC
670 Bergen Boulevard, Floor 2
Ridgefield, NJ 07657
Tel 201.241.2444

FACADE:

Simpson Gumpertz & Heger
550 7th Avenue, 10th Floor
New York, NY 10018
Tel 212.271.7000

CODE:

Metropolis
22 Courtland Street, 10th Floor
New York, NY 10007
Tel 212.233.6344

No.	Date	Issue
02	02.06.2019	DD ESTIMATING
01	11.20.2018	SCHEMATIC DESIGN

Project:

4790 BROADWAY
NEW YORK, NY 10034

Drawing Title:

ENLARGED STAIR PLANS & SECTIONS

Seal & Signature:

DATE (MM-DD-YY): 02-05-2019
PROJECT No.:
DRAWING BY: ...
CHK BY: ...
DWG. No.: A-502.00
CADD FILE No.:

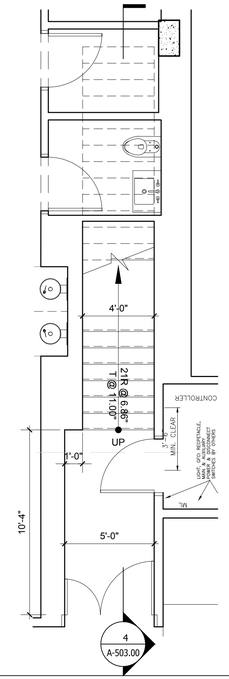

1 EGRESS STAIR C: CELLAR FLOOR
SCALE: 1/4"=1'-0"

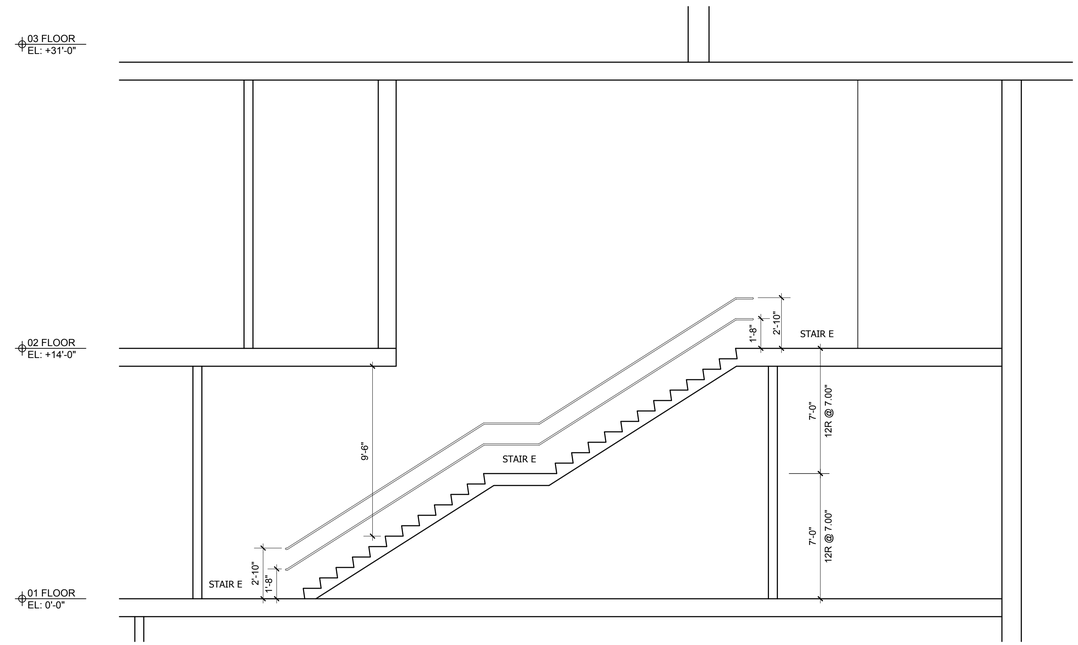

2 EGRESS STAIR E: FLOOR 1 - 2
SCALE: 1/4"=1'-0"

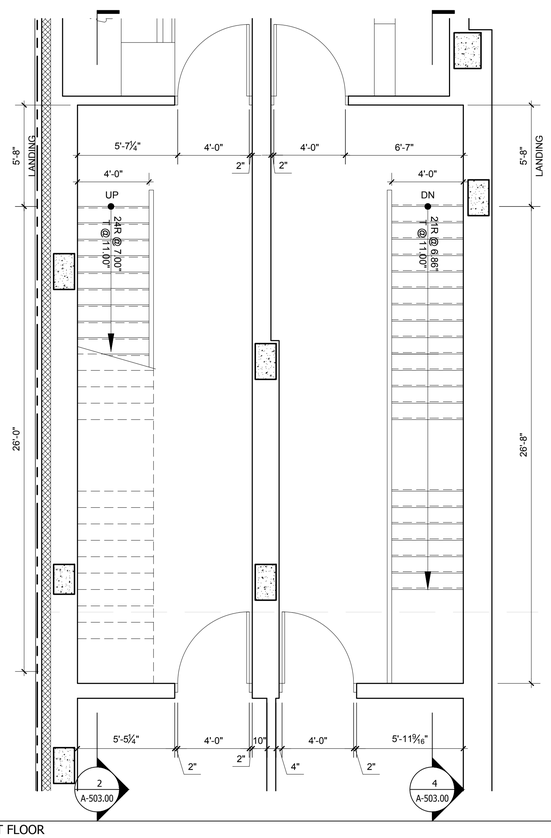

3 EGRESS STAIR E&C: 1ST FLOOR
SCALE: 1/4"=1'-0"

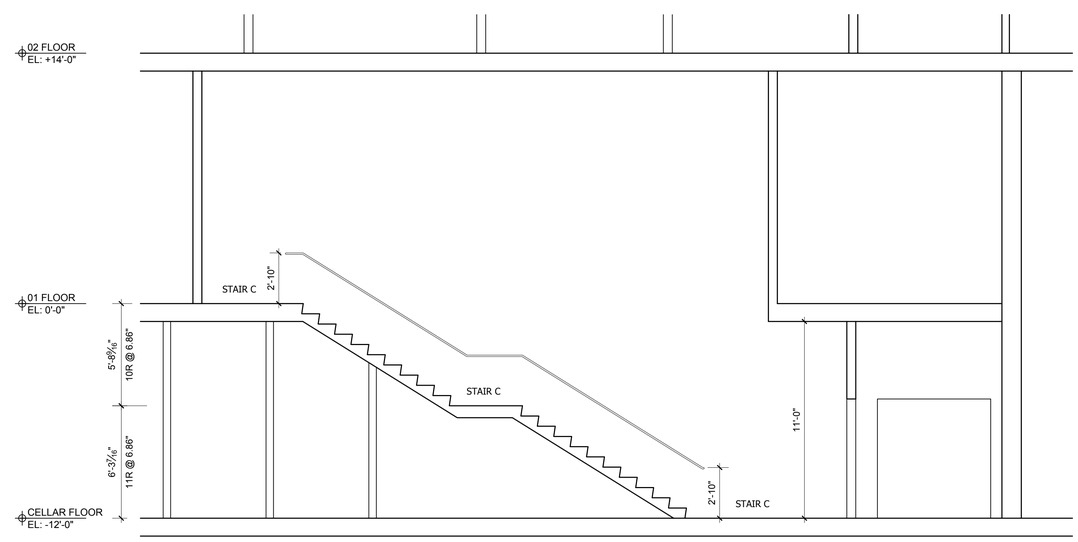

4 EGRESS STAIR C: FLOOR C-1
SCALE: 1/4"=1'-0"

Client:

RANGER PROPERTIES
4790 BROADWAY
NEW YORK, NY 10034

Architect:

FOGARTY FINGER
architecture | interiors

69 Walker St, New York, NY 10013
t 212 966 7450 f 212 966 7444

Structural:

Thornton Tomasetti
51 Madison Avenue
New York, NY 10010
Tel 917.661.7800

MEP / FP:

Concessi Engineering, PC
499 7th Avenue, 11th Floor South Tower
New York, NY 10018
Tel 212.629.6810

GEOTECH:

FNA Engineering Services, PC
670 Bergen Boulevard, Floor 2
Ridgefield, NJ 07657
Tel 201.241.2444

FACADE:

Simpson Gumpertz & Heger
550 7th Avenue, 10th Floor
New York, NY 10018
Tel 212.271.7000

CODE:

Metropolis
22 Courtland Street, 10th Floor
New York, NY 10007
Tel 212.233.6344

No.	Date	Issue
02	02.06.2019	DD ESTIMATING
01	11.20.2018	SCHEMATIC DESIGN

Project:

4790 BROADWAY
NEW YORK, NY 10034

Drawing Title:

ENLARGED STAIR
PLANS & SECTIONS

Seal & Signature:

DATE (MM-DD-YY): 02-05-2019
PROJECT No.:
DRAWING BY: --
CHK BY: --
DWG. No.: A-503.00
CADD FILE No.:

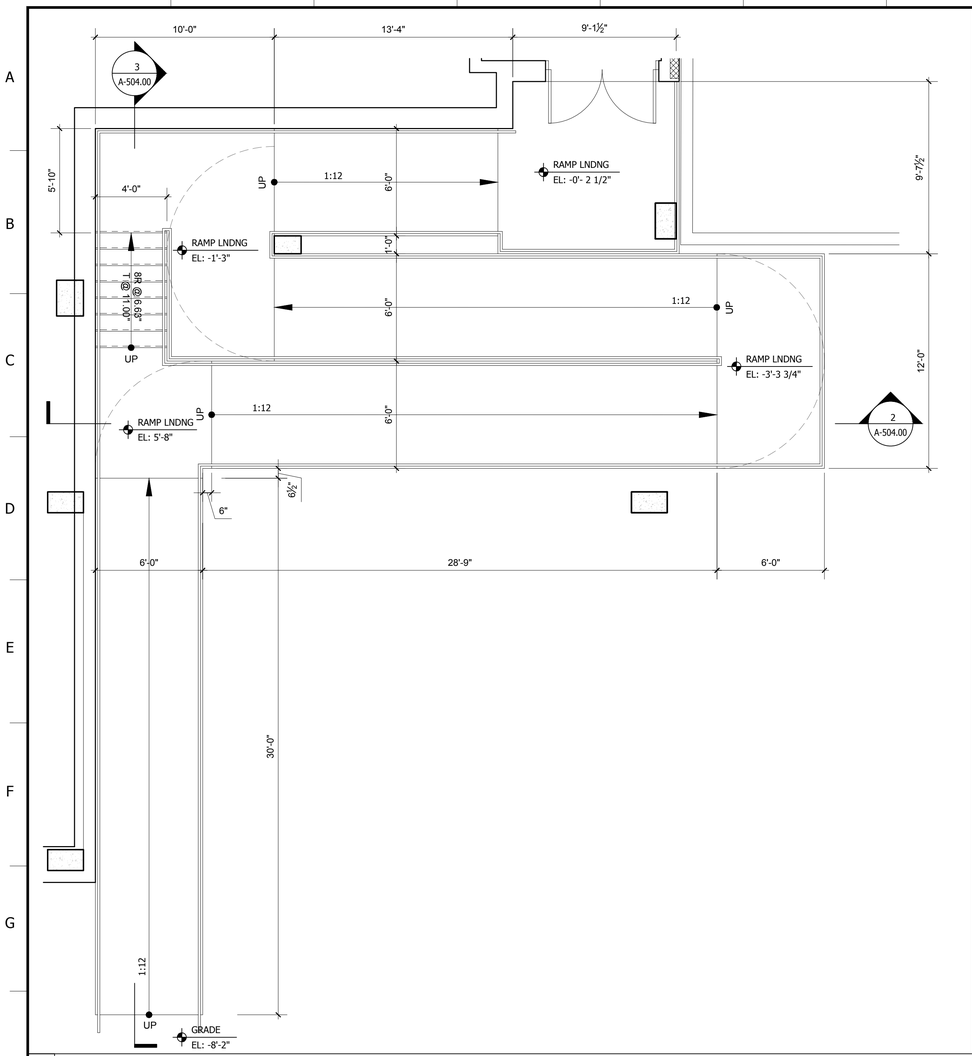

1 RAMP PLAN
SCALE: 1/4"=1'-0"

NOT USED

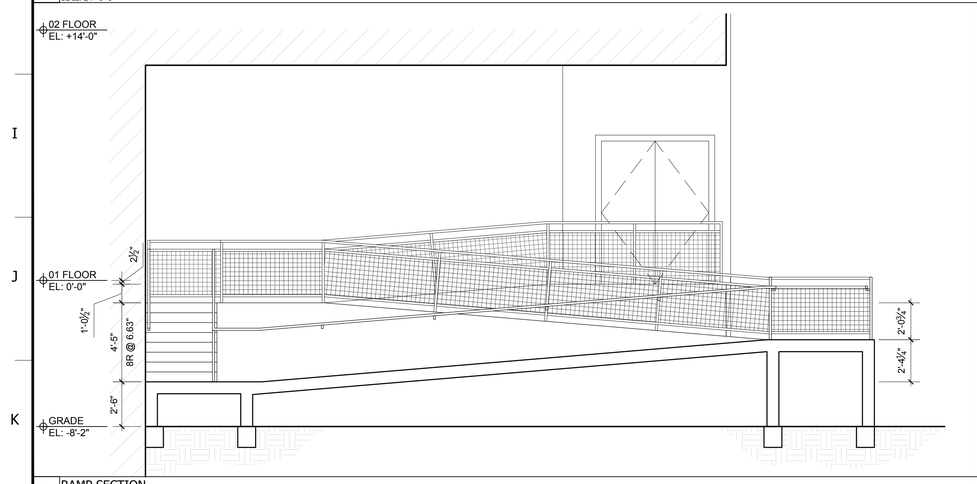

2 RAMP SECTION
SCALE: 1/4"=1'-0"

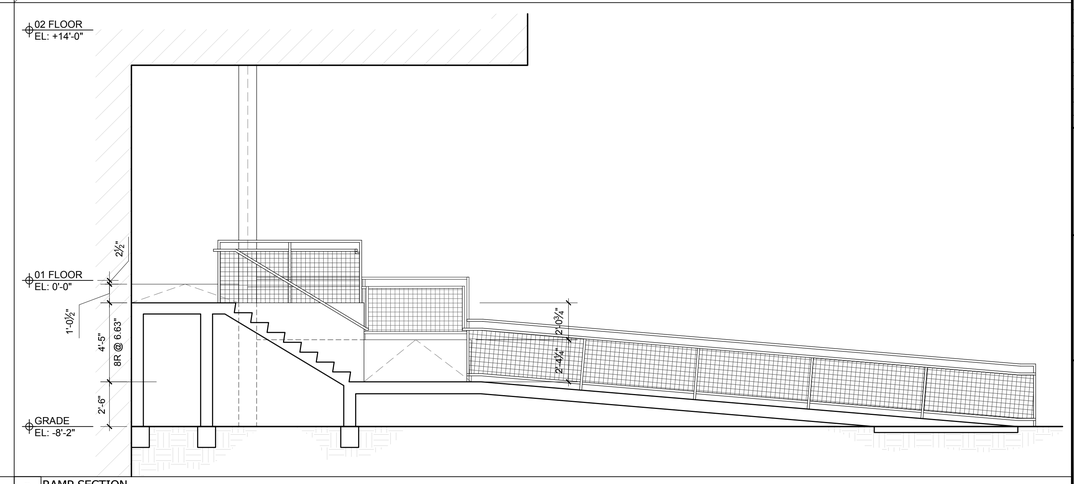

3 RAMP SECTION
SCALE: 1/4"=1'-0"

Client:

RANGER PROPERTIES
4790 BROADWAY
NEW YORK, NY 10034

Architect:

FOGARTY FINGER
architecture | interiors

69 Walker St, New York, NY 10013
t 212 966 7450 f 212 966 7444

Structural:

Thornton Tomasetti
51 Madison Avenue
New York, NY 10010
Tel 917.661.7800

MEP / FP:

Concessi Engineering, PC
499 7th Avenue, 11th Floor South Tower
New York, NY 10018
Tel 212.629.6810

GEOTECH:

FNA Engineering Services, PC
670 Bergen Boulevard, Floor 2
Ridgefield, NJ 07657
Tel 201.241.2444

FACADE:

Simpson Gumpertz & Heger
550 7th Avenue, 10th Floor
New York, NY 10018
Tel 212.271.7000

CODE:

Metropolis
22 Courtland Street, 10th Floor
New York, NY 10007
Tel 212.233.6344

No.	Date	Issue
02	02.06.2019	DD ESTIMATING
01	11.20.2018	SCHEMATIC DESIGN

Project:

4790 BROADWAY
NEW YORK, NY 10034

Drawing Title:

ENLARGED RAMP
PLAN & SECTIONS

Seal & Signature:

DATE (MM-DD-YY): 02-05-2019
PROJECT No.:
DRAWING BY: --
CHK BY: --
DWG. No.: A-504.00
CADD FILE No.:

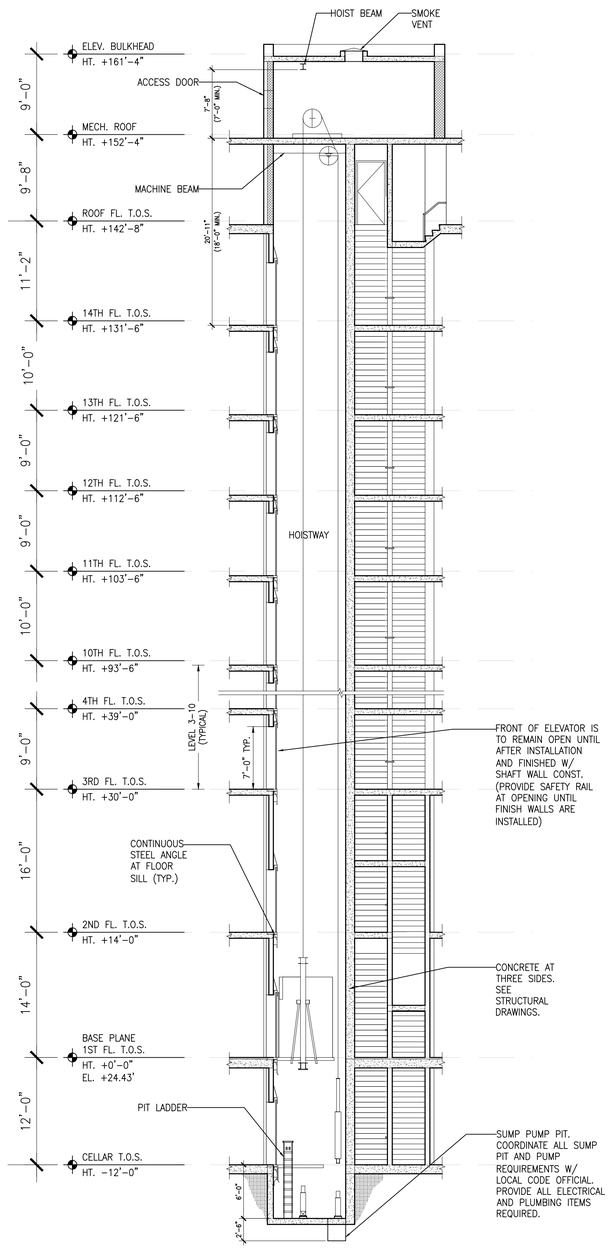

1 ELEVATOR SECTION
SCALE: 1/8"=1'-0"

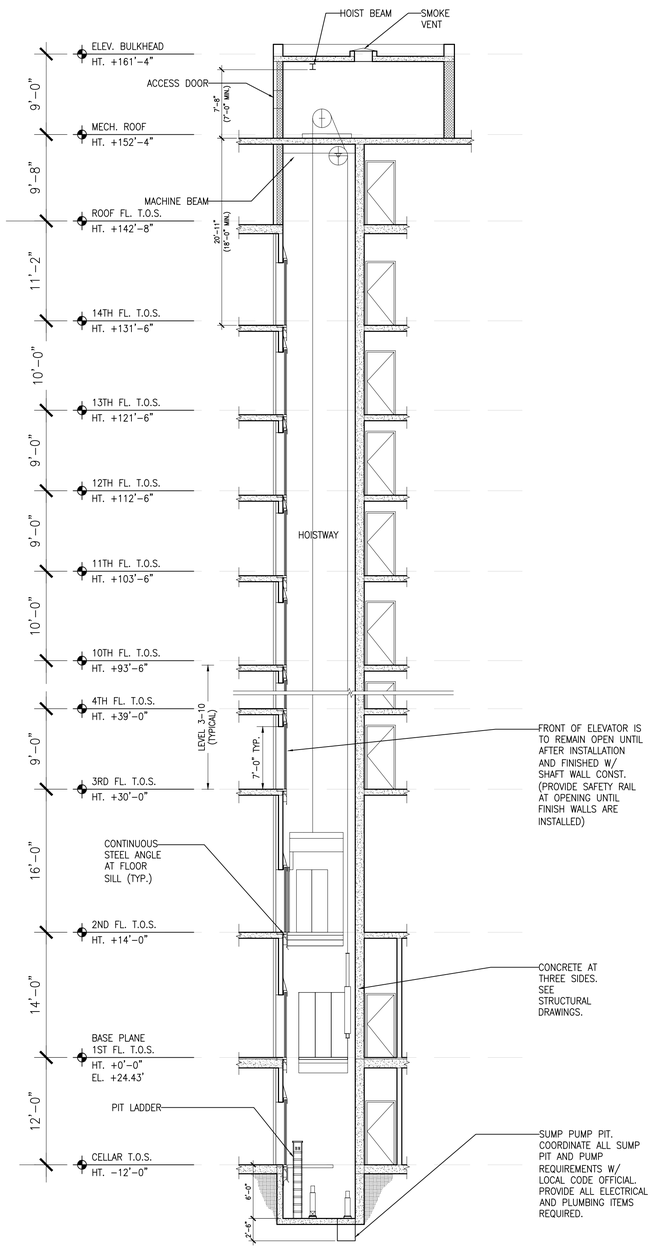

2 ELEVATOR SECTION
SCALE: 1/8"=1'-0"

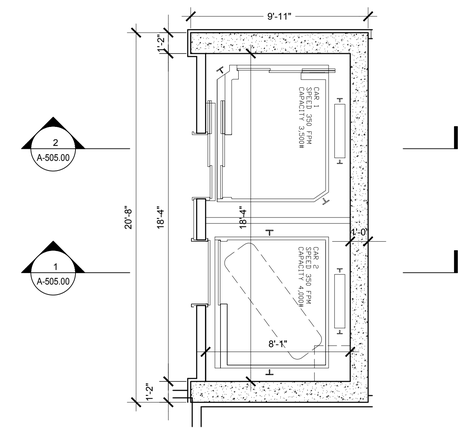

3 ELEVATOR PLAN: CELLAR FLOOR
SCALE: 1/4"=1'-0"

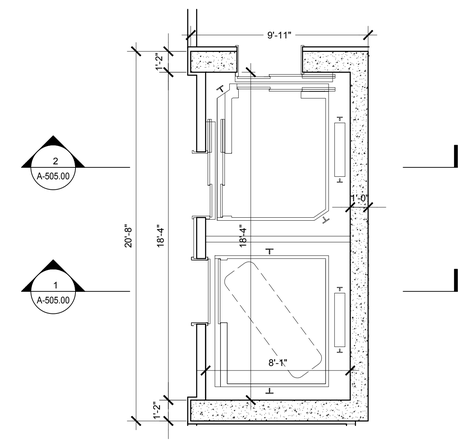

4 ELEVATOR PLAN: 1ST FLOOR
SCALE: 1/4"=1'-0"

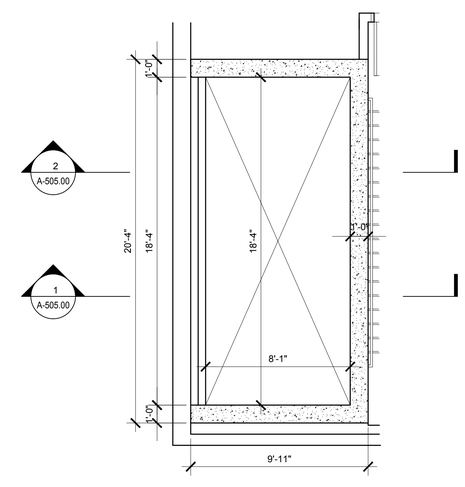

5 ELEVATOR PLAN: BULKHEAD
SCALE: 1/4"=1'-0"

Client:

RANGER PROPERTIES
4790 BROADWAY
NEW YORK, NY 10034

Architect:

FOGARTY FINGER
architecture | interiors

69 Walker St, New York, NY 10013
t 212 966 7450 f 212 966 7444

Structural:

Thornton Tomasetti
51 Madison Avenue
New York, NY 10010
Tel 917.661.7800

MEP / FP:

Concessi Engineering, PC
499 7th Avenue, 11th Floor South Tower
New York, NY 10018
Tel 212.629.6810

GEOTECH:

FNA Engineering Services, PC
670 Bergen Boulevard, Floor 2
Ridgefield, NJ 07657
Tel 201.241.2444

FACADE:

Simpson Gumpertz & Heger
550 7th Avenue, 10th Floor
New York, NY 10018
Tel 212.271.7000

CODE:

Metropolis
22 Courtland Street, 10th Floor
New York, NY 10007
Tel 212.233.6344

No.	Date	Issue
02	02.06.2019	DD ESTIMATING
01	11.20.2018	SCHEMATIC DESIGN

Project:

4790 BROADWAY
NEW YORK, NY 10034

Drawing Title:

ELEVATOR PLANS & SECTIONS

Seal & Signature:

DATE (MM-DD-YY): 02-05-2019
PROJECT No.:
DRAWING BY: --
CHK BY: --
DWG. No.: A-505.00
CADD FILE No.:

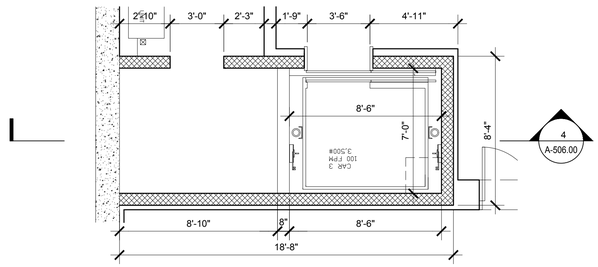

1 ELEVATOR PLAN - CELLAR FLOOR
SCALE: 1/4"=1'=0"

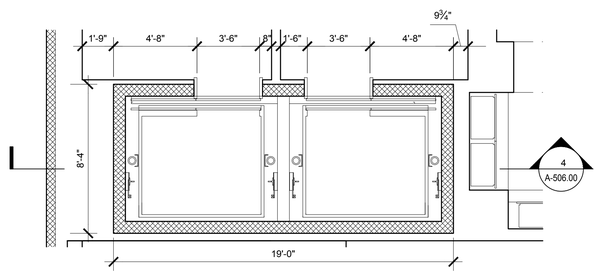

2 ELEVATOR PLAN - 1ST FLOOR
SCALE: 1/4"=1'=0"

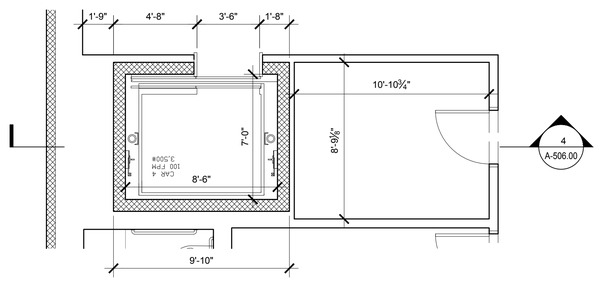

3 ELEVATOR PLAN - 2ND FLOOR
SCALE: 1/4"=1'=0"

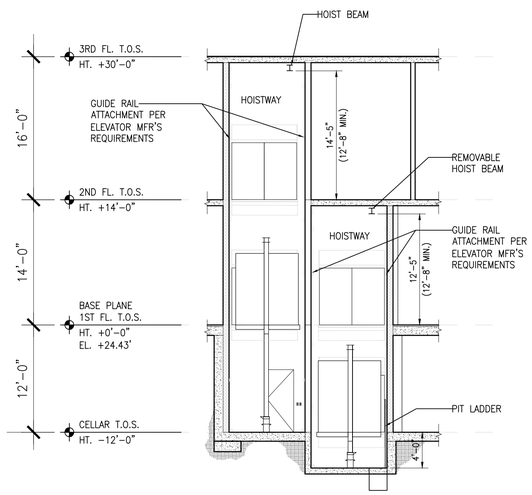

4 ELEVATOR SECTION
SCALE: 1/8"=1'=0"

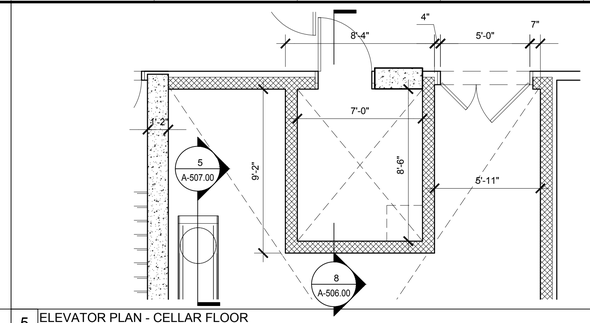

5 ELEVATOR PLAN - CELLAR FLOOR
SCALE: 1/4"=1'=0"

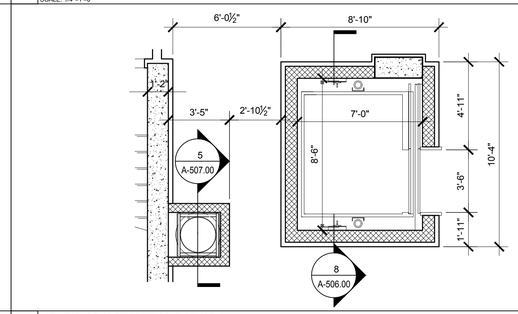

6 ELEVATOR PLAN - 1ST FLOOR
SCALE: 1/4"=1'=0"

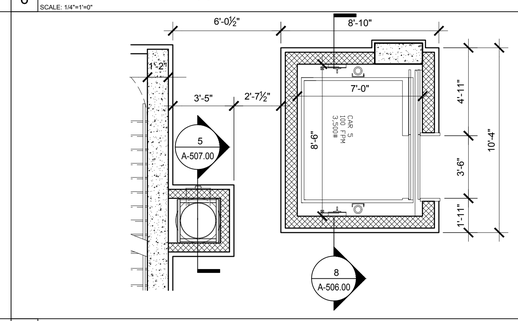

7 ELEVATOR PLAN - 2ND FLOOR
SCALE: 1/4"=1'=0"

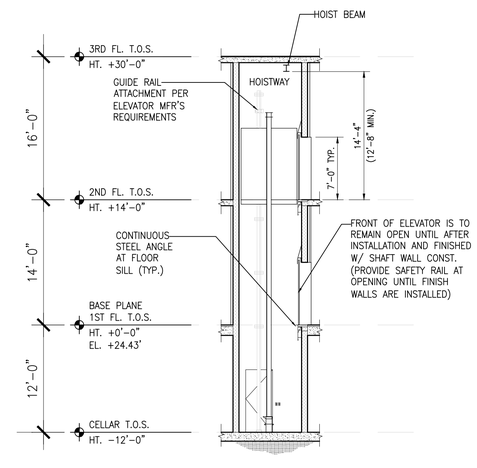

8 ELEVATOR SECTION
SCALE: 1/8"=1'=0"

NOT USED

Client:

RANGER PROPERTIES
4790 BROADWAY
NEW YORK, NY 10034

Architect:

FOGARTY FINGER
architecture | interiors

69 Walker St, New York, NY 10013
t 212 966 7450 f 212 966 7444

Structural:

Thornton Tomasetti
51 Madison Avenue
New York, NY 10010
Tel 917.661.7800

MEP / FP:

Concessi Engineering, PC
499 7th Avenue, 11th Floor South Tower
New York, NY 10018
Tel 212.629.6810

GEOTECH:

FNA Engineering Services, PC
670 Bergen Boulevard, Floor 2
Ridgefield, NJ 07657
Tel 201.241.2444

FACADE:

Simpson Gumpertz & Heger
550 7th Avenue, 10th Floor
New York, NY 10018
Tel 212.271.7000

CODE:

Metropolis
22 Courtland Street, 10th Floor
New York, NY 10007
Tel 212.233.6344

No.	Date	Issue
02	02.06.2019	DD ESTIMATING
01	11.20.2018	SCHEMATIC DESIGN

Project:

4790 BROADWAY
NEW YORK, NY 10034

Drawing Title:

ELEVATOR PLANS & SECTIONS

Seal & Signature:

DATE (MM-DD-YY): 02-05-2019
PROJECT No.:
DRAWING BY: –
CHK BY: –
DWG. No.:
A-506.00
CADD FILE No.:

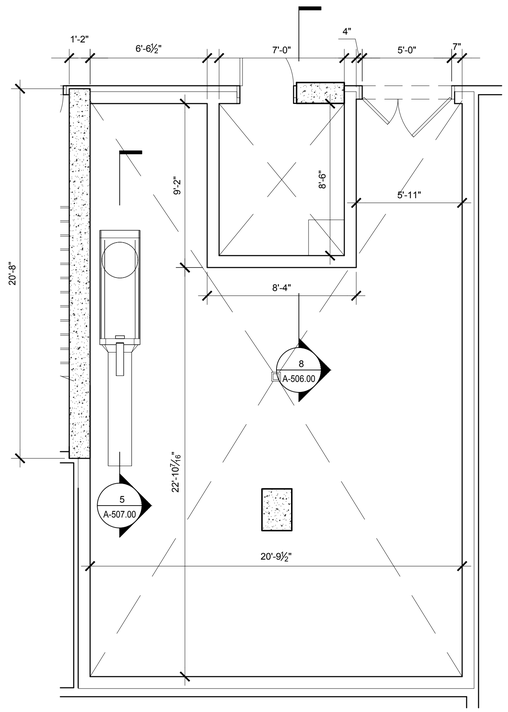

1 CELLAR FLOOR PLAN
SCALE: 1/4"=1'-0"

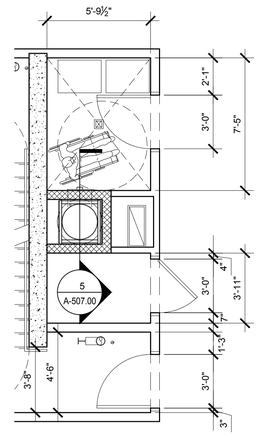

2 TYPICAL TRASH ROOM PLAN
SCALE: 1/4"=1'-0"

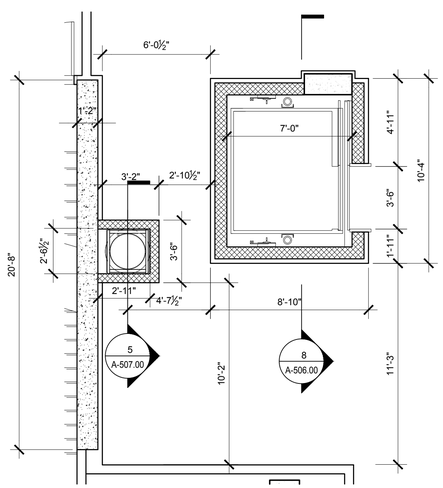

3 1ST FLOOR PLAN
SCALE: 1/4"=1'-0"

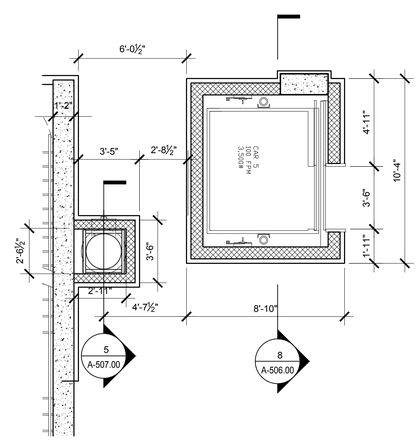

4 2ND FLOOR PLAN
SCALE: 1/4"=1'-0"

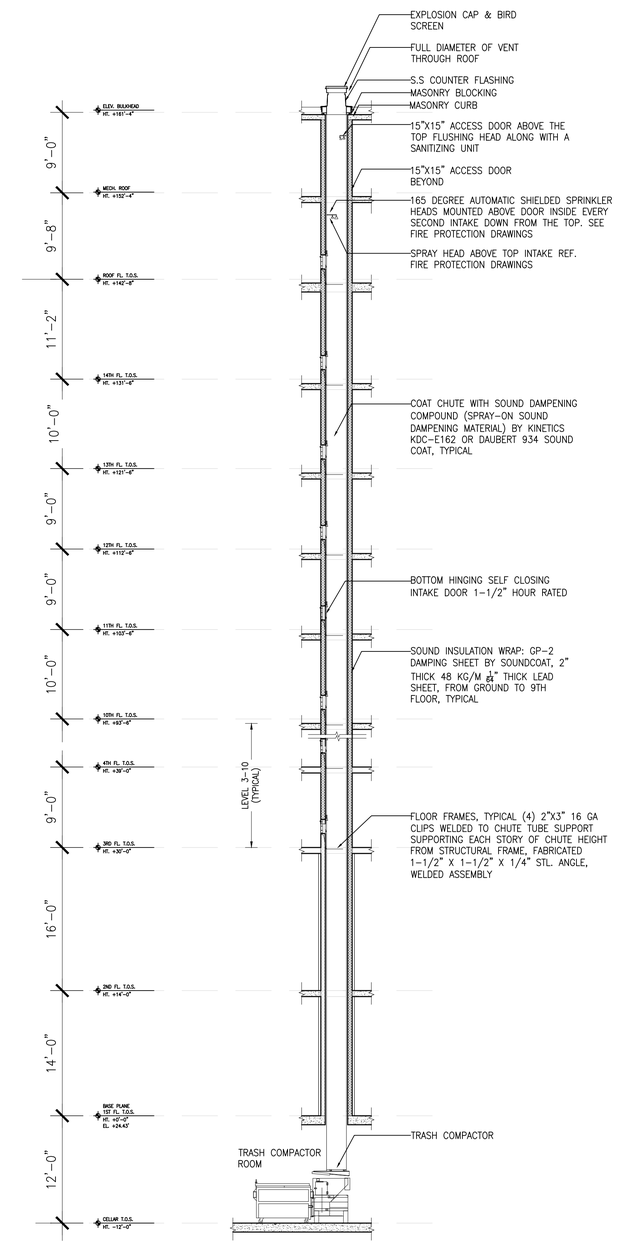

5 TRASH CHUTE SECTION
SCALE: 1/8"=1'-0"

Client:

RANGER PROPERTIES
4790 BROADWAY
NEW YORK, NY 10034

Architect:

FOGARTY FINGER
architecture | interiors

69 Walker St, New York, NY 10013
t 212 966 7450 f 212 966 7444

Structural:

Thornton Tomasetti
51 Madison Avenue
New York, NY 10010
Tel 917.661.7800

MEP / FP:

Concessi Engineering, PC
499 7th Avenue, 11th Floor South Tower
New York, NY 10018
Tel 212.629.6810

GEOTECH:

FNA Engineering Services, PC
670 Bergen Boulevard, Floor 2
Ridgefield, NJ 07657
Tel 201.241.2444

FACADE:

Simpson Gumpertz & Heger
550 7th Avenue, 10th Floor
New York, NY 10018
Tel 212.271.7000

CODE:

Metropolis
22 Courtland Street, 10th Floor
New York, NY 10007
Tel 212.233.6344

No.	Date	Issue
02	02.06.2019	DD ESTIMATING
01	11.20.2018	SCHEMATIC DESIGN

Project:

4790 BROADWAY
NEW YORK, NY 10034

Drawing Title:

ELEVATOR & TRASH CHUTE PLAN & SECTION

Seal & Signature:

DATE (MM-DD-YY): 02-05-2019
PROJECT No.:
DRAWING BY: –
CHK BY: –
DWG. No.: A-507.00
CADD FILE No.:

1 1ST FLOOR REFLECTIVE CEILING PLAN
SCALE: 1/8"=1'-0"

GENERAL NOTES

A ALL SPOT ELEVATIONS SHOWN ARE FROM T.O.S.

B ALL GYP. BD. CEILING SHALL BE ASTM C-840-8 22.6.5 LEVEL 4 FINISH MINIMUM. TO RECEIVE PAINT (PT-01 (COMMON SPACES) PT-10 (APARTMENTS)) U.O.N

C ALL CLOSET CEILINGS SHALL BE ASTM C840-8 22.6.4 LEVEL 3 FINISH OR BETTER TO RECEIVE PAINT (PT-01 (COMMON SPACES) PT-10 (APARTMENTS)) U.O.N

D UNDERSIDE OF ALL EXPOSED SLABS SHALL BE LEFT AS-POURED IN ANTICIPATION OF FUTURE SUSPENDED CEILING.

E REFER TO ELECTRICAL DRAWINGS FOR ELECTRICAL AND DATA LAYOUT AND SYMBOLS LEGEND

F REFER TO LIGHTING SCHEDULE ON A-901.00.

G IN SWITCHED DUPLEX OUTLETS LOWER RECEPTACLE TO BE SWITCH

H REFER TO ELECTRICAL DRAWINGS FOR LIGHTING FIXTURE LAYOUT AND SPECIFICATIONS AT ALL BACK OF HOUSE SPACES

LEGEND

SUSPENDED GYP. BOARD CEILING.

EXPOSED SLAB W/ CONCRETE FINISHING SYSTEM (KADEX)

VERTICAL SHAFT

GYP. BOARD SOFFIT

PERFORATED METAL PANEL

SUSPENDED 2'X4' TILE PANEL CEILING

C1 SCONCE

C2 RECESSED DOWN LIGHTING

C3 4' STRIP LIGHT W/ J.BOX CAST INTO SLAB

C4 2'X4' CEILING RECESSED FIXTURE

LXX STAIRWELL LIGHT

F10 1'X4' PENDANT LIGHTING FIXTURE

U2 2' LED BATH BAR

KEY NOTE LEGEND

1 12" DEEP SMOKE BAFFLE

Client:

RANGER PROPERTIES
4790 BROADWAY
NEW YORK, NY 10034

Architect:

FOGARTY FINGER
architecture | interiors
69 Walker St, New York, NY 10013
t 212 966 7450 f 212 966 7444

Structural:

Thornton Tomasetti
51 Madison Avenue
New York, NY 10010
Tel 917.661.7800

MEP / FP:

Concessi Engineering, PC
499 7th Avenue, 11th Floor South Tower
New York, NY 10018
Tel 212.629.6810

GEOTECH:

FNA Engineering Services, PC
670 Bergen Boulevard, Floor 2
Ridgefield, NJ 07657
Tel 201.241.2444

FACADE:

Simpson Gumpertz & Heger
550 7th Avenue, 10th Floor
New York, NY 10018
Tel 212.271.7000

CODE:

Metropolis
22 Courtland Street, 10th Floor
New York, NY 10007
Tel 212.233.6344

No.	Date	Issue
02	02.06.2019	DD ESTIMATING
01	11.20.2018	SCHEMATIC DESIGN

Project:

4790 BROADWAY
NEW YORK, NY 10034

Drawing Title:

REFLECTED CEILING PLAN CELLAR FLOOR

Seal & Signature:

DATE (MM-DD-YY): 02-05-2019
PROJECT No.:
DRAWING BY: –
CHK BY: –
DWG. No.: A-600.00
CADD FILE No.:

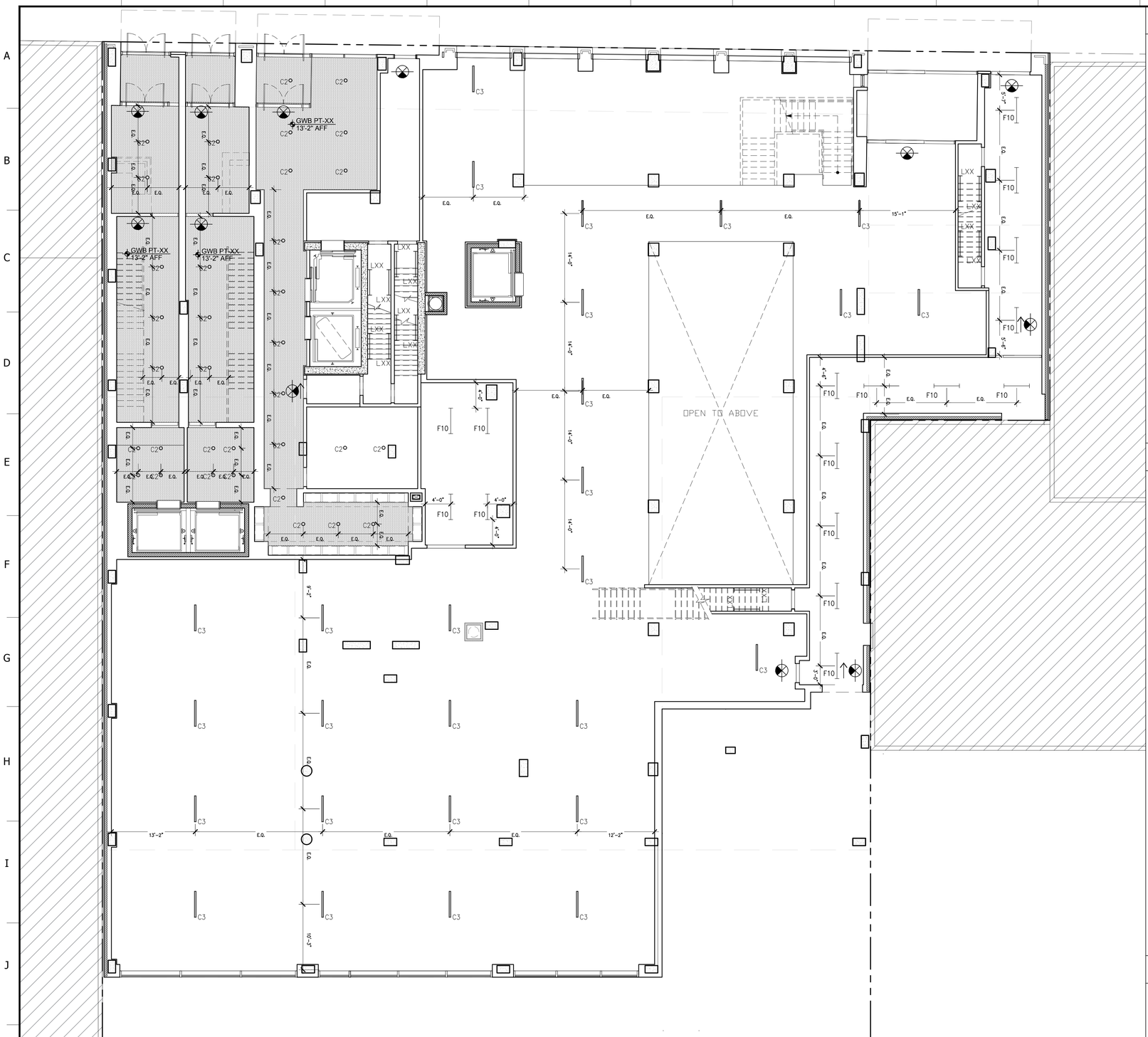

1 1ST FLOOR REFLECTIVE CEILING PLAN
SCALE: 1/8"=1'-0"

GENERAL NOTES

A ALL SPOT ELEVATIONS SHOWN ARE FROM T.O.S.

B ALL GYP. BD. CEILING SHALL BE ASTM C-840-8 22.6.5 LEVEL 4 FINISH MINIMUM. TO RECEIVE PAINT (PT-01 (COMMON SPACES) PT-10 (APARTMENTS)) U.O.N

C ALL CLOSET CEILINGS SHALL BE ASTM C840-8 22.6.4 LEVEL 3 FINISH OR BETTER TO RECEIVE PAINT (PT-01 (COMMON SPACES) PT-10 (APARTMENTS)) U.O.N

D UNDERSIDE OF ALL EXPOSED SLABS SHALL BE LEFT AS-POURED IN ANTICIPATION OF FUTURE SUSPENDED CEILING.

E REFER TO ELECTRICAL DRAWINGS FOR ELECTRICAL AND DATA LAYOUT AND SYMBOLS LEGEND

F REFER TO LIGHTING SCHEDULE ON A-901.00.

G IN SWITCHED DUPLEX OUTLETS LOWER RECEPTACLE TO BE SWITCH

H REFER TO ELECTRICAL DRAWINGS FOR LIGHTING FIXTURE LAYOUT AND SPECIFICATIONS AT ALL BACK OF HOUSE SPACES

LEGEND

SUSPENDED GYP. BOARD CEILING.

EXPOSED SLAB W/ CONCRETE FINISHING SYSTEM (KADEX)

VERTICAL SHAFT

GYP. BOARD SOFFIT

PERFORATED METAL PANEL

SUSPENDED 2'X4' TILE PANEL CEILING

C1 SCONCE

C2 RECESSED DOWN LIGHTING

C3 4' STRIP LIGHT W/ J.BOX CAST INTO SLAB

C4 2'X4' CEILING RECESSED FIXTURE

LXX STAIRWELL LIGHT

F10 1'X4' PENDANT LIGHTING FIXTURE

U2 2' LED BATH BAR

KEY NOTE LEGEND

1 12" DEEP SMOKE BAFFLE

Client:

RANGER PROPERTIES
4790 BROADWAY
NEW YORK, NY 10034

Architect:

FOGARTY FINGER
architecture | interiors
69 Walker St, New York, NY 10013
t 212 966 7450 f 212 966 7444

Structural:

Thornton Tomasetti
51 Madison Avenue
New York, NY 10010
Tel 917.661.7800

MEP / FP:

Concessi Engineering, PC
499 7th Avenue, 11th Floor South Tower
New York, NY 10018
Tel 212.629.6810

GEOTECH:

FNA Engineering Services, PC
670 Bergen Boulevard, Floor 2
Ridgefield, NJ 07657
Tel 201.241.2444

FACADE:

Simpson Gumpertz & Heger
550 7th Avenue, 10th Floor
New York, NY 10018
Tel 212.271.7000

CODE:

Metropolis
22 Courtland Street, 10th Floor
New York, NY 10007
Tel 212.233.6344

No.	Date	Issue
02	02.06.2019	DD ESTIMATING
01	11.20.2018	SCHEMATIC DESIGN

Project:

4790 BROADWAY
NEW YORK, NY 10034

Drawing Title:

REFLECTED CEILING PLAN 1ST FLOOR

Seal & Signature:

DATE (MM-DD-YY): 02-05-2019
PROJECT No.:
DRAWING BY: –
CHK BY: –
DWG. No.: A-601.00
CADD FILE No.:

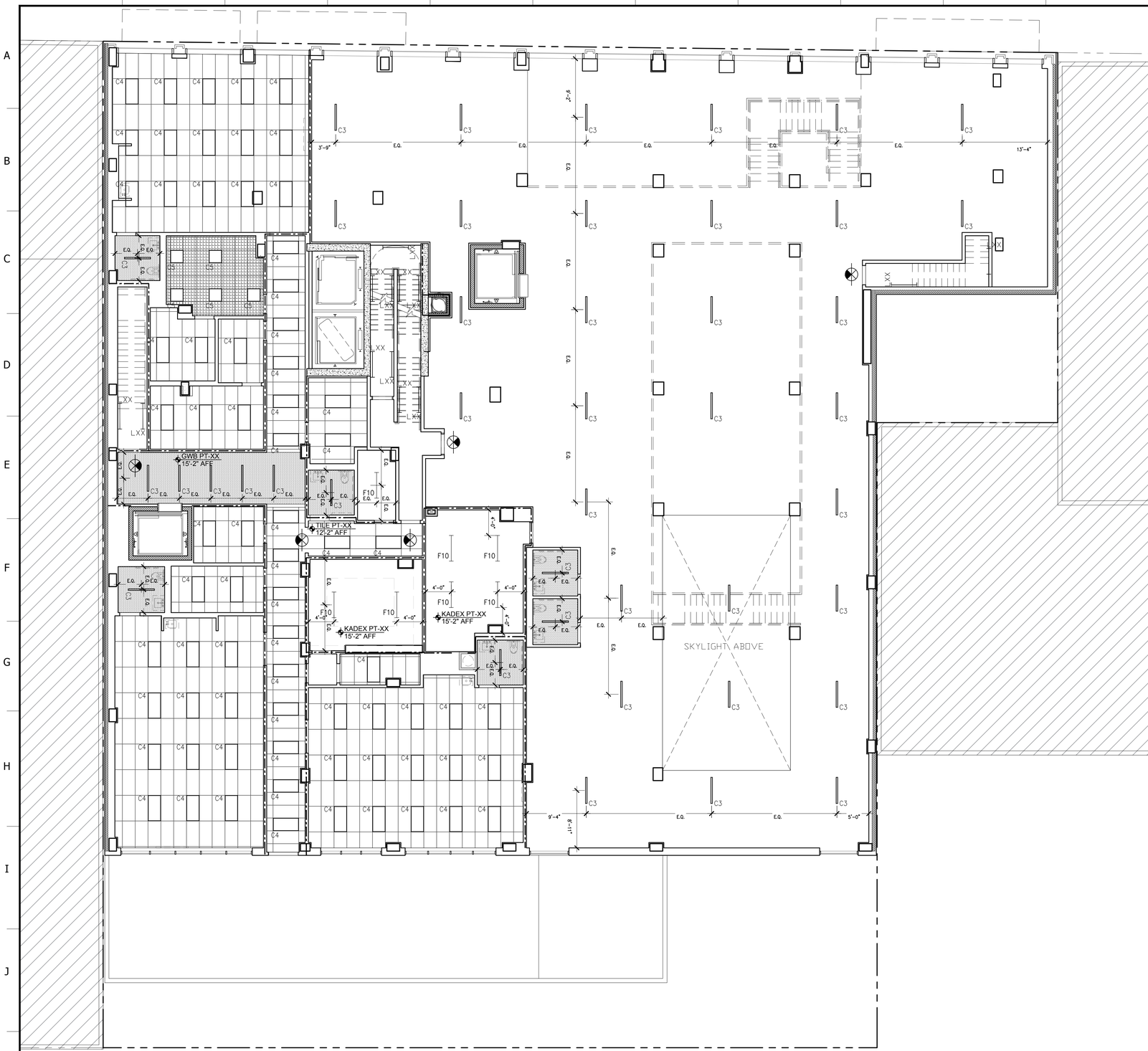

1 2ND FLOOR REFLECTIVE CEILING PLAN
SCALE: 1/8"=1'-0"

GENERAL NOTES

A ALL SPOT ELEVATIONS SHOWN ARE FROM T.O.S.

B ALL GYP. BD. CEILING SHALL BE ASTM C-840-8 22.6.5 LEVEL 4 FINISH MINIMUM. TO RECEIVE PAINT (PT-01 (COMMON SPACES) PT-10 (APARTMENTS)) U.O.N

C ALL CLOSET CEILINGS SHALL BE ASTM C840-8 22.6.4 LEVEL 3 FINISH OR BETTER TO RECEIVE PAINT (PT-01 (COMMON SPACES) PT-10 (APARTMENTS)) U.O.N

D UNDERSIDE OF ALL EXPOSED SLABS SHALL BE LEFT AS-POURED IN ANTICIPATION OF FUTURE SUSPENDED CEILING.

E REFER TO ELECTRICAL DRAWINGS FOR ELECTRICAL AND DATA LAYOUT AND SYMBOLS LEGEND

F REFER TO LIGHTING SCHEDULE ON A-901.00.

G IN SWITCHED DUPLEX OUTLETS LOWER RECEPTACLE TO BE SWITCH

H REFER TO ELECTRICAL DRAWINGS FOR LIGHTING FIXTURE LAYOUT AND SPECIFICATIONS AT ALL BACK OF HOUSE SPACES

LEGEND

SUSPENDED GYP. BOARD CEILING.

EXPOSED SLAB W/ CONCRETE FINISHING SYSTEM (KADEX)

VERTICAL SHAFT

GYP. BOARD SOFFIT

PERFORATED METAL PANEL

SUSPENDED 2'X4' TILE PANEL CEILING

C1 SCONCE

C2 RECESSED DOWN LIGHTING

C3 4' STRIP LIGHT W/ J.BOX CAST INTO SLAB

C4 2'X4' CEILING RECESSED FIXTURE

LXX STAIRWELL LIGHT

F10 1'X4' PENDANT LIGHTING FIXTURE

U2 2' LED BATH BAR

KEY NOTE LEGEND

1 12" DEEP SMOKE BAFFLE

Client:

RANGER PROPERTIES
4790 BROADWAY
NEW YORK, NY 10034

Architect:

FOGARTY FINGER
architecture | interiors
69 Walker St, New York, NY 10013
t 212 966 7450 f 212 966 7444

Structural:

Thornton Tomasetti
51 Madison Avenue
New York, NY 10010
Tel 917.661.7800

MEP / FP:

Concessi Engineering, PC
499 7th Avenue, 11th Floor South Tower
New York, NY 10018
Tel 212.629.6810

GEOTECH:

FNA Engineering Services, PC
670 Bergen Boulevard, Floor 2
Ridgefield, NJ 07657
Tel 201.241.2444

FACADE:

Simpson Gumpertz & Heger
550 7th Avenue, 10th Floor
New York, NY 10018
Tel 212.271.7000

CODE:

Metropolis
22 Courtland Street, 10th Floor
New York, NY 10007
Tel 212.233.6344

No.	Date	Issue
02	02.06.2019	DD ESTIMATING
01	11.20.2018	SCHEMATIC DESIGN

Project:

4790 BROADWAY
NEW YORK, NY 10034

Drawing Title:

REFLECTED CEILING PLAN 2ND FLOOR

Seal & Signature:

DATE (MM-DD-YY): 02-05-2019
PROJECT No.:
DRAWING BY: ...
CHK BY: ...
DWG. No.: A-602.00
CADD FILE No.:

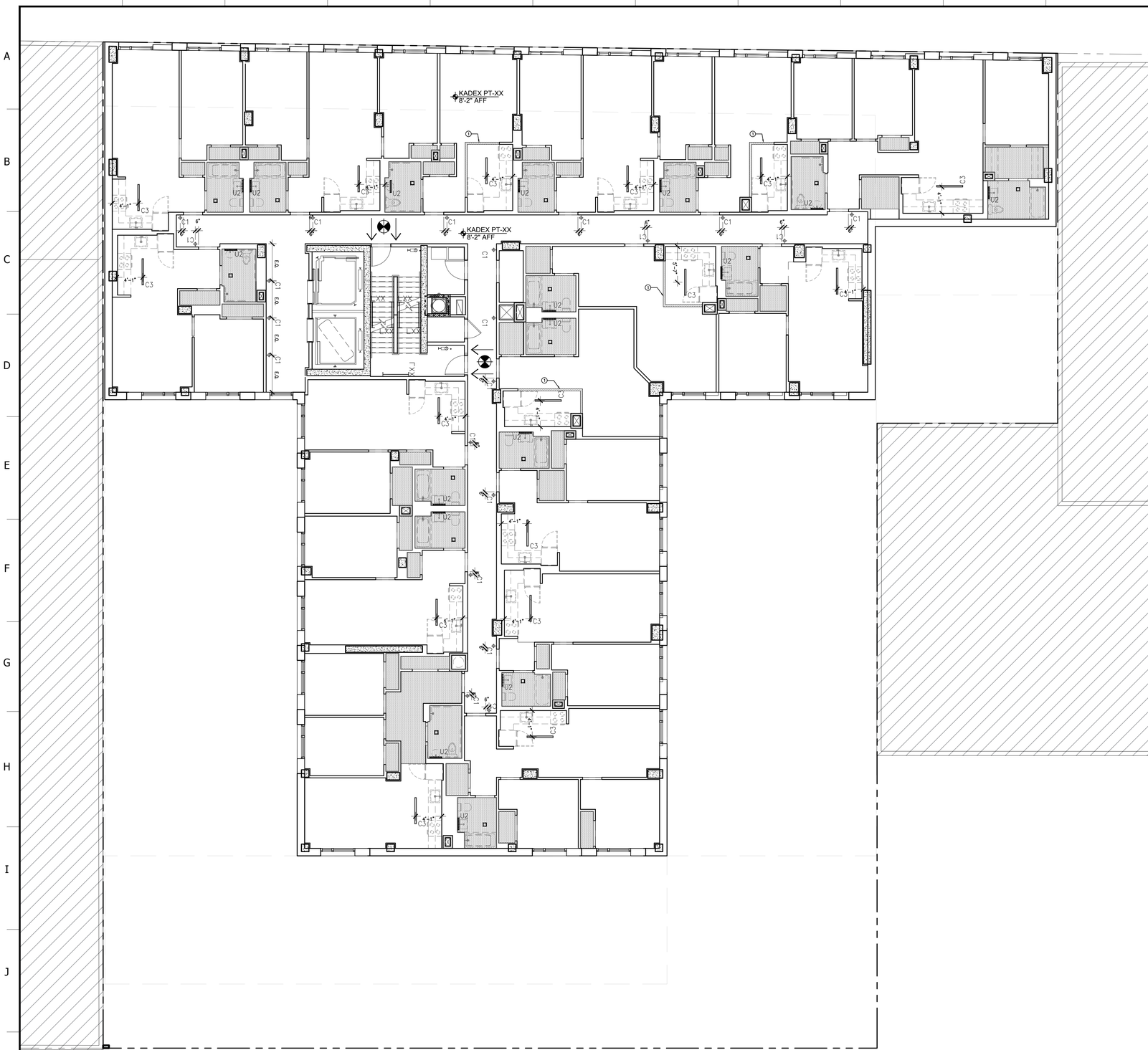

1 FOURTH THRU TENTH FLOOR REFLECTIVE CEILING PLAN
SCALE: 1/8"=1'-0"

GENERAL NOTES

A ALL SPOT ELEVATIONS SHOWN ARE FROM T.O.S.

B ALL GYP. BD. CEILING SHALL BE ASTM C-840-8 22.6.5 LEVEL 4 FINISH MINIMUM. TO RECEIVE PAINT (PT-01 (COMMON SPACES) PT-10 (APARTMENTS)) U.O.N

C ALL CLOSET CEILINGS SHALL BE ASTM C840-8 22.6.4 LEVEL 3 FINISH OR BETTER TO RECEIVE PAINT (PT-01 (COMMON SPACES) PT-10 (APARTMENTS)) U.O.N

D UNDERSIDE OF ALL EXPOSED SLABS SHALL BE LEFT AS-POURED IN ANTICIPATION OF FUTURE SUSPENDED CEILING.

E REFER TO ELECTRICAL DRAWINGS FOR ELECTRICAL AND DATA LAYOUT AND SYMBOLS LEGEND

F REFER TO LIGHTING SCHEDULE ON A-901.00.

G IN SWITCHED DUPLEX OUTLETS LOWER RECEPTACLE TO BE SWITCH

H REFER TO ELECTRICAL DRAWINGS FOR LIGHTING FIXTURE LAYOUT AND SPECIFICATIONS AT ALL BACK OF HOUSE SPACES

LEGEND

SUSPENDED GYP. BOARD CEILING.

EXPOSED SLAB W/ CONCRETE FINISHING SYSTEM (KADEX)

VERTICAL SHAFT

GYP. BOARD SOFFIT

PERFORATED METAL PANEL

SUSPENDED 2'X4' TILE PANEL CEILING

C1 SCONCE

C2 RECESSED DOWN LIGHTING

C3 4' STRIP LIGHT W/ J.BOX CAST INTO SLAB

C4 2'X4' CEILING RECESSED FIXTURE

LXX STAIRWELL LIGHT

F10 1'X4' PENDANT LIGHTING FIXTURE

U2 2' LED BATH BAR

KEY NOTE LEGEND

1 12" DEEP SMOKE BAFFLE

Client:

RANGER PROPERTIES
4790 BROADWAY
NEW YORK, NY 10034

Architect:

FOGARTY FINGER
architecture | interiors
69 Walker St, New York, NY 10013
t 212 966 7450 f 212 966 7444

Structural:

Thornton Tomasetti
51 Madison Avenue
New York, NY 10010
Tel 917.661.7800

MEP / FP:

Concessi Engineering, PC
499 7th Avenue, 11th Floor South Tower
New York, NY 10018
Tel 212.629.6810

GEOTECH:

FNA Engineering Services, PC
670 Bergen Boulevard, Floor 2
Ridgefield, NJ 07657
Tel 201.241.2444

FACADE:

Simpson Gumpertz & Heger
550 7th Avenue, 10th Floor
New York, NY 10018
Tel 212.271.7000

CODE:

Metropolis
22 Courtland Street, 10th Floor
New York, NY 10007
Tel 212.233.6344

No.	Date	Issue
02	02.06.2019	DD ESTIMATING
01	11.20.2018	SCHEMATIC DESIGN

Project:

4790 BROADWAY
NEW YORK, NY 10034

Drawing Title:

REFLECTED CEILING PLAN 4TH-10TH FLOOR

Seal & Signature:

DATE (MM-DD-YY): 02-05-2019
PROJECT No.:
DRAWING BY: --
CHK BY: --
DWG No.: A-604.00
CADD FILE No.:

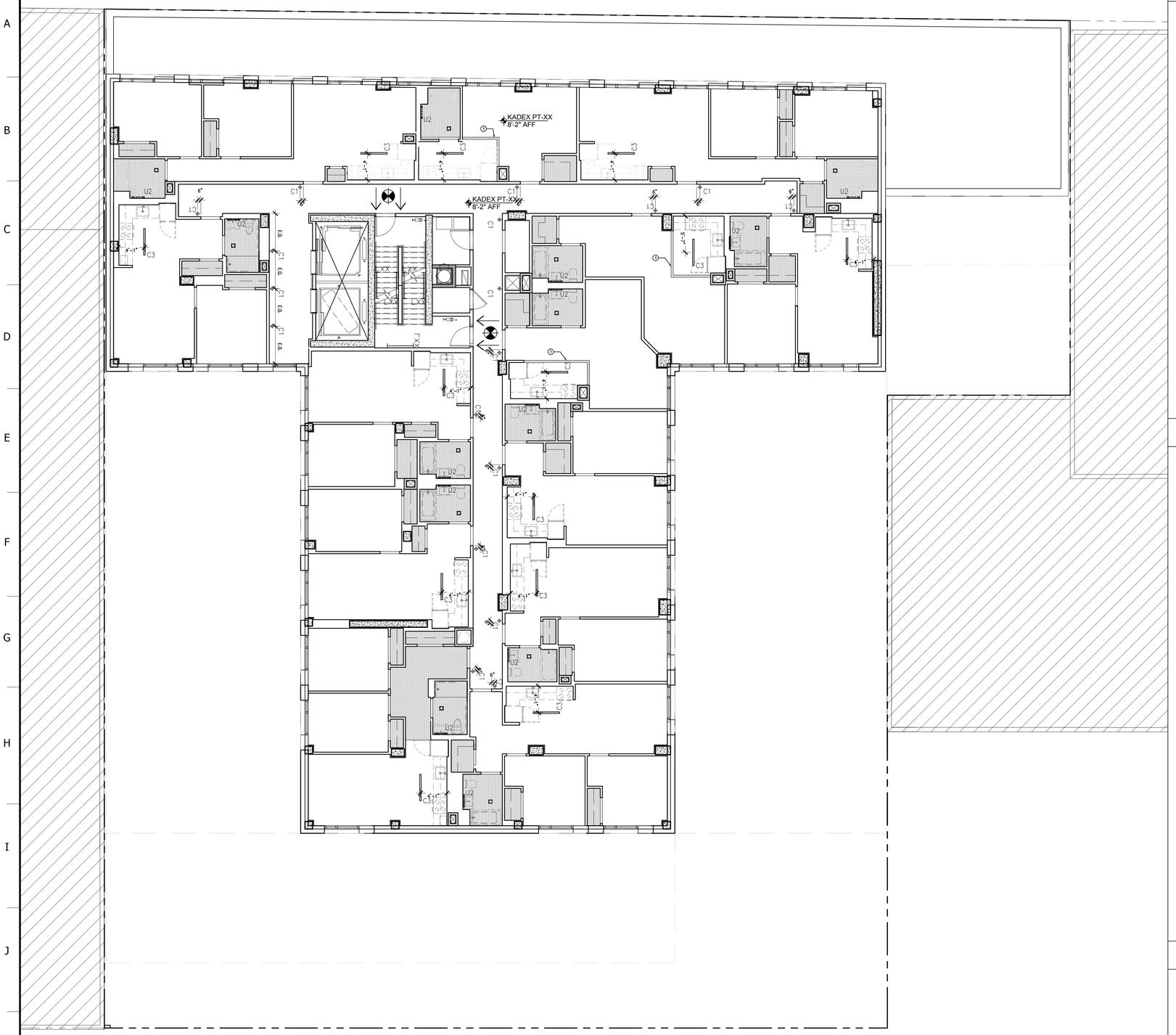

1 ELEVENTH THRU THIRTEENTH FLOOR REFLECTIVE CEILING PLAN
SCALE: 1/8"=1'-0"

GENERAL NOTES

A ALL SPOT ELEVATIONS SHOWN ARE FROM T.O.S.

B ALL GYP. BD. CEILING SHALL BE ASTM C-840-8 22.6.5 LEVEL 4 FINISH MINIMUM. TO RECEIVE PAINT (PT-01 (COMMON SPACES) PT-10 (APARTMENTS)) U.O.N

C ALL CLOSET CEILINGS SHALL BE ASTM C840-8 22.6.4 LEVEL 3 FINISH OR BETTER TO RECEIVE PAINT (PT-01 (COMMON SPACES) PT-10 (APARTMENTS)) U.O.N

D UNDERSIDE OF ALL EXPOSED SLABS SHALL BE LEFT AS-POURED IN ANTICIPATION OF FUTURE SUSPENDED CEILING.

E REFER TO ELECTRICAL DRAWINGS FOR ELECTRICAL AND DATA LAYOUT AND SYMBOLS LEGEND

F REFER TO LIGHTING SCHEDULE ON A-901.00.

G IN SWITCHED DUPLEX OUTLETS LOWER RECEPTACLE TO BE SWITCH

H REFER TO ELECTRICAL DRAWINGS FOR LIGHTING FIXTURE LAYOUT AND SPECIFICATIONS AT ALL BACK OF HOUSE SPACES

LEGEND

SUSPENDED GYP. BOARD CEILING.

EXPOSED SLAB W/ CONCRETE FINISHING SYSTEM (KADEX)

VERTICAL SHAFT

GYP. BOARD SOFFIT

PERFORATED METAL PANEL

SUSPENDED 2'X4' TILE PANEL CEILING

C1 SCONCE

C2 RECESSED DOWN LIGHTING

C3 4' STRIP LIGHT W/ J.BOX CAST INTO SLAB

C4 2'X4' CEILING RECESSED FIXTURE

LXX STAIRWELL LIGHT

F10 1'X4' PENDANT LIGHTING FIXTURE

U2 2' LED BATH BAR

KEY NOTE LEGEND

1 12" DEEP SMOKE BAFFLE

Client:

RANGER PROPERTIES
4790 BROADWAY
NEW YORK, NY 10034

Architect:

FOGARTY FINGER
architecture | interiors
69 Walker St, New York, NY 10013
t 212 966 7450 f 212 966 7444

Structural:

Thornton Tomasetti
51 Madison Avenue
New York, NY 10010
Tel 917.661.7800

MEP / FP:

Concessi Engineering, PC
499 7th Avenue, 11th Floor South Tower
New York, NY 10018
Tel 212.629.6810

GEOTECH:

FNA Engineering Services, PC
670 Bergen Boulevard, Floor 2
Ridgefield, NJ 07657
Tel 201.241.2444

FACADE:

Simpson Gumpertz & Heger
550 7th Avenue, 10th Floor
New York, NY 10018
Tel 212.271.7000

CODE:

Metropolis
22 Courtland Street, 10th Floor
New York, NY 10007
Tel 212.233.6344

No.	Date	Issue
02	02.06.2019	DD ESTIMATING
01	11.20.2018	SCHEMATIC DESIGN

Project:

4790 BROADWAY
NEW YORK, NY 10034

Drawing Title:

REFLECTED CEILING PLAN 11TH-13TH FLOOR

Seal & Signature:

DATE (MM-DD-YY): 02-05-2019
PROJECT No.:
DRAWING BY: --
CHK BY: --
DWG No.: A-605.00
CADD FILE No.:

1 FOURTEENTH FLOOR REFLECTIVE CEILING PLAN

SCALE: 1/8"=1'-0"

GENERAL NOTES

A ALL SPOT ELEVATIONS SHOWN ARE FROM T.O.S.

B ALL GYP. BD. CEILING SHALL BE ASTM C-840-8 22.6.5 LEVEL 4 FINISH MINIMUM. TO RECEIVE PAINT (PT-01 (COMMON SPACES) PT-10 (APARTMENTS)) U.O.N

C ALL CLOSET CEILINGS SHALL BE ASTM C840-8 22.6.4 LEVEL 3 FINISH OR BETTER TO RECEIVE PAINT (PT-01 (COMMON SPACES) PT-10 (APARTMENTS)) U.O.N

D UNDERSIDE OF ALL EXPOSED SLABS SHALL BE LEFT AS-POURED IN ANTICIPATION OF FUTURE SUSPENDED CEILING.

E REFER TO ELECTRICAL DRAWINGS FOR ELECTRICAL AND DATA LAYOUT AND SYMBOLS LEGEND

F REFER TO LIGHTING SCHEDULE ON A-901.00.

G IN SWITCHED DUPLEX OUTLETS LOWER RECEPTACLE TO BE SWITCH

H REFER TO ELECTRICAL DRAWINGS FOR LIGHTING FIXTURE LAYOUT AND SPECIFICATIONS AT ALL BACK OF HOUSE SPACES

LEGEND

SUSPENDED GYP. BOARD CEILING.

EXPOSED SLAB W/ CONCRETE FINISHING SYSTEM (KADEX)

VERTICAL SHAFT

GYP. BOARD SOFFIT

PERFORATED METAL PANEL

SUSPENDED 2'X4' TILE PANEL CEILING

C1 SCONCE

C2 RECESSED DOWN LIGHTING

C3 4' STRIP LIGHT W/ J.BOX CAST INTO SLAB

C4 2'X4' CEILING RECESSED FIXTURE

LXX STAIRWELL LIGHT

F10 1'X4' PENDANT LIGHTING FIXTURE

U2 2' LED BATH BAR

KEY NOTE LEGEND

1 12" DEEP SMOKE BAFFLE

Client:

RANGER PROPERTIES
4790 BROADWAY
NEW YORK, NY 10034

Architect:

FOGARTY FINGER
architecture | interiors
69 Walker St, New York, NY 10013
t 212 966 7450 f 212 966 7444

Structural:

Thornton Tomasetti
51 Madison Avenue
New York, NY 10010
Tel 917.661.7800

MEP / FP:

Concessi Engineering, PC
499 7th Avenue, 11th Floor South Tower
New York, NY 10018
Tel 212.629.6810

GEOTECH:

FNA Engineering Services, PC
670 Bergen Boulevard, Floor 2
Ridgefield, NJ 07657
Tel 201.241.2444

FACADE:

Simpson Gumpertz & Heger
550 7th Avenue, 10th Floor
New York, NY 10018
Tel 212.271.7000

CODE:

Metropolis
22 Courtland Street, 10th Floor
New York, NY 10007
Tel 212.233.6344

No.	Date	Issue
02	02.06.2019	DD ESTIMATING
01	11.20.2018	SCHEMATIC DESIGN

Project:

4790 BROADWAY
NEW YORK, NY 10034

Drawing Title:

REFLECTED CEILING PLAN 14TH FLOOR

Seal & Signature:

DATE (MM-DD-YY): 02-05-2019
PROJECT No.:
DRAWING BY: ...
CHK BY: ...
DWG. No.: A-606.00
CADD FILE No.:

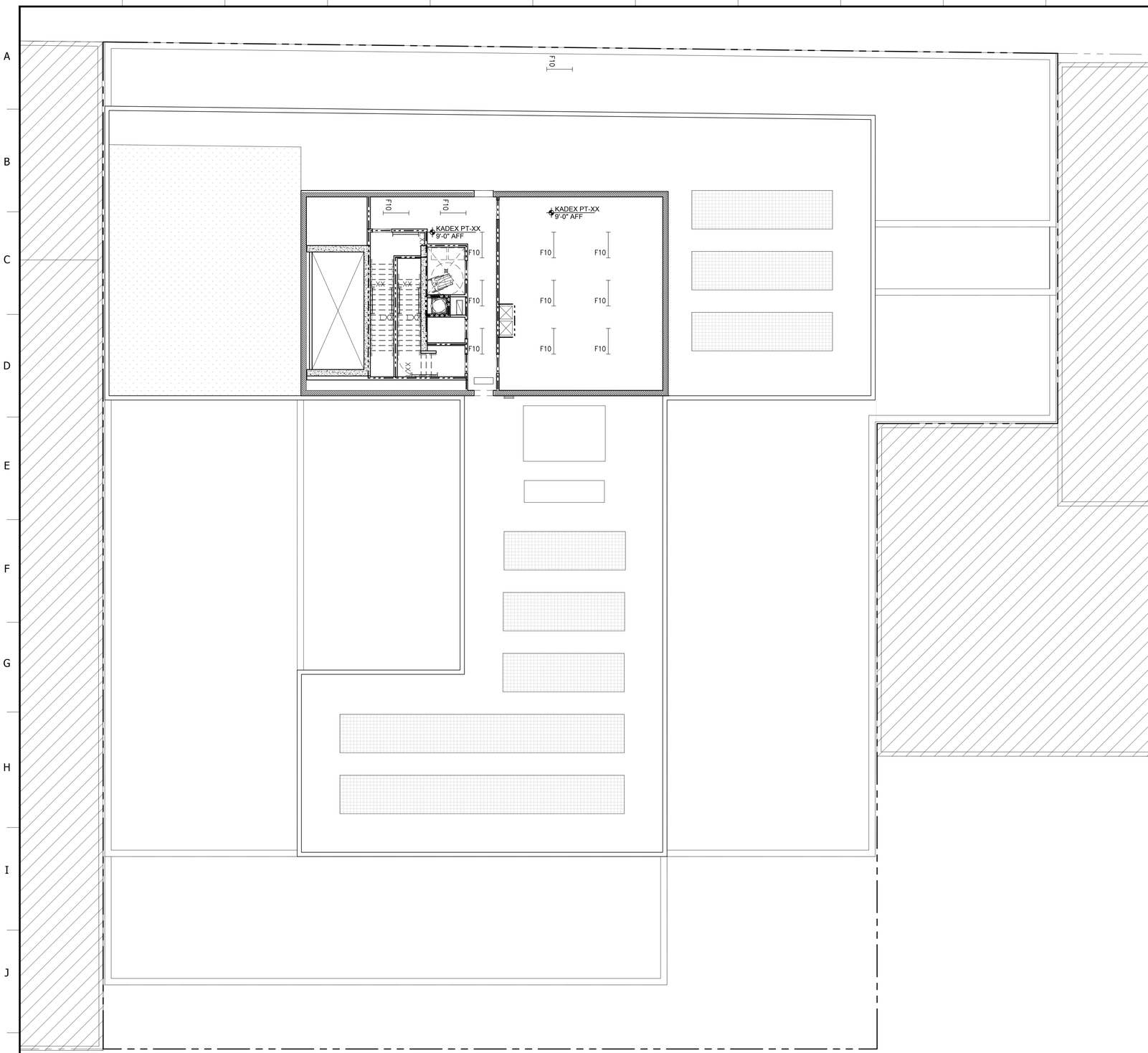

1 BULKHEAD FLOOR REFLECTIVE CEILING PLAN
SCALE: 1/8"=1'-0"

GENERAL NOTES

A ALL SPOT ELEVATIONS SHOWN ARE FROM T.O.S.

B ALL GYP. BD. CEILING SHALL BE ASTM C-840-8 22.6.5 LEVEL 4 FINISH MINIMUM. TO RECEIVE PAINT (PT-01 (COMMON SPACES) PT-10 (APARTMENTS)) U.O.N

C ALL CLOSET CEILINGS SHALL BE ASTM C840-8 22.6.4 LEVEL 3 FINISH OR BETTER TO RECEIVE PAINT (PT-01 (COMMON SPACES) PT-10 (APARTMENTS)) U.O.N

D UNDERSIDE OF ALL EXPOSED SLABS SHALL BE LEFT AS-POURED IN ANTICIPATION OF FUTURE SUSPENDED CEILING.

E REFER TO ELECTRICAL DRAWINGS FOR ELECTRICAL AND DATA LAYOUT AND SYMBOLS LEGEND

F REFER TO LIGHTING SCHEDULE ON A-901.00.

G IN SWITCHED DUPLEX OUTLETS LOWER RECEPTACLE TO BE SWITCH

H REFER TO ELECTRICAL DRAWINGS FOR LIGHTING FIXTURE LAYOUT AND SPECIFICATIONS AT ALL BACK OF HOUSE SPACES

LEGEND

SUSPENDED GYP. BOARD CEILING.

EXPOSED SLAB W/ CONCRETE FINISHING SYSTEM (KADEX)

VERTICAL SHAFT

GYP. BOARD SOFFIT

PERFORATED METAL PANEL

SUSPENDED 2'X4' TILE PANEL CEILING

C1 SCONCE

C2 RECESSED DOWN LIGHTING

C3 4' STRIP LIGHT W/ J.BOX CAST INTO SLAB

C4 2'X4' CEILING RECESSED FIXTURE

LXX STAIRWELL LIGHT

F10 1'X4' PENDANT LIGHTING FIXTURE

U2 2' LED BATH BAR

KEY NOTE LEGEND

1 12" DEEP SMOKE BAFFLE

Client:

RANGER PROPERTIES
4790 BROADWAY
NEW YORK, NY 10034

Architect:

FOGARTY FINGER
architecture | interiors
69 Walker St, New York, NY 10013
t 212 966 7450 f 212 966 7444

Structural:

Thornton Tomasetti
51 Madison Avenue
New York, NY 10010
Tel 917.661.7800

MEP / FP:

Concessi Engineering, PC
499 7th Avenue, 11th Floor South Tower
New York, NY 10018
Tel 212.629.6810

GEOTECH:

FNA Engineering Services, PC
670 Bergen Boulevard, Floor 2
Ridgefield, NJ 07657
Tel 201.241.2444

FACADE:

Simpson Gumpertz & Heger
550 7th Avenue, 10th Floor
New York, NY 10018
Tel 212.271.7000

CODE:

Metropolis
22 Courtland Street, 10th Floor
New York, NY 10007
Tel 212.233.6344

No.	Date	Issue
02	02.06.2019	DD ESTIMATING
01	11.20.2018	SCHEMATIC DESIGN

Project:

4790 BROADWAY
NEW YORK, NY 10034

Drawing Title:

REFLECTED CEILING PLAN ROOF PLAN

Seal & Signature:

DATE (MM-DD-YY): 02-05-2019
PROJECT No.:
DRAWING BY: –
CHK BY: –
DWG. No.:
A-607.00
CADD FILE No.:

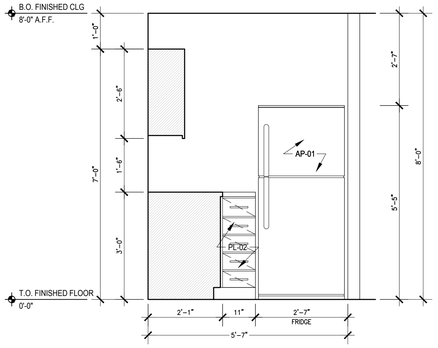

KITCHEN TYPE K2 | 1
SCALE: 1/2"=1'-0"

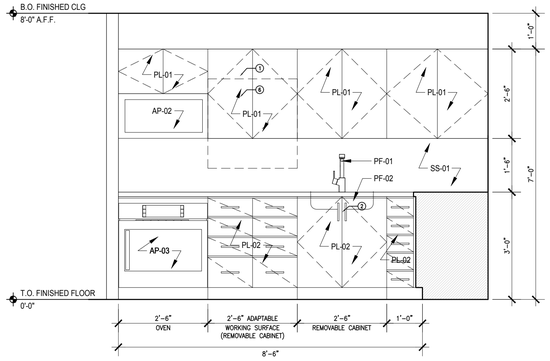

KITCHEN TYPE K2 | 2
SCALE: 1/2"=1'-0"

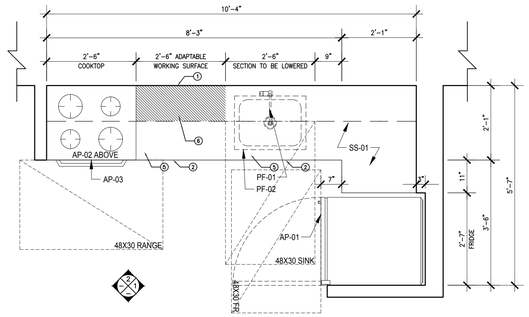

KITCHEN TYPE K2 | 3
SCALE: 1/2"=1'-0"

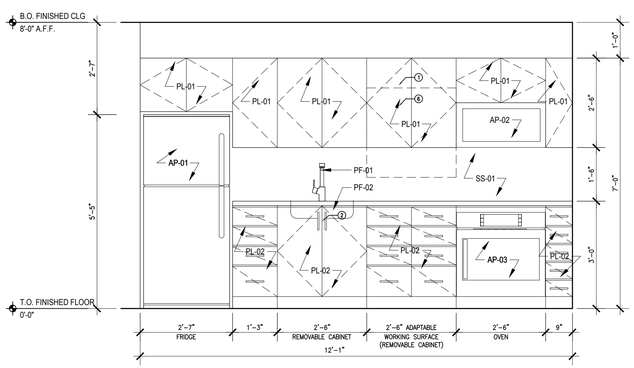

KITCHEN TYPE K1 | 4
SCALE: 1/2"=1'-0"

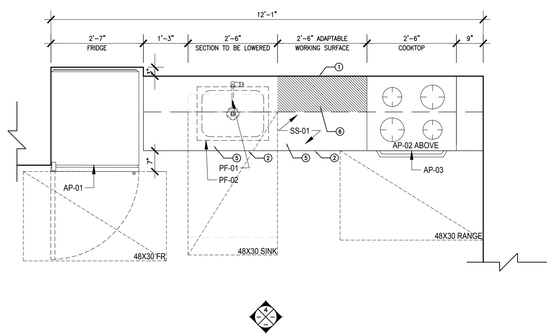

KITCHEN TYPE K1 | 5
SCALE: 1/2"=1'-0"

KEY NOTES:

1. H/C ADAPTABLE UPPER CABINETS PER ADA REQUIREMENTS
2. REMOVABLE CABINETS UNDER COUNTERTOP FOR FUTURE ACCESSIBILITY
3. CLEAR FLOOR SPACE FOR FUTURE WHEELCHAIR TURNING RADIUS
4. 30"X30" FUTURE ADAPTABLE WORKING SURFACE AT 2'-10" AS NEEDED FOR HANDICAP ACCESSIBILITY
5. SECTION OF COUNTERTOP TO BE LOWERED TO 2'-10" AS NEEDED FOR HANDICAP ACCESSIBILITY
6. DROP CABINETS TO 3'-8" A.F.F. AS NEEDED FOR HANDICAP USE

APPLIANCES, FIXTURES & FNISHES:

APPLIANCES:

1. AP-01
   GE ENERGY STAR 11.6 CU. FT. TOP-FREEZER REFRIGERATOR OR EQ.
2. AP-02
   GE 16 CU. FT. OVER RANGE MICROWAVE OVEN OR EQ.
3. AP-03
   SUMMIT TTM21027BRSW 36"X30"X24" RANGE OR EQ.
4. AP-04
   WHIRLPOOL UNDERCOUNTER 24"X30"X21" DISHWASHER OR EQ.
5. AP-05
   GE 0.7 CU FT CAPACITY COUNTERTOP MICROWAVE OVEN OR EQ.
6. AP-06
   SUMMIT H1630SS 5"X30"X18" RANGE HOOD OR EQ.

PLUMBING FIXTURES:

1. PF-01
   PEERLESS P110LF 8"LX7 $\frac{1}{2}$"H KITCHEN FAUCET OR EQ.
2. PF-02
   ELKAY LUSTERTONE CLASSIC STAINLESS STEEL 23 $\frac{1}{2}$"X18 $\frac{1}{2}$"X 5 $\frac{1}{2}$" SINGLE BOWL UNDERMOUNT ADA SINK OR EQ.

Client:

RANGER PROPERTIES
4790 BROADWAY
NEW YORK, NY 10034

Architect:

FOGARTY FINGER
architecture | interiors

69 Walker St, New York, NY 10013
t 212 966 7450 f 212 966 7444

Structural:

Thornton Tomasetti
51 Madison Avenue
New York, NY 10010
Tel 917.661.7800

MEP / FP:

Concessi Engineering, PC
499 7th Avenue, 11th Floor South Tower
New York, NY 10018
Tel 212.629.6810

GEOTECH:

FNA Engineering Services, PC
670 Bergen Boulevard, Floor 2
Ridgefield, NJ 07657
Tel 201.241.2444

FACADE:

Simpson Gumpertz & Heger
550 7th Avenue, 10th Floor
New York, NY 10018
Tel 212.271.7000

CODE:

Metropolis
22 Courtland Street, 10th Floor
New York, NY 10007
Tel 212.233.6344

No.	Date	Issue
02	02.06.2019	DD ESTIMATING
01	11.20.2018	SCHEMATIC DESIGN

Project:

4790 BROADWAY
NEW YORK, NY 10034

Drawing Title:

KITCHEN PLANS & ELEVATIONS

Seal & Signature:

DATE (MM-DD-YY): 02-05-2019
PROJECT No.:
DRAWING BY: ...
CHK BY: ...
DWG. No.: A-800.00
CADD FILE No.:

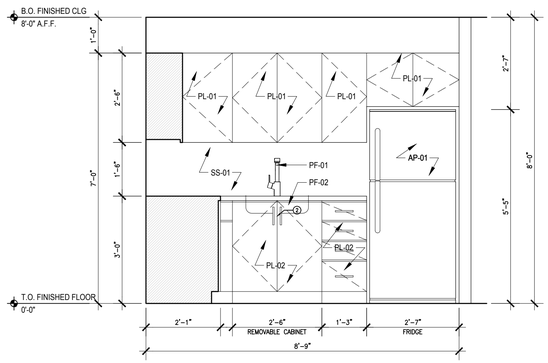

KITCHEN TYPE K3 | 1
SCALE: 1/2"=1'-0"

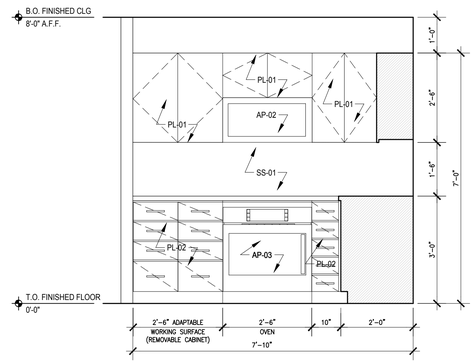

KITCHEN TYPE K3 | 2
SCALE: 1/2"=1'-0"

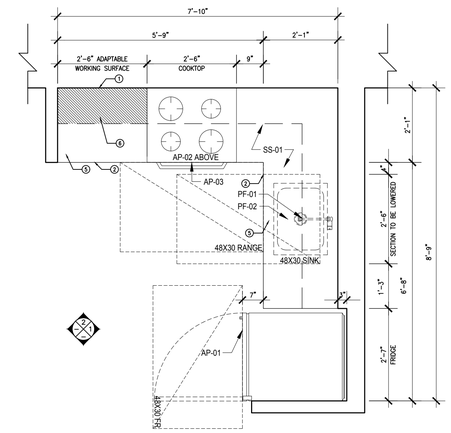

KITCHEN TYPE K3 | 3
SCALE: 1/2"=1'-0"

NOT USED

KEY NOTES:

1. H/C ADAPTABLE UPPER CABINETS PER ADA REQUIREMENTS
2. REMOVABLE CABINETS UNDER COUNTERTOP FOR FUTURE ACCESSIBILITY
3. CLEAR FLOOR SPACE FOR FUTURE WHEELCHAIR TURNING RADIUS
4. 30"X30" FUTURE ADAPTABLE WORKING SURFACE AT 2'-10" AS NEEDED FOR HANDICAP ACCESSIBILITY
5. SECTION OF COUNTERTOP TO BE LOWERED TO 2'-10" AS NEEDED FOR HANDICAP ACCESSIBILITY
6. DROP CABINETS TO 3'-8" A.F.F. AS NEEDED FOR HANDICAP USE

APPLIANCES, FIXTURES & FNISHES:

APPLIANCES:

1. AP-01
   GE ENERGY STAR 11.6 CU. FT. TOP-FREEZER REFRIGERATOR OR EQ.
2. AP-02
   GE 16 CU. FT. OVER RANGE MICROWAVE OVEN OR EQ.
3. AP-03
   SUMMIT TTM21027BRSW 36"X30"X24" RANGE OR EQ.
4. AP-04
   WHIRLPOOL UNDERCOUNTER 24"X30"X21" DISHWASHER OR EQ.
5. AP-05
   GE 0.7 CU FT CAPACITY COUNTERTOP MICROWAVE OVEN OR EQ.
6. AP-06
   SUMMIT H1630SS 5"X30"X18" RANGE HOOD OR EQ.

PLUMBING FIXTURES:

1. PF-01
   PEERLESS P110LF 8"LX7 $\frac{1}{2}$"H KITCHEN FAUCET OR EQ.
2. PF-02
   ELKAY LUSTERTONE CLASSIC STAINLESS STEEL 23 $\frac{1}{2}$"X18 $\frac{1}{2}$"X 5 $\frac{1}{2}$" SINGLE BOWL UNDERMOUNT ADA SINK OR EQ.

Client:

RANGER PROPERTIES
4790 BROADWAY
NEW YORK, NY 10034

Architect:

FOGARTY FINGER
architecture | interiors

69 Walker St, New York, NY 10013
t 212 966 7450 f 212 966 7444

Structural:

Thornton Tomasetti
51 Madison Avenue
New York, NY 10010
Tel 917.661.7800

MEP / FP:

Concessi Engineering, PC
499 7th Avenue, 11th Floor South Tower
New York, NY 10018
Tel 212.629.6810

GEOTECH:

FNA Engineering Services, PC
670 Bergen Boulevard, Floor 2
Ridgefield, NJ 07657
Tel 201.241.2444

FACADE:

Simpson Gumpertz & Heger
550 7th Avenue, 10th Floor
New York, NY 10018
Tel 212.271.7000

CODE:

Metropolis
22 Courtland Street, 10th Floor
New York, NY 10007
Tel 212.233.6344

No.	Date	Issue
02	02.06.2019	DD ESTIMATING
01	11.20.2018	SCHEMATIC DESIGN

Project:

4790 BROADWAY
NEW YORK, NY 10034

Drawing Title:

KITCHEN PLANS & ELEVATIONS

Seal & Signature:

DATE (MM-DD-YY): 02-05-2019
PROJECT No.:
DRAWING BY: --
CHK BY: --
DWG. No.: A-801.00
CADD FILE No.:

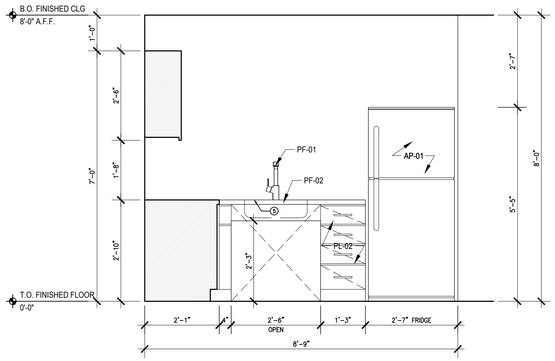

UFAS KITCHEN TYPE K4U 1
SCALE: 1/2"=1'-0"

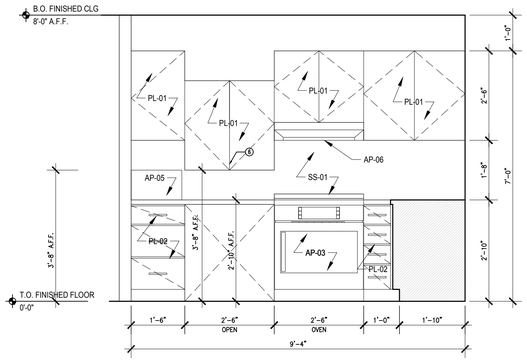

UFAS KITCHEN TYPE K4U 2
SCALE: 1/2"=1'-0"

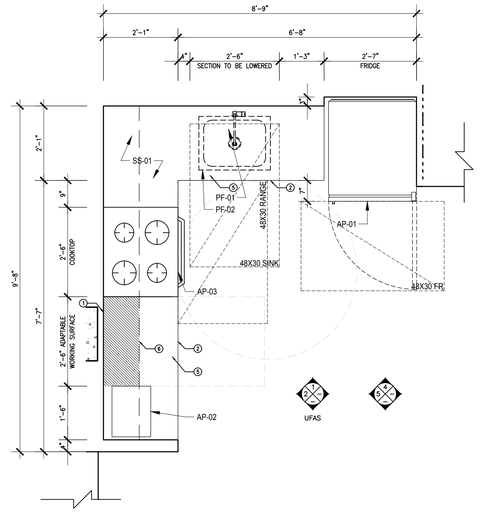

KITCHEN TYPE K4 / K4U 3
SCALE: 1/2"=1'-0"

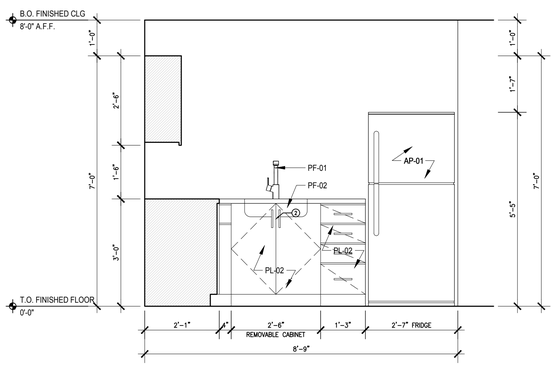

KITCHEN TYPE K4 4
SCALE: 1/2"=1'-0"

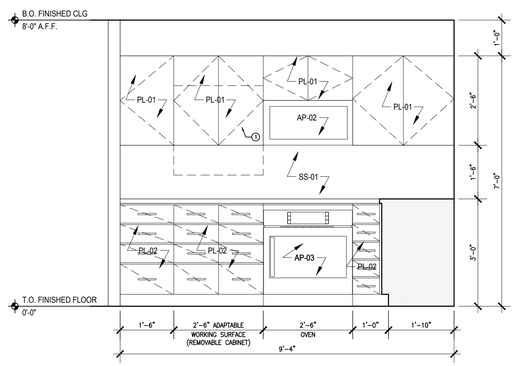

KITCHEN TYPE K4 5
SCALE: 1/2"=1'-0"

KITCHEN SCHEDULE 6
SCALE: N.T.S.

KEY NOTES:

1. H/C ADAPTABLE UPPER CABINETS PER ADA REQUIREMENTS
2. REMOVABLE CABINETS UNDER COUNTERTOP FOR ACCESSIBILITY
3. CLEAR FLOOR SPACE FOR WHEELCHAIR TURNING RADIUS
4. 30"X30" WORKING SURFACE AT 2'-10" AS NEEDED FOR HANDICAP ACCESSIBILITY
5. SECTION OF COUNTERTOP LOWERED TO 2'-10" AS NEEDED FOR HANDICAP ACCESSIBILITY
6. DROPPED CABINETS TO 3'-8" A.F.F. AS NEEDED FOR HANDICAP USE
7. SHELF TO BE MOUNTED ON TOP OF 30" WORK SURFACE AS NEEDED, UFAS UNITS ONLY
8. BASE CABINETS TO BE REMOVED UNDER 30" WORKING SURFACE

APPLIANCES, FIXTURES & FNISHES:

APPLIANCES:

1. AP-01
GE ENERGY STAR 11.6 CU. FT. TOP-FREEZER REFRIGERATOR OR EQ.
2. AP-02
GE 16 CU. FT. OVER RANGE MICROWAVE OVEN OR EQ.
3. AP-03
SUMMIT TTM21027BRSW 36"X30"X24" RANGE OR EQ.
4. AP-04
WHIRLPOOL UNDERCOUNTER 24"X30"X21" DISHWASHER OR EQ.
5. AP-05
GE 0.7 CU FT CAPACITY COUNTERTOP MICROWAVE OVEN OR EQ.
6. AP-06
SUMMIT H1630SS 5"X30"X18" RANGE HOOD OR EQ.

PLUMBING FIXTURES:

1. PF-01
PEERLESS P110LF 8"LX7 $\frac{1}{2}$"H KITCHEN FAUCET OR EQ.
2. PF-02
ELKAY LUSTERTONE CLASSIC STAINLESS STEEL 23 $\frac{1}{2}$"X18 $\frac{1}{2}$"X 5 $\frac{1}{2}$" SINGLE BOWL UNDERMOUNT ADA SINK OR EQ.

Client:

RANGER PROPERTIES
4790 BROADWAY
NEW YORK, NY 10034

Architect:

FOGARTY FINGER
architecture | interiors

69 Walker St, New York, NY 10013
t 212 966 7450 f 212 966 7444

Structural:

Thornton Tomasetti
51 Madison Avenue
New York, NY 10010
Tel 917.661.7800

MEP / FP:

Concessi Engineering, PC
499 7th Avenue, 11th Floor South Tower
New York, NY 10018
Tel 212.629.6810

GEOTECH:

FNA Engineering Services, PC
670 Bergen Boulevard, Floor 2
Ridgefield, NJ 07657
Tel 201.241.2444

FACADE:

Simpson Gumpertz & Heger
550 7th Avenue, 10th Floor
New York, NY 10018
Tel 212.271.7000

CODE:

Metropolis
22 Courtland Street, 10th Floor
New York, NY 10007
Tel 212.233.6344

No.	Date	Issue
02	02.06.2019	DD ESTIMATING
01	11.20.2018	SCHEMATIC DESIGN

Project:

4790 BROADWAY
NEW YORK, NY 10034

Drawing Title:

KITCHEN PLANS & ELEVATIONS

Seal & Signature:

DATE (MM-DD-YY): 02-05-2019
PROJECT No.:
DRAWING BY: ...
CHK BY: ...
DWG. No.: A-802.00
CADD FILE No.:

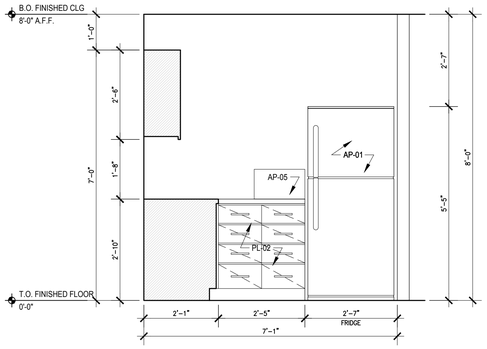

UFAS KITCHEN TYPE K5U 1
SCALE: 1/2"=1'-0"

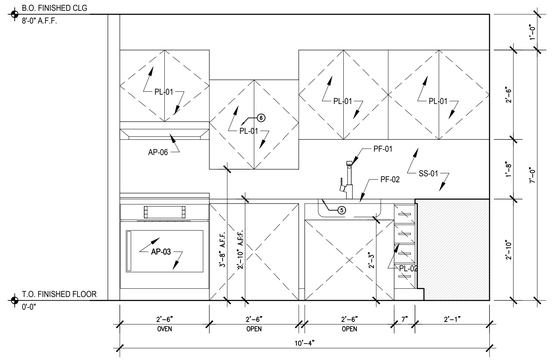

UFAS KITCHEN TYPE K5U 2
SCALE: 1/2"=1'-0"

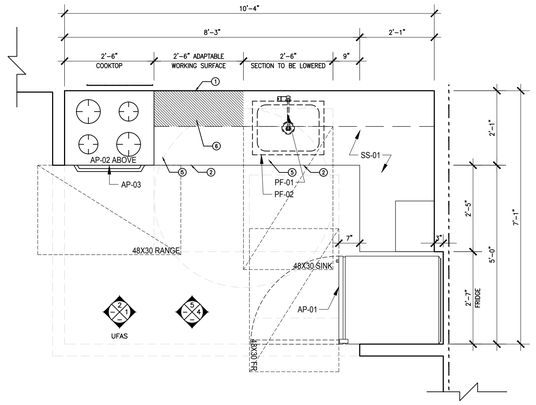

KITCHEN TYPE K5 / K5U 3
SCALE: 1/2"=1'-0"

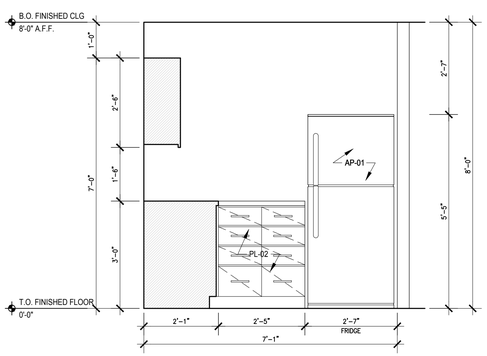

KITCHEN TYPE K5 4
SCALE: 1/2"=1'-0"

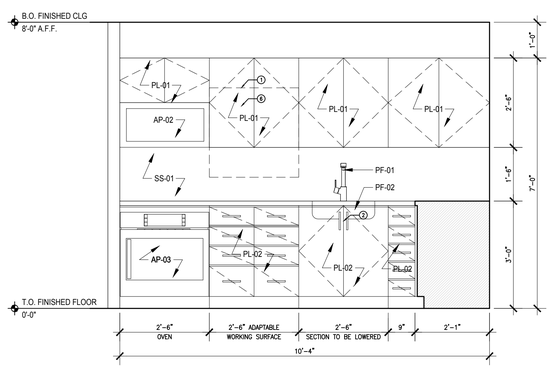

KITCHEN TYPE K5 5
SCALE: 1/2"=1'-0"

KITCHEN SCHEDULE 6
SCALE: N.T.S.

KEY NOTES:

1. H/C ADAPTABLE UPPER CABINETS PER ADA REQUIREMENTS
2. REMOVABLE CABINETS UNDER COUNTERTOP FOR ACCESSIBILITY
3. CLEAR FLOOR SPACE FOR WHEELCHAIR TURNING RADIUS
4. 30"X30" WORKING SURFACE AT Z'-10" AS NEEDED FOR HANDICAP ACCESSIBILITY
5. SECTION OF COUNTERTOP LOWERED TO Z'-10" AS NEEDED FOR HANDICAP ACCESSIBILITY
6. DROPPED CABINETS TO 3'-8" A.F.F. AS NEEDED FOR HANDICAP USE
7. SHELF TO BE MOUNTED ON TOP OF 30" WORK SURFACE AS NEEDED, UFAS UNITS ONLY
8. BASE CABINETS TO BE REMOVED UNDER 30" WORKING SURFACE

APPLIANCES, FIXTURES & FNISHES:

APPLIANCES:

1. AP-01
   GE ENERGY STAR 11.6 CU. FT. TOP-FREEZER REFRIGERATOR OR EQ.
2. AP-02
   GE 16 CU. FT. OVER RANGE MICROWAVE OVEN OR EQ.
3. AP-03
   SUMMIT TTM21027BRSW 36"X30"X24" RANGE OR EQ.
4. AP-04
   WHIRLPOOL UNDERCOUNTER 24"X30"X21" DISHWASHER OR EQ.
5. AP-05
   GE 0.7 CU FT CAPACITY COUNTERTOP MICROWAVE OVEN OR EQ.
6. AP-06
   SUMMIT H1630SS 5"X30"X18" RANGE HOOD OR EQ.

PLUMBING FIXTURES:

1. PF-01
   PEERLESS P110LF 8"LX7 $\frac{1}{2}$"H KITCHEN FAUCET OR EQ.
2. PF-02
   ELKAY LUSTERTONE CLASSIC STAINLESS STEEL 23-$\frac{1}{2}$"X18 $\frac{1}{2}$"X 5 $\frac{1}{2}$" SINGLE BOWL UNDERMOUNT ADA SINK OR EQ.

Client:

RANGER PROPERTIES
4790 BROADWAY
NEW YORK, NY 10034

Architect:

FOGARTY FINGER
architecture | interiors

69 Walker St, New York, NY 10013
t 212 966 7450 f 212 966 7444

Structural:

Thornton Tomasetti
51 Madison Avenue
New York, NY 10010
Tel 917.661.7800

MEP / FP:

Concessi Engineering, PC
499 7th Avenue, 11th Floor South Tower
New York, NY 10018
Tel 212.629.6810

GEOTECH:

FNA Engineering Services, PC
670 Bergen Boulevard, Floor 2
Ridgefield, NJ 07657
Tel 201.241.2444

FACADE:

Simpson Gumpertz & Heger
550 7th Avenue, 10th Floor
New York, NY 10018
Tel 212.271.7000

CODE:

Metropolis
22 Courtland Street, 10th Floor
New York, NY 10007
Tel 212.233.6344

No.	Date	Issue
02	02.06.2019	DD ESTIMATING
01	11.20.2018	SCHEMATIC DESIGN

Project:

4790 BROADWAY
NEW YORK, NY 10034

Drawing Title:

KITCHEN PLANS & ELEVATIONS

Seal & Signature:

DATE (MM-DD-YY): 02-05-2019
PROJECT No.:
DRAWING BY: ...
CHK BY: ...
DWG. No.: A-803.00
CADD FILE No.:

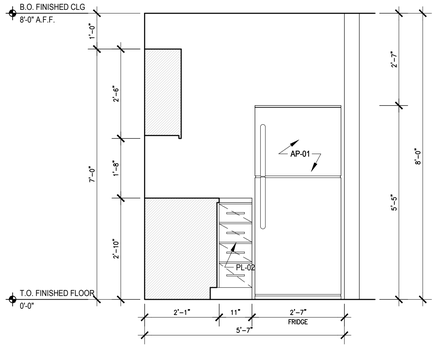

UFAS KITCHEN TYPE K6U 1
SCALE: 1/2"=1'-0"

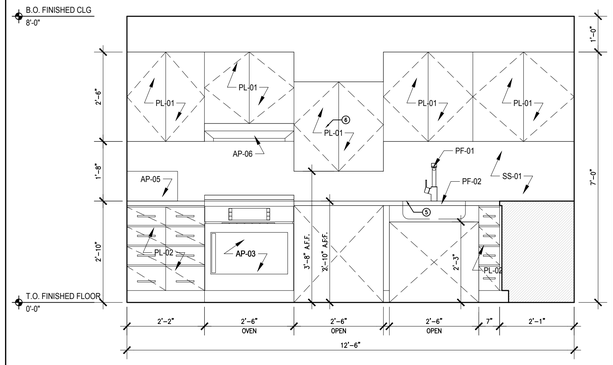

UFAS KITCHEN TYPE K6U 2
SCALE: 1/2"=1'-0"

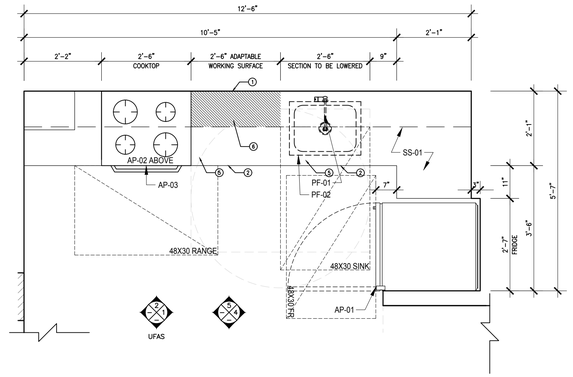

KITCHEN TYPE K6 / K6U 3
SCALE: 1/2"=1'-0"

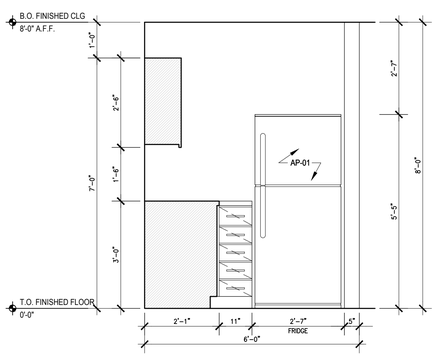

KITCHEN TYPE K6 4
SCALE: 1/2"=1'-0"

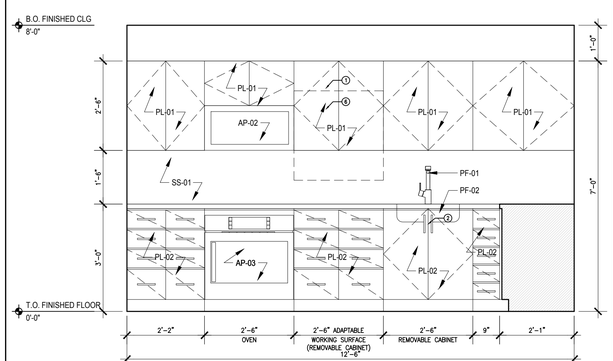

KITCHEN TYPE K6 5
SCALE: 1/2"=1'-0"

KITCHEN SCHEDULE 6
SCALE: N.T.S.

KEY NOTES:

1. H/C ADAPTABLE UPPER CABINETS PER ADA REQUIREMENTS
2. REMOVABLE CABINETS UNDER COUNTERTOP FOR ACCESSIBILITY
3. CLEAR FLOOR SPACE FOR WHEELCHAIR TURNING RADIUS
4. 30"X30" WORKING SURFACE AT Z'-10" AS NEEDED FOR HANDICAP ACCESSIBILITY
5. SECTION OF COUNTERTOP LOWERED TO Z'-10" AS NEEDED FOR HANDICAP ACCESSIBILITY
6. DROPPED CABINETS TO 3'-8" A.F.F. AS NEEDED FOR HANDICAP USE
7. SHELF TO BE MOUNTED ON TOP OF 30" WORK SURFACE AS NEEDED, UFAS UNITS ONLY
8. BASE CABINETS TO BE REMOVED UNDER 30" WORKING SURFACE

APPLIANCES, FIXTURES & FNISHES:

APPLIANCES:

1. AP-01
   GE ENERGY STAR 11.6 CU. FT. TOP-FREEZER REFRIGERATOR OR EQ.
2. AP-02
   GE 16 CU. FT. OVER RANGE MICROWAVE OVEN OR EQ.
3. AP-03
   SUMMIT TTM21027BRSW 36"X30"X24" RANGE OR EQ.
4. AP-04
   WHIRLPOOL UNDERCOUNTER 24"X30"X21" DISHWASHER OR EQ.
5. AP-05
   GE 0.7 CU FT CAPACITY COUNTERTOP MICROWAVE OVEN OR EQ.
6. AP-06
   SUMMIT H1630SS 5"X30"X18" RANGE HOOD OR EQ.

PLUMBING FIXTURES:

1. PF-01
   PEERLESS P110LF 8"LX7 $\frac{1}{2}$"H KITCHEN FAUCET OR EQ.
2. PF-02
   ELKAY LUSTERTONE CLASSIC STAINLESS STEEL 23-$\frac{1}{2}$"X18 $\frac{1}{2}$"X 5 $\frac{1}{2}$" SINGLE BOWL UNDERMOUNT ADA SINK OR EQ.

Client:

RANGER PROPERTIES
4790 BROADWAY
NEW YORK, NY 10034

Architect:

FOGARTY FINGER
architecture | interiors

69 Walker St, New York, NY 10013
t 212 966 7450 f 212 966 7444

Structural:

Thornton Tomasetti
51 Madison Avenue
New York, NY 10010
Tel 917.661.7800

MEP / FP:

Concessi Engineering, PC
499 7th Avenue, 11th Floor South Tower
New York, NY 10018
Tel 212.629.6810

GEOTECH:

FNA Engineering Services, PC
670 Bergen Boulevard, Floor 2
Ridgefield, NJ 07657
Tel 201.241.2444

FACADE:

Simpson Gumpertz & Heger
550 7th Avenue, 10th Floor
New York, NY 10018
Tel 212.271.7000

CODE:

Metropolis
22 Courtland Street, 10th Floor
New York, NY 10007
Tel 212.233.6344

No.	Date	Issue
02	02.06.2019	DD ESTIMATING
01	11.20.2018	SCHEMATIC DESIGN

Project:

4790 BROADWAY
NEW YORK, NY 10034

Drawing Title:

KITCHEN PLANS & ELEVATIONS

Seal & Signature:

DATE (MM-DD-YY): 02-05-2019
PROJECT No.:
DRAWING BY: ...
CHK BY: ...
DWG. No.: A-804.00
CADD FILE No.:

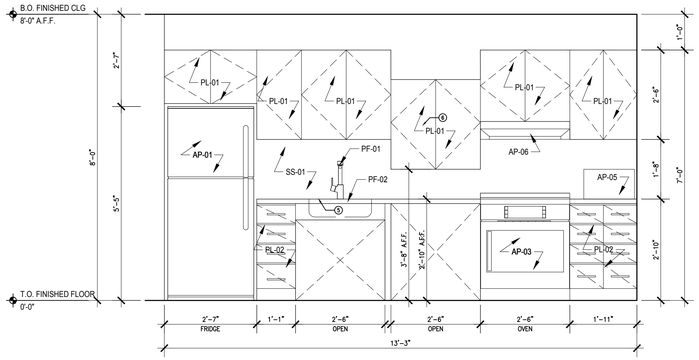

UFAS KITCHEN TYPE K7U
SCALE: 1/2"=1'-0"
1

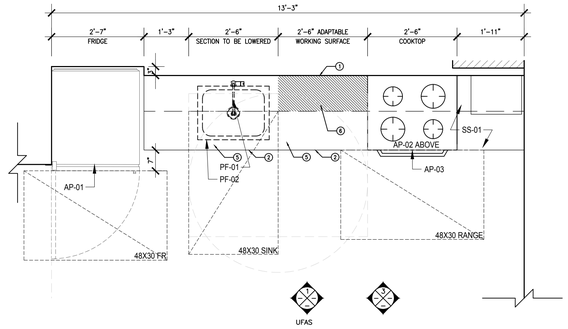

KITCHEN TYPE K7 / K7U
SCALE: 1/2"=1'-0"
2

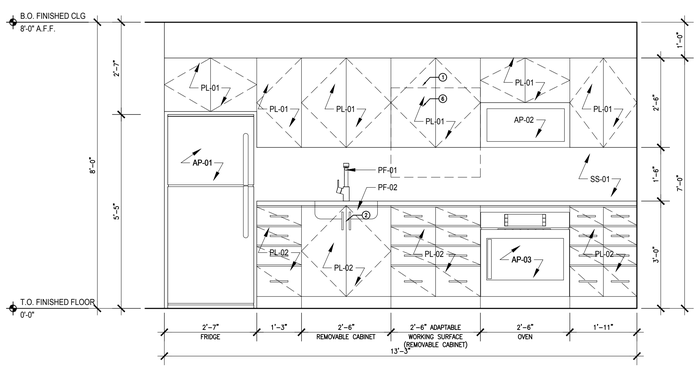

KITCHEN TYPE K7
SCALE: 1/2"=1'-0"
3

KITCHEN SCHEDULE
SCALE: N.T.S.
6

KEY NOTES:

1. H/C ADAPTABLE UPPER CABINETS PER ADA REQUIREMENTS
2. REMOVABLE CABINETS UNDER COUNTERTOP FOR ACCESSIBILITY
3. CLEAR FLOOR SPACE FOR WHEELCHAIR TURNING RADIUS
4. 30"X30" WORKING SURFACE AT 2'-10" AS NEEDED FOR HANDICAP ACCESSIBILITY
5. SECTION OF COUNTERTOP LOWERED TO 2'-10" AS NEEDED FOR HANDICAP ACCESSIBILITY
6. DROPPED CABINETS TO 3'-8" A.F.F. AS NEEDED FOR HANDICAP USE
7. SHELF TO BE MOUNTED ON TOP OF 30" WORK SURFACE AS NEEDED, UFAS UNITS ONLY
8. BASE CABINETS TO BE REMOVED UNDER 30" WORKING SURFACE

APPLIANCES, FIXTURES & FNISHES:

APPLIANCES:

1. AP-01
   GE ENERGY STAR 11.6 CU. FT. TOP-FREEZER REFRIGERATOR OR EQ.
2. AP-02
   GE 16 CU. FT. OVER RANGE MICROWAVE OVEN OR EQ.
3. AP-03
   SUMMIT TTM21027BRSW 36"X30"X24" RANGE OR EQ.
4. AP-04
   WHIRLPOOL UNDERCOUNTER 24"X30"X21" DISHWASHER OR EQ.
5. AP-05
   GE 0.7 CU FT CAPACITY COUNTERTOP MICROWAVE OVEN OR EQ.
6. AP-06
   SUMMIT H1630SS 5"X30"X18" RANGE HOOD OR EQ.

PLUMBING FIXTURES:

1. PF-01
   PEERLESS P110LF 8"LX7 $\frac{3}{4}$"H KITCHEN FAUCET OR EQ.
2. PF-02
   ELKAY LUSTERTONE CLASSIC STAINLESS STEEL 23 $\frac{1}{2}$"X18 $\frac{1}{2}$"X 5 $\frac{1}{2}$" SINGLE BOWL UNDERMOUNT ADA SINK OR EQ.

Client:

RANGER PROPERTIES
4790 BROADWAY
NEW YORK, NY 10034

Architect:

FOGARTY FINGER
architecture | interiors

69 Walker St, New York, NY 10013
t 212 966 7450 f 212 966 7444

Structural:

Thornton Tomasetti
51 Madison Avenue
New York, NY 10010
Tel 917.661.7800

MEP / FP:

Concessi Engineering, PC
499 7th Avenue, 11th Floor South Tower
New York, NY 10018
Tel 212.629.6810

GEOTECH:

FNA Engineering Services, PC
670 Bergen Boulevard, Floor 2
Ridgefield, NJ 07657
Tel 201.241.2444

FACADE:

Simpson Gumpertz & Heger
550 7th Avenue, 10th Floor
New York, NY 10018
Tel 212.271.7000

CODE:

Metropolis
22 Courtland Street, 10th Floor
New York, NY 10007
Tel 212.233.6344

No.	Date	Issue
02	02.06.2019	DD ESTIMATING
01	11.20.2018	SCHEMATIC DESIGN

Project:

4790 BROADWAY
NEW YORK, NY 10034

Drawing Title:

KITCHEN PLANS & ELEVATIONS

Seal & Signature:

DATE (MM-DD-YY): 02-05-2019
PROJECT No.:
DRAWING BY: ...
CHK BY: ...
DWG. No.: A-805.00
CADD FILE No.:

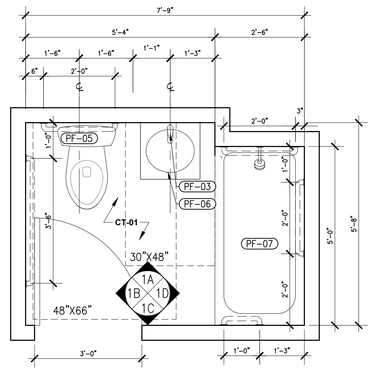

NOTE: BATHROOM AS PER BC-APPENDIX-P B-1b

BATHROOM TYPE A 1
SCALE: 1/2"=1'-0"

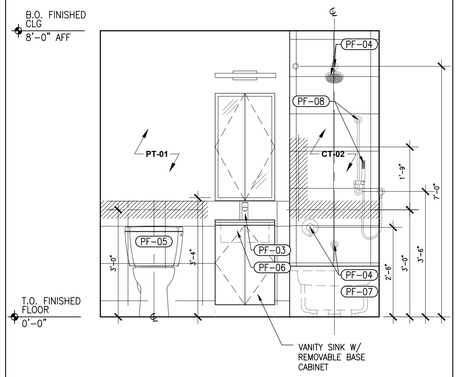

ELEVATION: TYPE A 1A
SCALE: 1/2"=1'-0"

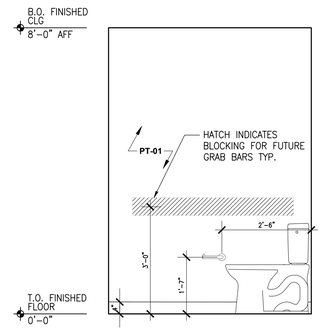

ELEVATION: TYPE A 1B
SCALE: 1/2"=1'-0"

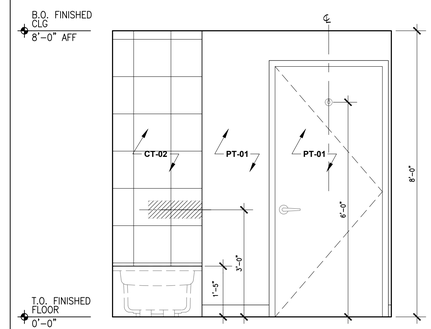

ELEVATION: TYPE A 1C
SCALE: 1/2"=1'-0"

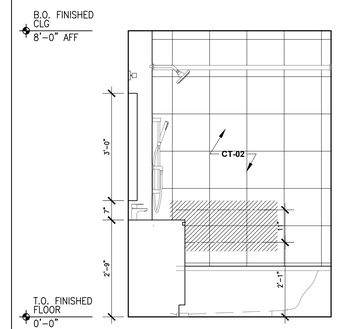

ELEVATION: TYPE A 1D
SCALE: 1/2"=1'-0"

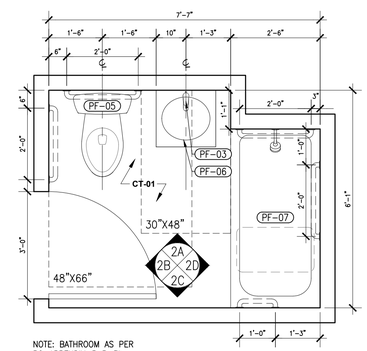

NOTE: BATHROOM AS PER BC-APPENDIX-P B-3b

BATHROOM TYPE B 2
SCALE: 1/2"=1'-0"

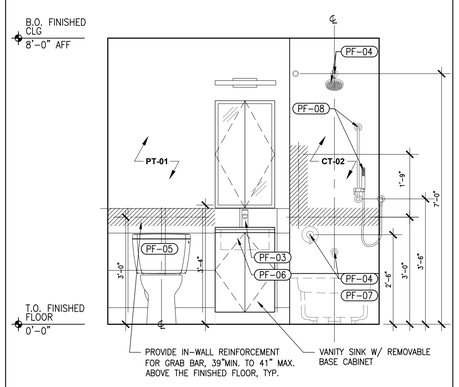

ELEVATION: TYPE B 2A
SCALE: 1/2"=1'-0"

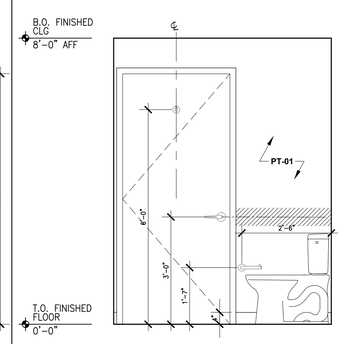

ELEVATION: TYPE B 2B
SCALE: 1/2"=1'-0"

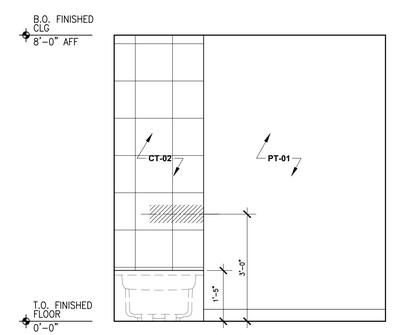

ELEVATION: TYPE B 2C
SCALE: 1/2"=1'-0"

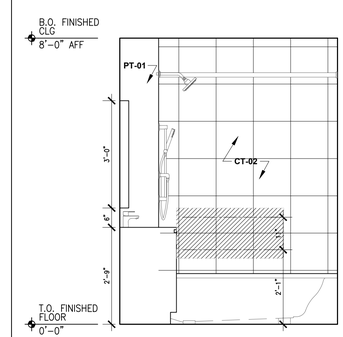

ELEVATION TYPE B 2D
SCALE: 1/2"=1'-0"

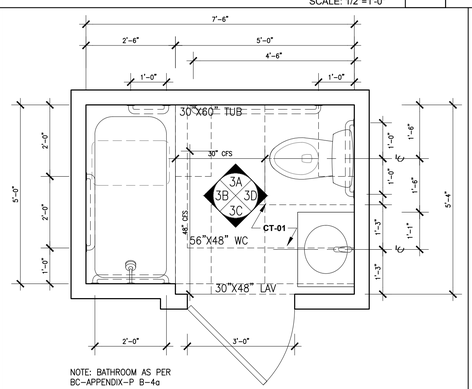

NOTE: BATHROOM AS PER BC-APPENDIX-P B-4a

BATHROOM TYPE C 3
SCALE: 1/2"=1'-0"

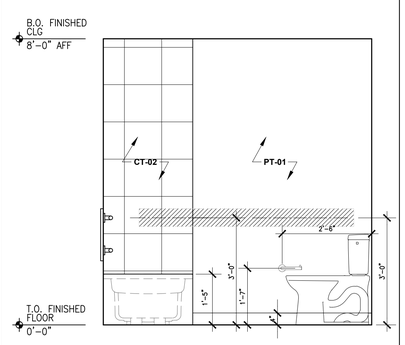

ELEVATION: TYPE C 3A
SCALE: 1/2"=1'-0"

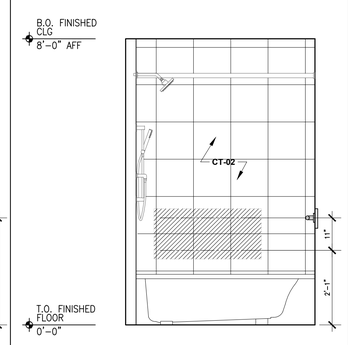

ELEVATION: TYPE C 3B
SCALE: 1/2"=1'-0"

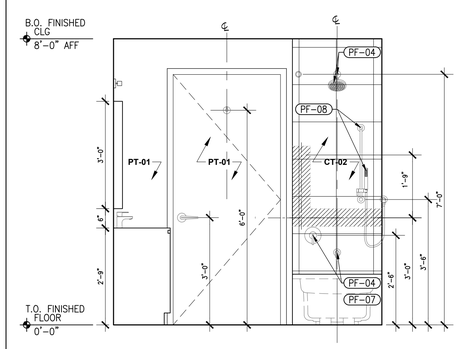

ELEVATION: TYPE C 3C
SCALE: 1/2"=1'-0"

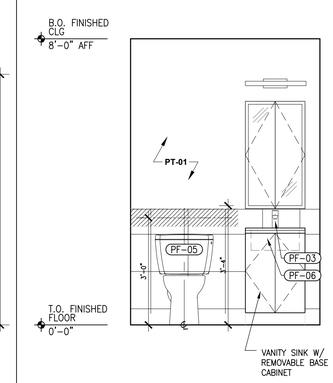

ELEVATION: TYPE C 3D
SCALE: 1/2"=1'-0"

Client:

RANGER PROPERTIES
4790 BROADWAY
NEW YORK, NY 10034

Architect:

FOGARTY FINGER
architecture | interiors

69 Walker St, New York, NY 10013
t 212 966 7450 f 212 966 7444

Structural:

Thornton Tomasetti
51 Madison Avenue
New York, NY 10010
Tel 917.661.7800

MEP / FP:

Concessi Engineering, PC
499 7th Avenue, 11th Floor South Tower
New York, NY 10018
Tel 212.629.6810

GEOTECH:

FNA Engineering Services, PC
670 Bergen Boulevard, Floor 2
Ridgefield, NJ 07657
Tel 201.241.2444

FACADE:

Simpson Gumpertz & Heger
550 7th Avenue, 10th Floor
New York, NY 10018
Tel 212.271.7000

CODE:

Metropolis
22 Courtland Street, 10th Floor
New York, NY 10007
Tel 212.233.6344

No.	Date	Issue
02	02.06.2019	DD ESTIMATING
01	11.20.2018	SCHEMATIC DESIGN

Project:

4790 BROADWAY
NEW YORK, NY 10034

Drawing Title:

BATHROOM PLANS & ELEVATIONS

Seal & Signature:

DATE (MM-DD-YY): 02-05-2019
PROJECT No.:
DRAWING BY: —
CHK BY: —
DWG. No.: A-810.00
CADD FILE No.:

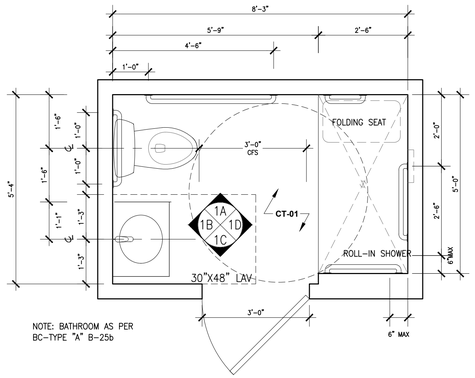

BATHROOM TYPE D1 (UFAS) | 1
SCALE: 1/2"=1'-0"

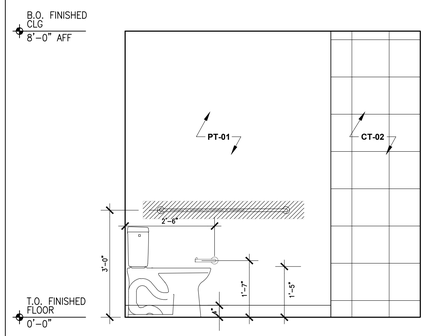

ELEVATION: TYPE D1 | 1A
SCALE: 1/2"=1'-0"

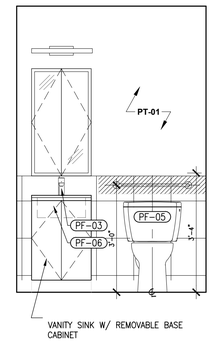

ELEVATION: TYPE D1 | 1B
SCALE: 1/2"=1'-0"

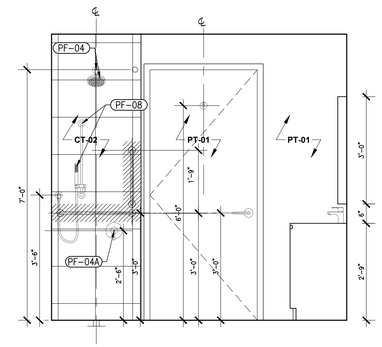

ELEVATION: TYPE D1 | 1C
SCALE: 1/2"=1'-0"

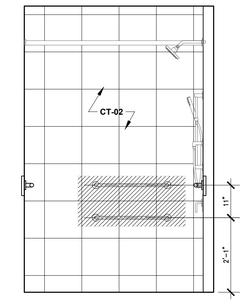

ELEVATION: TYPE D1 | 1D
SCALE: 1/2"=1'-0"

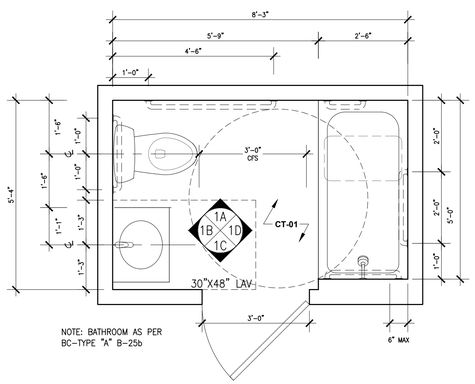

BATHROOM TYPE D | 1
SCALE: 1/2"=1'-0"

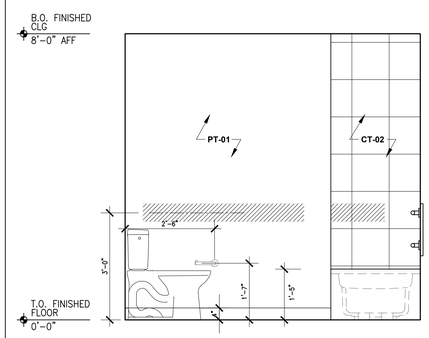

ELEVATION: TYPE D | 1A
SCALE: 1/2"=1'-0"

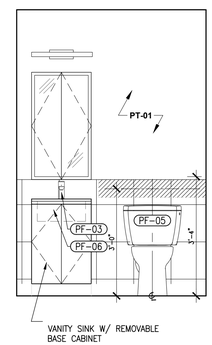

ELEVATION: TYPE D | 1B
SCALE: 1/2"=1'-0"

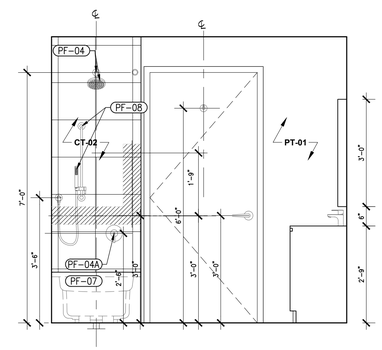

ELEVATION: TYPE D | 1C
SCALE: 1/2"=1'-0"

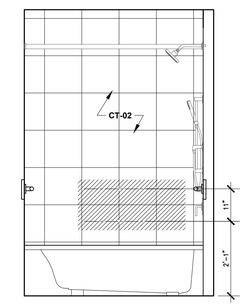

ELEVATION: TYPE D | 1D
SCALE: 1/2"=1'-0"

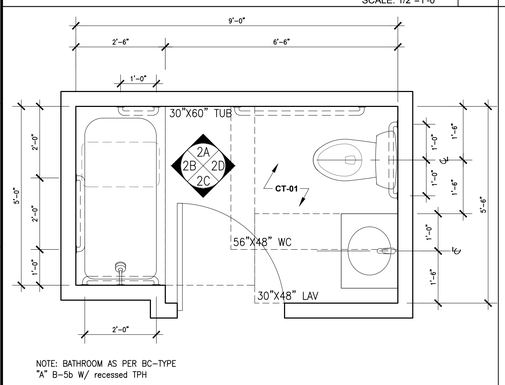

BATHROOM TYPE E | 2
SCALE: 1/2"=1'-0"

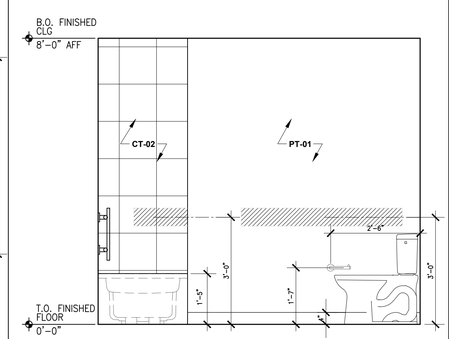

ELEVATION: TYPE E | 2A
SCALE: 1/2"=1'-0"

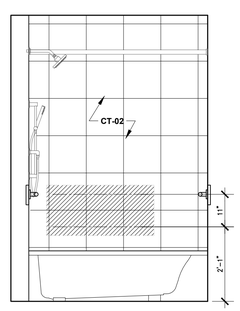

ELEVATION: TYPE 3 | 2B
SCALE: 1/2"=1'-0"

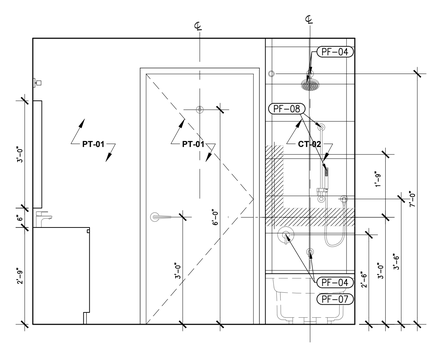

ELEVATION: TYPE E | 2C
SCALE: 1/2"=1'-0"

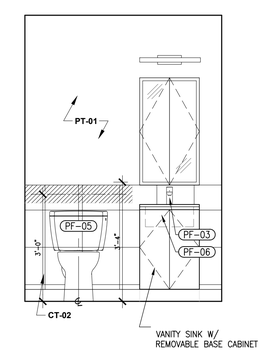

ELEVATION: TYPE E | 3D
SCALE: 1/2"=1'-0"

Client:

RANGER PROPERTIES
4790 BROADWAY
NEW YORK, NY 10034

Architect:

FOGARTY FINGER
architecture | interiors

69 Walker St, New York, NY 10013
t 212 966 7450 f 212 966 7444

Structural:

Thornton Tomasetti
51 Madison Avenue
New York, NY 10010
Tel 917.661.7800

MEP / FP:

Concessi Engineering, PC
499 7th Avenue, 11th Floor South Tower
New York, NY 10018
Tel 212.629.6810

GEOTECH:

FNA Engineering Services, PC
670 Bergen Boulevard, Floor 2
Ridgefield, NJ 07657
Tel 201.241.2444

FACADE:

Simpson Gumpertz & Heger
550 7th Avenue, 10th Floor
New York, NY 10018
Tel 212.271.7000

CODE:

Metropolis
22 Courtland Street, 10th Floor
New York, NY 10007
Tel 212.233.6344

No.	Date	Issue
02	02.06.2019	DD ESTIMATING
01	11.20.2018	SCHEMATIC DESIGN

Project:

4790 BROADWAY
NEW YORK, NY 10034

Drawing Title:

BATHROOM PLANS & ELEVATIONS

Seal & Signature:

DATE (MM-DD-YY): 02-05-2019
PROJECT No.:
DRAWING BY: --
CHK BY: --
DWG. No.: A-811.00
CADD FILE No.:

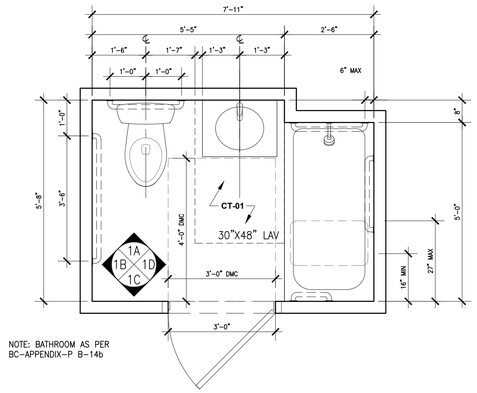

BATHROOM TYPE F 1
SCALE: 1/2"=1'-0"

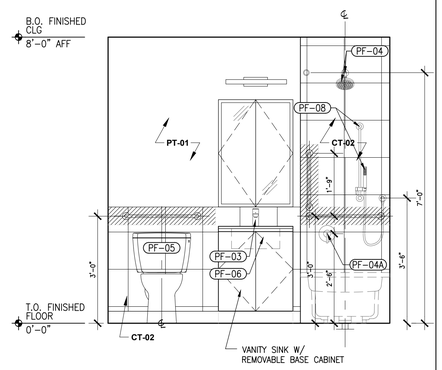

ELEVATION: TYPE F 1A
SCALE: 1/2"=1'-0"

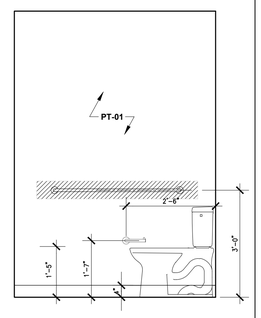

ELEVATION: TYPE F 1B
SCALE: 1/2"=1'-0"

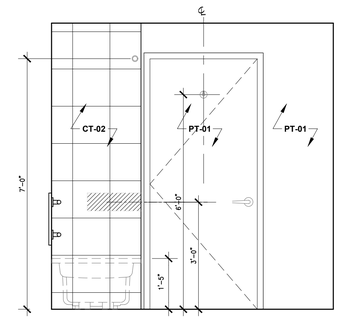

ELEVATION: TYPE F 1C
SCALE: 1/2"=1'-0"

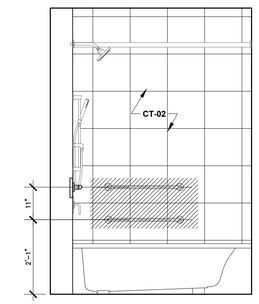

ELEVATION: TYPE F 1D
SCALE: 1/2"=1'-0"

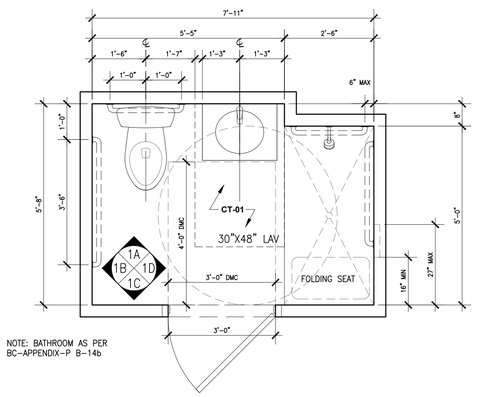

BATHROOM TYPE F1 (UFAS) 1
SCALE: 1/2"=1'-0"

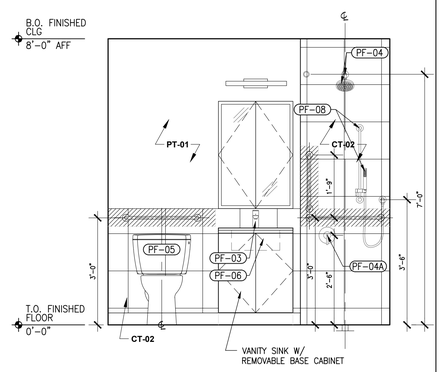

ELEVATION: TYPE F1 1A
SCALE: 1/2"=1'-0"

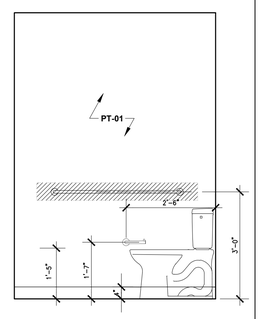

ELEVATION: TYPE F1 1B
SCALE: 1/2"=1'-0"

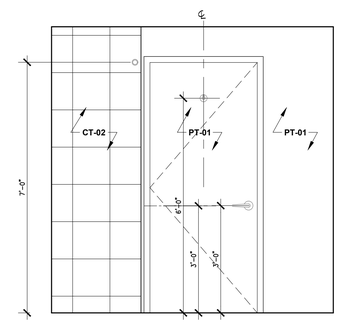

ELEVATION: TYPE F1 1C
SCALE: 1/2"=1'-0"

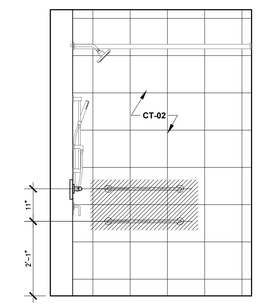

ELEVATION: TYPE F1 1D
SCALE: 1/2"=1'-0"

NOT USED

Client:

RANGER PROPERTIES
4790 BROADWAY
NEW YORK, NY 10034

Architect:

FOGARTY FINGER
architecture | interiors

69 Walker St, New York, NY 10013
t 212 966 7450 f 212 966 7444

Structural:

Thornton Tomasetti
51 Madison Avenue
New York, NY 10010
Tel 917.661.7800

MEP / FP:

Concessi Engineering, PC
499 7th Avenue, 11th Floor South Tower
New York, NY 10018
Tel 212.629.6810

GEOTECH:

FNA Engineering Services, PC
670 Bergen Boulevard, Floor 2
Ridgefield, NJ 07657
Tel 201.241.2444

FACADE:

Simpson Gumpertz & Heger
550 7th Avenue, 10th Floor
New York, NY 10018
Tel 212.271.7000

CODE:

Metropolis
22 Courtland Street, 10th Floor
New York, NY 10007
Tel 212.233.6344

No.	Date	Issue
02	02.06.2019	DD ESTIMATING
01	11.20.2018	SCHEMATIC DESIGN

Project:

4790 BROADWAY
NEW YORK, NY 10034

Drawing Title:

BATHROOM PLANS & ELEVATIONS

Seal & Signature:

DATE (MM-DD-YY): 02-05-2019
PROJECT No.:
DRAWING BY: --
CHK BY: --
DWG. No.: A-812.00
CADD FILE No.:

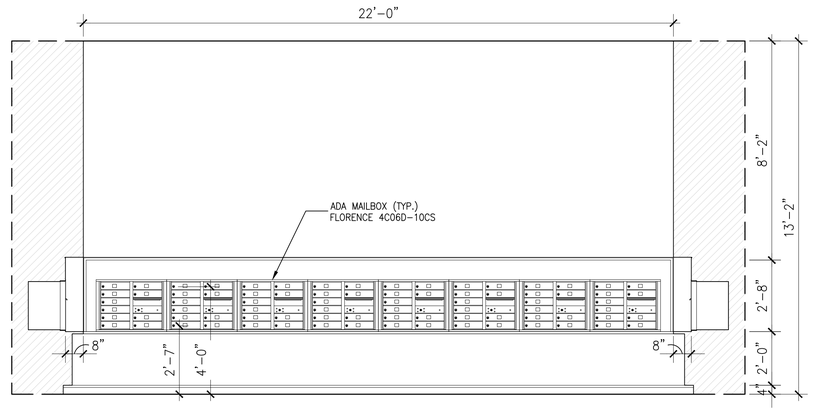

1 MAIL ROOM ELEVATION
SCALE: 1/4" = 1'-0"

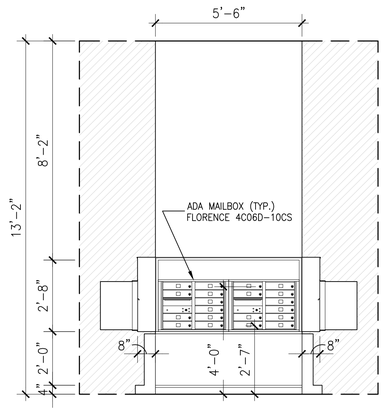

2 MAIL ROOM ELEVATION
SCALE: 1/4" = 1'-0"

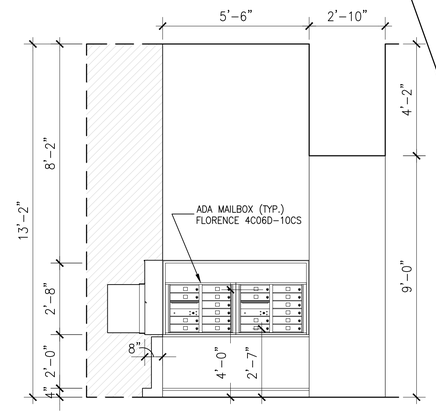

3 MAIL ROOM SECTION
SCALE: 1/4" = 1'-0"

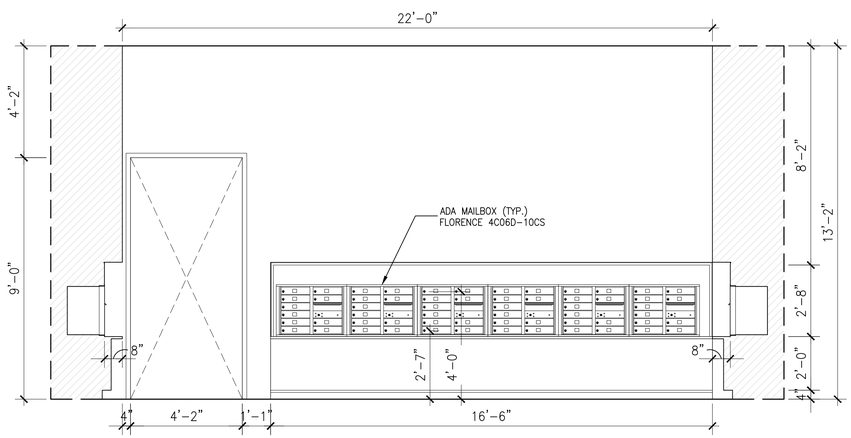

4 MAIL ROOM ELEVATION
SCALE: 1/4" = 1'-0"

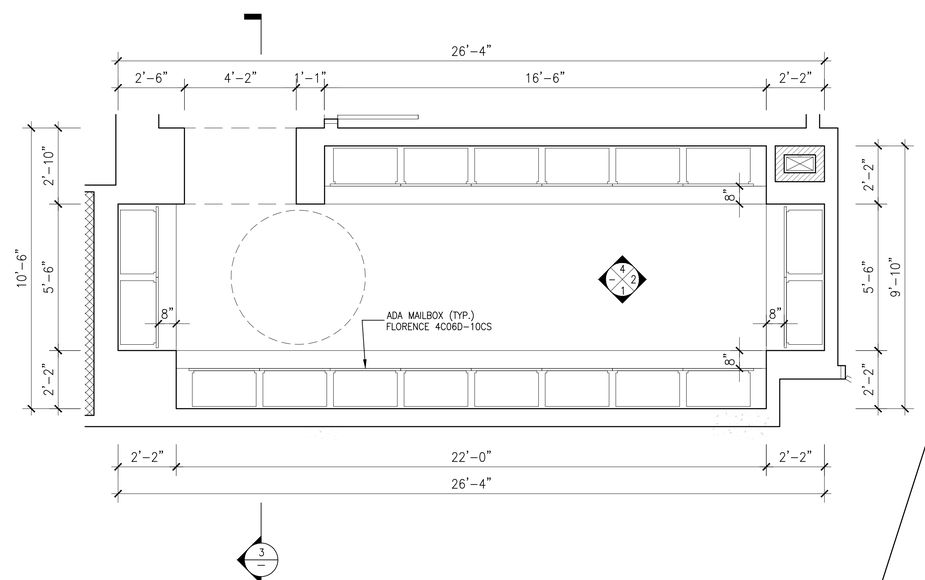

5 ENLARGED MAIL ROOM
SCALE: 1/4" = 1'-0"

Client:

RANGER PROPERTIES
4790 BROADWAY
NEW YORK, NY 10034

Architect / Engineer:

FOGARTY FINGER
architecture | interiors
69 Walker St, New York, NY 10013
t 212 966 7450 f 212 966 7444

Architect:

Andrew Berman Architect, PLLC
77 Chambers Street, 4th Floor
New York, NY 10007
Tel 212.226.5998

Structural:

Thornton Tomasetti
51 Madison Avenue
New York, NY 10010
Tel 917.661.7800
Fax 917.661.7801

MEP / FP:

Concessi Engineering, PC
499 7th Avenue, 11th Floor South Tower
New York, NY 10018
Tel 212.629.6810
Fax 212.594.4272

ELEVATOR CONSULTANT:

DTM Drafting & Consulting Services, Inc.
120 Broadway, Suite 3640
New York, NY 10271
Tel 212.595.2388

FACADE:

Simpson Gumpertz & Heger
550 Seventh Avenue, 10th Floor
New York, NY 10018
Tel 212.271.7000

No.	Date	Issue

Project:

4790 BROADWAY
NEW YORK, NY 10034

Drawing Title:

MAIL ROOM PLAN & ELEVATIONS

Seal & Signature:

DATE (MM-DD-YY): 12-18-2018
PROJECT No.:
DRAWING BY: – MB JS
CHK BY: – JS
DWG. No.: A-820.00
CADD FILE No.:

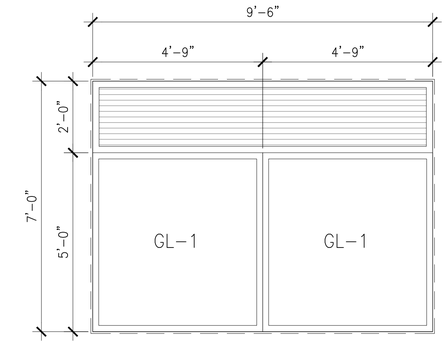

WINDOW TYPE K
SCALE: 1/2"=1'-0"

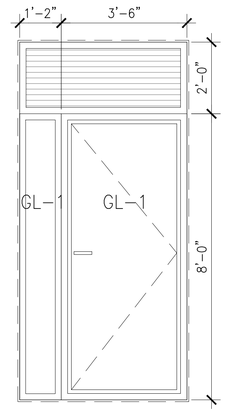

WINDOW TYPE J2
SCALE: 1/2"=1'-0"

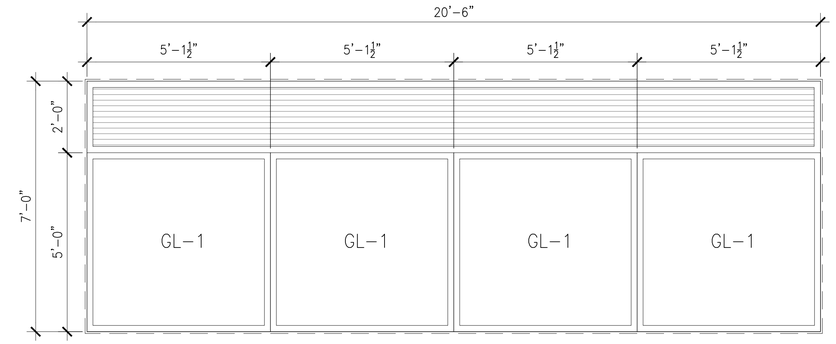

WINDOW TYPE J1
SCALE: 1/2"=1'-0"

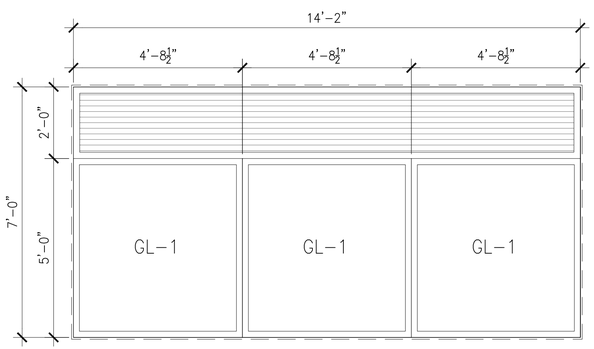

WINDOW TYPE L
SCALE: 1/2"=1'-0"

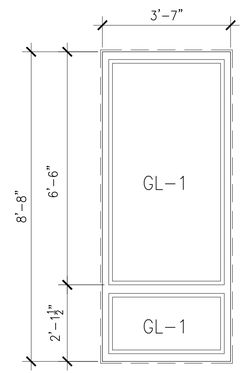

WINDOW TYPE I
SCALE: 1/2"=1'-0"

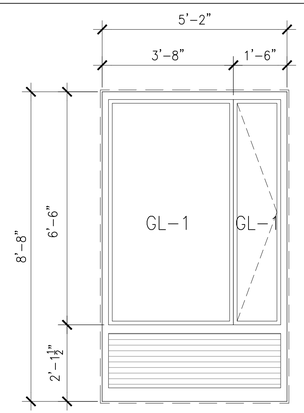

WINDOW TYPE H
SCALE: 1/2"=1'-0"

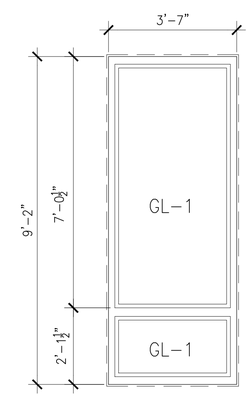

WINDOW TYPE G
SCALE: 1/2"=1'-0"

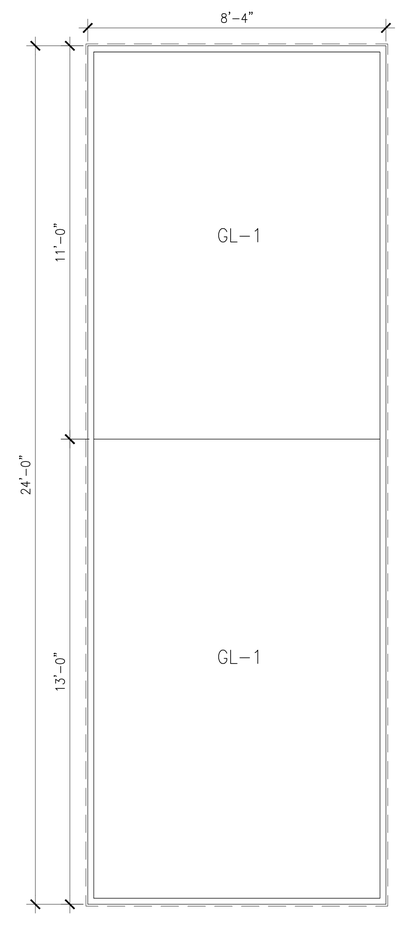

WINDOW TYPE A
SCALE: 1/2"=1'-0"

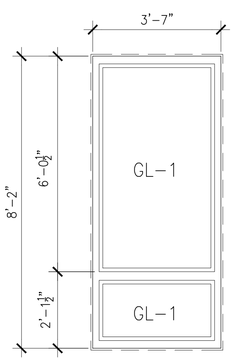

WINDOW TYPE F
SCALE: 1/2"=1'-0"

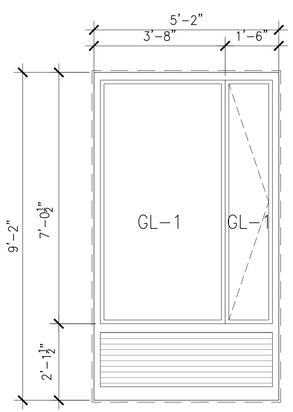

WINDOW TYPE E
SCALE: 1/2"=1'-0"

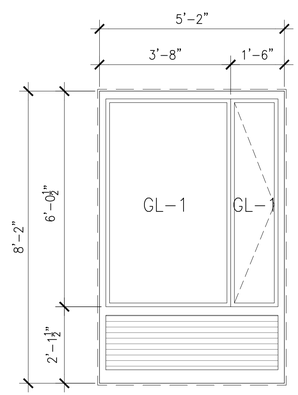

WINDOW TYPE D
SCALE: 1/2"=1'-0"

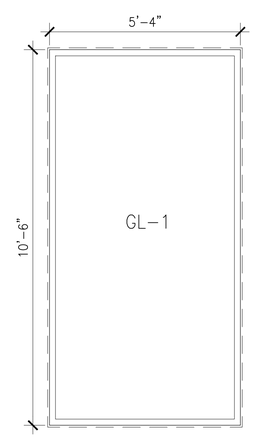

WINDOW TYPE C
SCALE: 1/2"=1'-0"

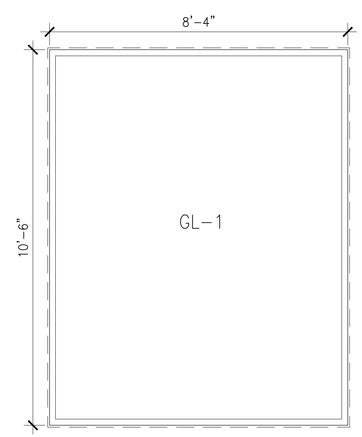

WINDOW TYPE B
SCALE: 1/2"=1'-0"

Client:

RANGER PROPERTIES
4790 BROADWAY
NEW YORK, NY 10034

Architect:

FOGARTY FINGER
architecture | interiors

69 Walker St, New York, NY 10013
t 212 966 7450 f 212 966 7444

Structural:

Thornton Tomasetti
51 Madison Avenue
New York, NY 10010
Tel 917.661.7800

MEP / FP:

Concessi Engineering, PC
499 7th Avenue, 11th Floor South Tower
New York, NY 10018
Tel 212.629.6810

GEOTECH:

FNA Engineering Services, PC
670 Bergen Boulevard, Floor 2
Ridgefield, NJ 07657
Tel 201.241.2444

FACADE:

Simpson Gumpertz & Heger
550 7th Avenue, 10th Floor
New York, NY 10018
Tel 212.271.7000

CODE:

Metropolis
22 Courtland Street, 10th Floor
New York, NY 10007
Tel 212.233.6344

No.	Date	Issue
02	02.06.2019	DD ESTIMATING
01	11.20.2018	SCHEMATIC DESIGN

Project:

4790 BROADWAY
NEW YORK, NY 10034

Drawing Title:

WINDOW TYPES

Seal & Signature:

DATE (MM-DD-YY): 02-05-2019
PROJECT No.:
DRAWING BY: –
CHK BY: –
DWG. No.: A-900.00
CADD FILE No.:

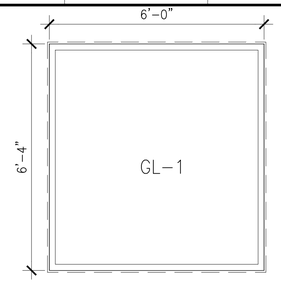

WINDOW TYPE N
SCALE: 1/2"=1'-0"

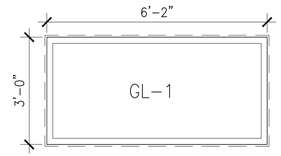

WINDOW TYPE M
SCALE: 1/2"=1'-0"

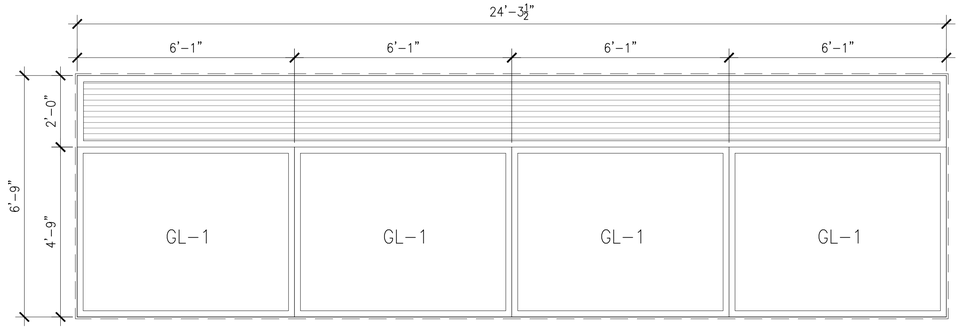

WINDOW TYPE R
SCALE: 1/2"=1'-0"

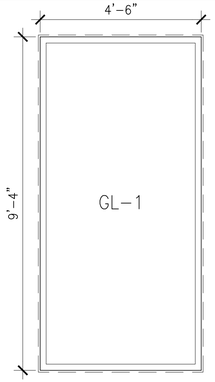

WINDOW TYPE W
SCALE: 1/2"=1'-0"

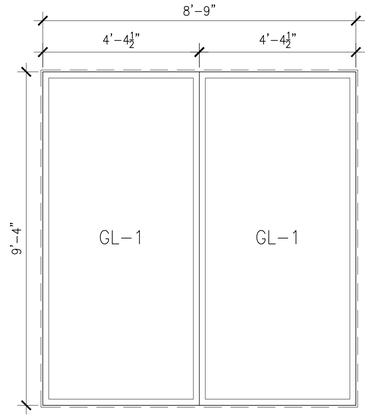

WINDOW TYPE V
SCALE: 1/2"=1'-0"

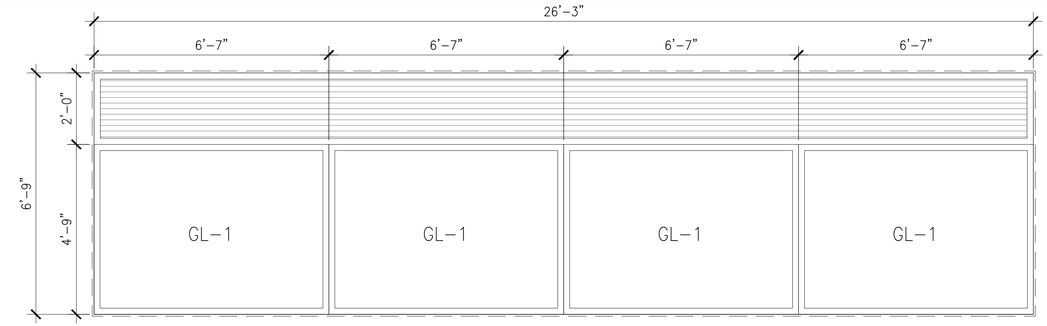

WINDOW TYPE S
SCALE: 1/2"=1'-0"

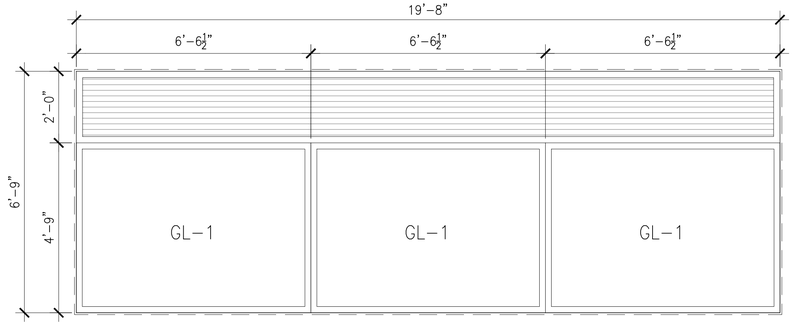

WINDOW TYPE T
SCALE: 1/2"=1'-0"

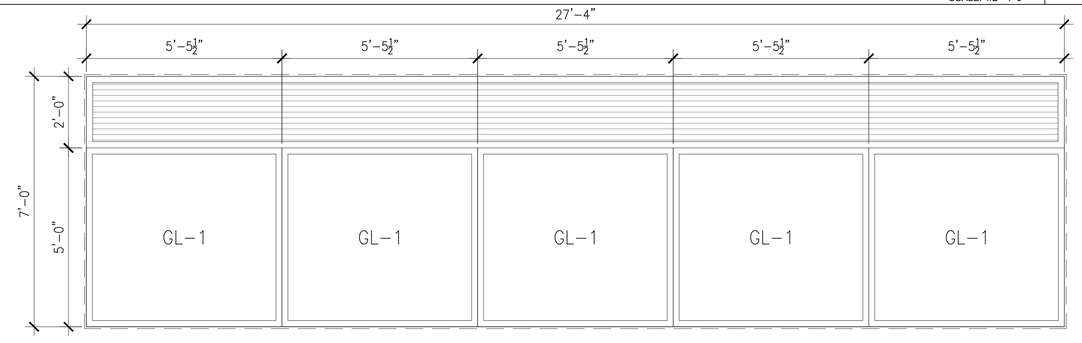

WINDOW TYPE P
SCALE: 1/2"=1'-0"

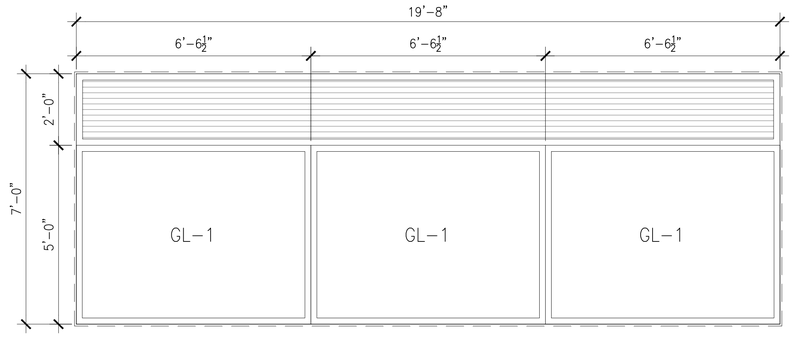

WINDOW TYPE Q
SCALE: 1/2"=1'-0"

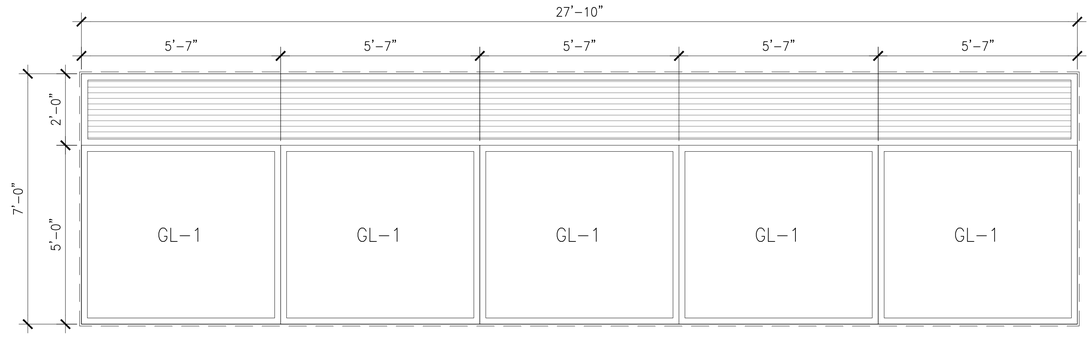

WINDOW TYPE O
SCALE: 1/2"=1'-0"

Client:

RANGER PROPERTIES
4790 BROADWAY
NEW YORK, NY 10034

Architect:

FOGARTY FINGER
architecture | interiors

69 Walker St, New York, NY 10013
t 212 966 7450 f 212 966 7444

Structural:

Thornton Tomasetti
51 Madison Avenue
New York, NY 10010
Tel 917.661.7800

MEP / FP:

Concessi Engineering, PC
499 7th Avenue, 11th Floor South Tower
New York, NY 10018
Tel 212.629.6810

GEOTECH:

FNA Engineering Services, PC
670 Bergen Boulevard, Floor 2
Ridgefield, NJ 07657
Tel 201.241.2444

FACADE:

Simpson Gumpertz & Heger
550 7th Avenue, 10th Floor
New York, NY 10018
Tel 212.271.7000

CODE:

Metropolis
22 Courtland Street, 10th Floor
New York, NY 10007
Tel 212.233.6344

No.	Date	Issue
02	02.06.2019	DD ESTIMATING
01	11.20.2018	SCHEMATIC DESIGN

Project:

4790 BROADWAY
NEW YORK, NY 10034

Drawing Title:

WINDOW TYPES

Seal & Signature:

DATE (MM-DD-YY): 02-05-2019
PROJECT No.:
DRAWING BY: –
CHK BY: –
DWG. No.: A-901.00
CADD FILE No.:

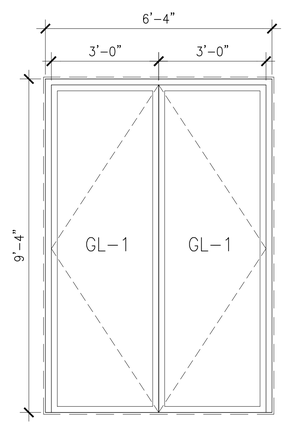

WINDOW TYPE X
SCALE: 1/2"=1'-0"

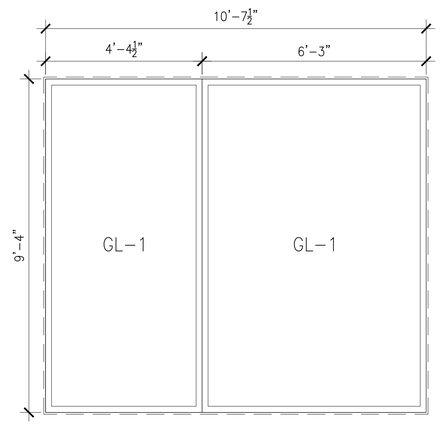

WINDOW TYPE U
SCALE: 1/2"=1'-0"

Client:

RANGER PROPERTIES
4790 BROADWAY
NEW YORK, NY 10034

Architect:

FOGARTY FINGER
architecture | interiors

69 Walker St, New York, NY 10013
t 212 966 7450 f 212 966 7444

Structural:

Thornton Tomasetti
51 Madison Avenue
New York, NY 10010
Tel 917.661.7800

MEP / FP:

Concessi Engineering, PC
499 7th Avenue, 11th Floor South Tower
New York, NY 10018
Tel 212.629.6810

GEOTECH:

FNA Engineering Services, PC
670 Bergen Boulevard, Floor 2
Ridgefield, NJ 07657
Tel 201.241.2444

FACADE:

Simpson Gumpertz & Heger
550 7th Avenue, 10th Floor
New York, NY 10018
Tel 212.271.7000

CODE:

Metropolis
22 Courtland Street, 10th Floor
New York, NY 10007
Tel 212.233.6344

No.	Date	Issue
02	02.06.2019	DD ESTIMATING
01	11.20.2018	SCHEMATIC DESIGN

Project:

4790 BROADWAY
NEW YORK, NY 10034

Drawing Title:

WINDOW TYPES

Seal & Signature:

DATE (MM-DD-YY): 02-05-2019
PROJECT No.:
DRAWING BY: –
CHK BY: –
DWG. No.:
A-902.00
CADD FILE No.:

LIGHTING SCHEDULE								
CUT SHEET	QTY	TYPE	MANUFACTURER	MODEL NUMBER	DESCRIPTION	LAMPING	WATTAGE	VOLTS
https://bruckllighting.com/download/b/QB%20Sconce/Spec%20Sheets/QB%20Sconce%20Spec%20Sheet.pdf		C1	BRUCK BY LEDRA BRANDS INC.	QB SCONCE	RESIDENTIAL CORRIDOR LIGHTING	103 LED	8.8W	
https://hubbellcdn.com/specsheet/PROG_P5774-3030K_spec.pdf		C2	PROGRESS LIGHTING.	P5774-30/30k	RESIDENTIAL LOBBY & MAIL/PACKAGING ROOM	LED	17W	120V
https://hubbellcdn.com/specsheet/PROG_P5774-3030K_spec.pdf		C3	EATON	4SLSP4040DD	LIBRARY	LED		120V
https://www.natltg.com/content/downloads/pdfs/AFFINE24-LED.pdf		C4	NATIONAL LIGHTING	AFFINE-24-D/ID-232-TB-LPA-T-120	UPK	FLUORESCENT	64W	
		F10	LIGHTOLIER	KW-4-A-2-32-120-IH	OPEN/UTILITY SPACES	FLUORESCENT	64W	
https://www.sonnemanawayoflight.com/Specs/2431.01-FT		U2	SONNEMAN	2431 TUBO SLIM 24"	BATHROOM VANITY	LED	16W	

LIGHTING SCHEDULE 1

Client:

RANGER PROPERTIES
4790 BROADWAY
NEW YORK, NY 10034

Architect:

FOGARTY FINGER
architecture | interiors
69 Walker St, New York, NY 10013
t 212 966 7450 f 212 966 7444

Structural:

Thornton Tomasetti
51 Madison Avenue
New York, NY 10010
Tel 917.661.7800

MEP / FP:

Concessi Engineering, PC
499 7th Avenue, 11th Floor South Tower
New York, NY 10018
Tel 212.629.6810

GEOTECH:

FNA Engineering Services, PC
670 Bergen Boulevard, Floor 2
Ridgefield, NJ 07657
Tel 201.241.2444

FACADE:

Simpson Gumpertz & Heger
550 7th Avenue, 10th Floor
New York, NY 10018
Tel 212.271.7000

CODE:

Metropolis
22 Courtland Street, 10th Floor
New York, NY 10007
Tel 212.233.6344

No.	Date	Issue
02	02.06.2019	DD ESTIMATING
01	11.20.2018	SCHEMATIC DESIGN

Project:

4790 BROADWAY
NEW YORK, NY 10034

Drawing Title:

LIGHTING SCHEDULE

Seal & Signature:

DATE (MM-DD-YY): 02-05-2019
PROJECT No.:
DRAWING BY: –
CHK BY: –
DWG. No.: A-903.00
CADD FILE No.:

	DOOR TAG	ROOM	OPENING WIDTH	OPENING HEIGHT	FRAME JAMB	FRAME HEAD	FRAME TYPE	FRAME MATERIAL	DOOR TYPE	DOOR MATERIAL	DOOR THK.	SILL TYPE	UL RATING LABEL	HRDWARE SET	SCOPE	REMARKS
CELLAR FLOOR	000	BIKE ROOM	3'-0"	7'-0"	J2	H2	A	HM	A	HM	1 3/4"		90 MIN			
	001	TELECOM	3'-0"	7'-0"	J2	H2	A	HM	A	HM	1 3/4"		90 MIN			
	002	STAIR B	3'-0"	7'-0"	J2	H2	J	HM	J	HM	1 3/4"		90 MIN			
	003	STORAGE	3'-0"	7'-0"	J2	H2	A	HM	A	HM	1 3/4"		90 MIN			
	004	ELEC. ROOM	3'-0"	7'-0"	J4	H4	A	HM	A	HM	1 3/4"		90 MIN			
	005	REFUSE ROOM	5'-0"	7'-0"	J7	H7	L	HM	L	HM	1 3/4"		90 MIN			
	006	CORRIDOR	3'-0"	7'-0"	J7	H7	A	HM	A	HM	1 3/4"		90 MIN			
	007	GAS ROOM	3'-0"	7'-0"	J7	H7	A	HM	A	HM	1 3/4"		90 MIN			
	008	WATER ROOM	3'-0"	7'-0"	J7	H7	A	HM	A	HM	1 3/4"		90 MIN			
	009	FIRE P. RM	3'-0"	7'-0"	J7	H7	A	HM	A	HM	1 3/4"		90 MIN			
	010	ATS	6'-0"	7'-0"	J7	H7	B	HM	B	HM	1 3/4"		90 MIN			
	011	AHU	3'-0"	7'-0"	J7	H7	A	HM	A	HM	1 3/4"		90 MIN			
	012	ELEC. ROOM	6'-0"	7'-0"	J7	H7	B	HM	B	HM	1 3/4"		90 MIN			
	013	ELEC. ROOM	3'-0"	7'-0"	J7	H7	A	HM	A	HM	1 3/4"		90 MIN			
	014	STAIR F	3'-0"	7'-0"	J7	H7	J	HM	J	HM	1 3/4"		90 MIN			
	015	STAIR B	3'-0"	7'-0"	J2	H2	J	HM	J	HM	1 3/4"		90 MIN			
	016	STEM	6'-0"	7'-0"	J2	H2	B	HM	B	HM	1 3/4"		90 MIN			
	017	STORAGE	3'-0"	7'-0"	J1	H1	A	HM	A	HM	1 3/4"		-			
	018	OFFICE	3'-0"	7'-6"	J1	H1	A	HM	A	HM	1 3/4"		-			
	019	STAIR D	3'-0"	7'-6"	J2	H2	J	HM	J	HM	1 3/4"		90 MIN			
	020	MECH	3'-0"	7'-6"	J2	H2	A	HM	A	HM	1 3/4"		90 MIN			
	021	STAIR D	3'-0"	7'-6"	J2	H2	J	HM	J	HM	1 3/4"		-			
	022	JANITOR CLOSET	3'-0"	7'-6"	J2	H2	A	HM	A	HM	1 3/4"		90 MIN			
	023	CLASSROOM	3'-0"	7'-6"	J2	H2	A	HM	A	HM	1 3/4"		90 MIN			
	024	STORAGE	3'-0"	7'-6"	J1	H1	A	HM	A	HM	1 3/4"		-			
	025	KITCHEN	3'-0"	7'-6"	J2	H2	A	HM	A	HM	1 3/4"		90 MIN			
	026	STORAGE	3'-0"	7'-6"	J2	H2	A	HM	A	HM	1 3/4"		90 MIN			
	027	MULTI PURPOSE ROOM	3'-0"	7'-6"	J2	H2	A	HM	A	HM	1 3/4"		90 MIN			
	028	STORAGE	3'-0"	7'-6"	J1	H1	A	HM	A	HM	1 3/4"		-			
	029	MULTI PURPOSE ROOM	6'-0"	7'-6"	J2	H2	B	HM	B	HM	1 3/4"		90 MIN			
	030	OFFICE	3'-0"	7'-6"	J2	H2	A	HM	A	HM	1 3/4"		90 MIN			
	031	OFFICE	3'-0"	7'-6"	J2	H2	A	HM	A	HM	1 3/4"		90 MIN			
	032	STORAGE	3'-0"	7'-6"	J2	H2	A	HM	A	HM	1 3/4"		90 MIN			
	033	STORAGE	3'-0"	7'-6"	J2	H2	A	HM	A	HM	1 3/4"		90 MIN			
	034	STAIR C	5'-0"	7'-6"	J2	H2	L	HM	L	HM	1 3/4"		90 MIN			
	035	ELEVATOR ROOM	3'-0"	7'-6"			A	HM	A	HM	1 3/4"		-			
	036	WC	3'-0"	7'-6"	J1	H1	A	HM	A	HM	1 3/4"		-			WITH OCCUPANCY INDICATOR, 1" UNDERCUT
	037	WC	3'-0"	7'-6"	J1	H1	A	HM	A	HM	1 3/4"		-			WITH OCCUPANCY INDICATOR, 1" UNDERCUT
	038	WC	3'-0"	7'-6"	J1	H1	A	HM	A	HM	1 3/4"		-			WITH OCCUPANCY INDICATOR, 1" UNDERCUT
	039	WC	3'-0"	7'-6"	J1	H1	A	HM	A	HM	1 3/4"		-			WITH OCCUPANCY INDICATOR, 1" UNDERCUT
	040	WC	3'-0"	7'-6"	J1	H1	A	HM	A	HM	1 3/4"		-			WITH OCCUPANCY INDICATOR, 1" UNDERCUT
	041	WC	3'-0"	7'-6"	J1	H1	A	HM	A	HM	1 3/4"		-			WITH OCCUPANCY INDICATOR, 1" UNDERCUT
	042	WC	3'-0"	7'-6"	J1	H1	A	HM	A	HM	1 3/4"		-			670 OCCUPANCY INDICATOR, 1" UNDERCUT
	043	WC	3'-0"	7'-6"	J2	H2	A	HM	A	HM	1 3/4"		-			WITH OCCUPANCY INDICATOR, 1" UNDERCUT
	044	ELEVATOR	3'-6"	8'-0"							1 3/4"		90 MIN			PER ELEVATOR MANUFACTURER
	045	CORRIDOR	3'-0"	7'-6"	J2	H2	A	HM	A	HM	1 3/4"		90 MIN			
GROUND FLOOR	100	UPK LOBBY	-	-	-	-	-	-	-	-	-	-	-	-	-	PER EXTERIOR WALL SECTIONS
	101	UPK LOBBY	-	-	-	-	-	-	-	-	-	-	-	-	-	PER EXTERIOR WALL SECTIONS
	102	ACTS LOBBY	-	-	-	-	-	-	-	-	-	-	-	-	-	PER EXTERIOR WALL SECTIONS
	103	ACTS LOBBY	-	-	-	-	-	-	-	-	-	-	-	-	-	PER EXTERIOR WALL SECTIONS
	104	RESIDENTIAL LOBBY	-	-	-	-	-	-	-	-	-	-	-	-	-	PER EXTERIOR WALL SECTIONS
	105	RESIDENTIAL LOBBY	-	-	-	-	-	-	-	-	-	-	-	-	-	PER EXTERIOR WALL SECTIONS
	106	EGRESS CORRIDOR	-	-	-	-	-	-	-	-	-	-	-	-	-	PER EXTERIOR WALL SECTIONS
	107	LIBRARY LOBBY	-	-	-	-	-	-	-	-	-	-	-	-	-	PER EXTERIOR WALL SECTIONS
	108	LIBRARY LOBBY	-	-	-	-	-	-	-	-	-	-	-	-	-	PER EXTERIOR WALL SECTIONS
	109	EGRESS CORRIDOR	-	-	-	-	-	-	-	-	-	-	-	-	-	PER EXTERIOR WALL SECTIONS
	110	STAIR F	3'-0"	7'-6"	J6	H6	J	HM	J	HM	1 3/4"		90 MIN			
	111	STAIR F	3'-0"	7'-6"	J6	H6	J	HM	J	HM	1 3/4"		90 MIN			
	112	CORRIDOR	6'-0"	7'-6"	J1	H1	B	HM	B	HM	1 3/4"		-			
	113	EGRESS CORRIDOR	-	-	-	-	-	-	-	-	-	-	-	-	-	PER EXTERIOR WALL SECTIONS
	114	EGRESS CORRIDOR	-	-	-	-	-	-	-	-	-	-	-	-	-	PER EXTERIOR WALL SECTIONS
	115	CORRIDOR	3'-0"	7'-6"	J2	H2	A	HM	A	HM	1 3/4"		90 MIN			
	116	STAIR D	3'-0"	7'-6"	J2	H2	J	HM	J	HM	1 3/4"		90 MIN			
	117	ELEVATOR	3'-6"	8'-0"							1 3/4"		90 MIN			PER ELEVATOR MANUFACTURER
	118	UPK ELEVATOR LOBBY	4'-0"	8'-0"	J1	H1	J	HM	J	HM	1 3/4"		-			HOLD OPEN DOOR
	119	ACTS ELEVATOR LOBBY	4'-0"	8'-0"	J1	H1	J	HM	J	HM	1 3/4"		-			HOLD OPEN DOOR
	120	UPK LOBBY	4'-0"	8'-0"	J1	H1	J	HM	J	HM	1 3/4"		-			HOLD OPEN DOOR
	121	ACTS LOBBY	4'-0"	8'-0"	J1	H1	J	HM	J	HM	1 3/4"		-			HOLD OPEN DOOR
	122	ELEVATOR	3'-6"	8'-0"							1 3/4"		90 MIN			PER ELEVATOR MANUFACTURER
	123	STAIR A	3'-0"	8'-0"	J2	H2	J	HM	J	HM	1 3/4"		90 MIN			
	124	STAIR B	3'-0"	8'-0"	J2	H2	J	HM	J	HM	1 3/4"		90 MIN			
	125	STAIR B	3'-0"	8'-0"	J1	H1	J	HM	J	HM	1 3/4"		-			
	126	STAIR A	3'-0"	8'-0"	J2	H2	J	HM	J	HM	1 3/4"		90 MIN			
	127	PACKAGE ROOM	3'-0"	8'-0"	J1	H1	A	HM	A	HM	1 3/4"		-			ELECTRIC STRIKE
	128	MECHANICAL	3'-0"	8'-0"	J2	H2	B	HM	B	HM	1 3/4"		90 MIN			
RESIDENTIAL	R-01	APT ENTRY	3'-0"	7'-0"	J2	H2	A	SOLID CORE PTD. WD.	A	SOLID CORE PTD. WD.	1 3/4"	S7	90 MIN	-		
	R-02	BATHROOM	3'-0"	6'-8"	J1	H1	A	SOLID CORE PTD. WD.	A	SOLID CORE PTD. WD.	1 3/4"	S5	-	-		
	R-03	BEDROOM	3'-0"	6'-8"	J1	H1	A	SOLID CORE PTD. WD.	A	SOLID CORE PTD. WD.	1 3/4"	S6	-	-		
	R-04	CLOSET	3'-0"	6'-8"	J1	H1	B	SOLID CORE PTD. WD.	B	SOLID CORE PTD. WD.	1 3/4"	S5	-	-		
	R-05	CLOSET	2'-0"	6'-8"	J1	H1	A	SOLID CORE PTD. WD.	A	SOLID CORE PTD. WD.	1 3/4"	S5	-	-		
	R-06	CLOSET	3'-0"	6'-8"	J1	H1	A	SOLID CORE PTD. WD.	A	SOLID CORE PTD. WD.	1 3/4"	S5	-	-		
	R-07	CLOSET	4'-0"	6'-8"	J1	H1	B	SOLID CORE PTD. WD.	B	SOLID CORE PTD. WD.	1 3/4"	S5	-	-		
RES CORE	C-01	STAIR	3'-0"	7'-6"	J5	H5	J	HM	J	HM	1 3/4"	S8	-	-		
	C-02	REFUSE RM	3'-0"	7'-6"	J2	H2	A	HM	A	HM	1 3/4"	S8				
	C-03	ELECTRICAL CL	3'-0"	7'-6"	J2	H2	B	HM	B	HM	1 3/4"	S8				
	C-04	JANITOR CLOSET	3'-0"	7'-6"	J2	H2	B	HM	B	HM	1 3/4"	S8				
	C-05	ELEVATOR	3'-6"	7'-4"							1 3/4"		90 MIN			PER ELEVATOR MANUFACTURER
UPK (SECOND FLOOR)	200	CLASSROOM A	3'-0"	7'-6"	J2	H2	M	HM	M	HM			90 MIN			
	200A	PK TOILET	3'-0"	7'-6"	J1	H1	A	HM	A	HM	1 3/4"					
	201	STAIR A	3'-0"	7'-6"	J1	H1	J	HM	J	HM	1 3/4"					
	202	STAIR B	3'-0"	7'-6"	J2	H2	J	HM	J	HM	1 3/4"		90 MIN			
	203	STAIR B	3'-0"	7'-6"	J2	H2	J	HM	J	HM	1 3/4"		90 MIN			
	204	TELECOM	3'-0"	7'-6"	J2	H2	A	HM	A	HM	1 3/4"		90 MIN			
	205	WC	3'-0"	7'-6"	J2	H2	A	HM	A	HM	1 3/4"		90 MIN			WITH OCCUPANCY INDICATOR, 1" UNDERCUT
	206	MECH	3'-0"	7'-6"	J2	H2	A	HM	A	HM	1 3/4"		90 MIN			
	207	CORRIDOR	3'-0"	7'-6"	J2	H2	A	HM	A	HM	1 3/4"		90 MIN			
	208	UPK MECH	3'-0"	7'-6"	J2	H2	A	HM	A	HM	1 3/4"		90 MIN			
	209	CUSTODIAN CL	3'-0"	7'-6"	J1	H1	A	HM	A	HM	1 3/4"					
	210	CLASSROOM C	3'-0"	7'-6"	J2	H2	M	HM	M	HM	1 3/4"		90 MIN			
	210A	PK TOILET	3'-0"	7'-6"	J1	H1	A	HM	A	HM	1 3/4"					
	211	OUTDOOR PLAY AREA									1 3/4"					
	212	CLASSROOM B	3'-0"	7'-6"	J2	H2	M	HM	M	HM	1 3/4"		90 MIN			
	212A	PK TOILET	3'-0"	7'-6"	J1	H1	A	HM	A	HM	1 3/4"					
	213	NURSE	3'-0"	7'-6"	J2	H2	A	HM	A	HM	1 3/4"		90 MIN			
	214	PARENTS RM	3'-0"	7'-6"	J2	H2	J	HM	J	HM	1 3/4"		90 MIN			
	215	ELEVATOR	3'-6"	7'-6"							1 3/4"		90 MIN			PER ELEVATOR MANUFACTURER
	216	STAIR E	3'-0"	7'-6"	J2	H2	J	HM	J	HM	1 3/4"		90 MIN			
	217	STAFF RM	3'-0"	7'-6"	J2	H2	A	HM	A	HM	1 3/4"		90 MIN			
	218	WAITING RM	3'-0"	7'-6"	J2	H2	J	HM	J	HM	1 3/4"		90 MIN			
	218A	OFFICE	3'-0"	7'-6"	J1	H1	A	HM	A	HM	1 3/4"					
	219	WARMING PANTRY	3'-0"	7'-6"	J2	H2	A	HM	A	HM	1 3/4"		90 MIN			
	219A	FOOD STORAGE	3'-0"	7'-6"	J1	H1	A	HM	A	HM	1 3/4"					
	220	LIBRARY STAIR	3'-0"	7'-6"	J2	H2	J	HM	J	HM	1 3/4"		90 MIN			
ROOF																

Client:

RANGER PROPERTIES
4790 BROADWAY
NEW YORK, NY 10034

Architect:

FOGARTY FINGER
architecture | interiors

69 Walker St, New York, NY 10013
t 212 966 7450 f 212 966 7444

Structural:

Thornton Tomasetti
51 Madison Avenue
New York, NY 10010
Tel 917.661.7800

MEP / FP:

Concessi Engineering, PC
499 7th Avenue, 11th Floor South Tower
New York, NY 10018
Tel 212.629.6810

GEOTECH:

FNA Engineering Services, PC
670 Bergen Boulevard, Floor 2
Ridgefield, NJ 07657
Tel 201.241.2444

FACADE:

Simpson Gumpertz & Heger
550 7th Avenue, 10th Floor
New York, NY 10018
Tel 212.271.7000

CODE:

Metropolis
22 Courtland Street, 10th Floor
New York, NY 10007
Tel 212.233.6344

No.	Date	Issue
02	02.06.2019	DD ESTIMATING
01	11.20.2018	SCHEMATIC DESIGN

Project:

4790 BROADWAY
NEW YORK, NY 10034

Drawing Title:

DOOR SCHEDULE

Seal & Signature:

DATE (MM-DD-YY): 02-05-2019
PROJECT No.:
DRAWING BY: --
CHK BY: --
DWG. No.:
A-904.00
CADD FILE No.:

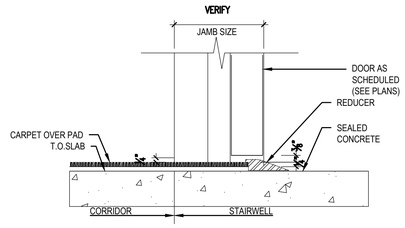

S8 SILL DETAIL: CARPET / CONCRETE
SCALE: 3"=1'-0"

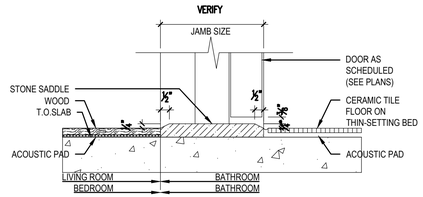

S6 SILL DETAIL: WOOD / TILE
SCALE: 3"=1'-0"

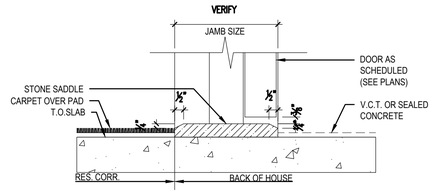

S4 SILL DETAIL: CARPET / VCT OR SEALED CONCRETE
SCALE: 3"=1'-0"

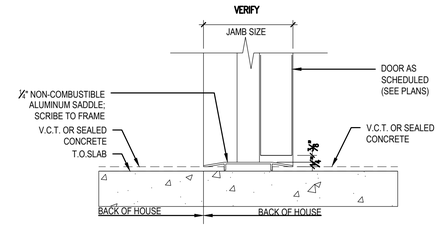

S2 SILL DETAIL: VCT OR SEALED CONCRETE / VCT OR SEALED CONCRETE
SCALE: 3"=1'-0"

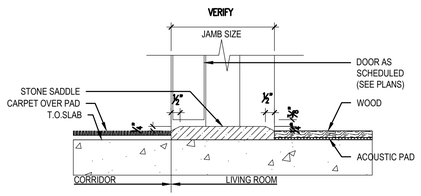

S7 SILL DETAIL: CARPET / WOOD
SCALE: 3"=1'-0"

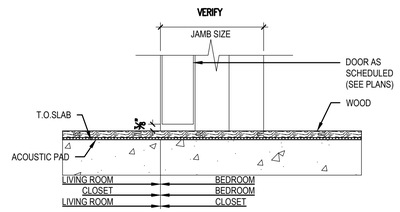

S5 SILL DETAIL: WOOD / WOOD
SCALE: 3"=1'-0"

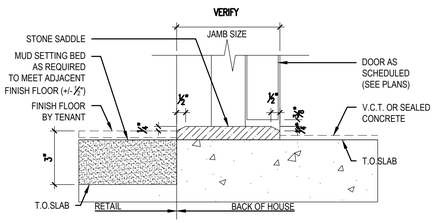

S3 SILL DETAIL: MUD SET F.F. BY TENANT / SEALED CONCRETE
SCALE: 3"=1'-0"

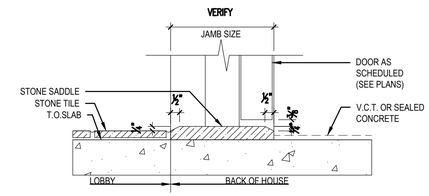

S1 SILL DETAIL: STONE TILE / VCT OR SEALED CONCRETE
SCALE: 3"=1'-0"

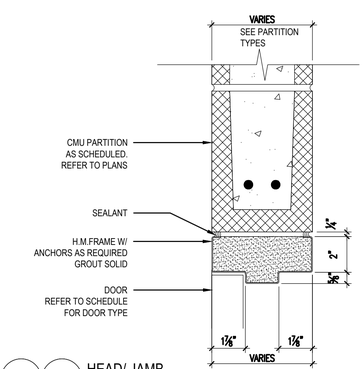

H7 J7 HEAD/ JAMB
GWB PARTITION - 2 HR

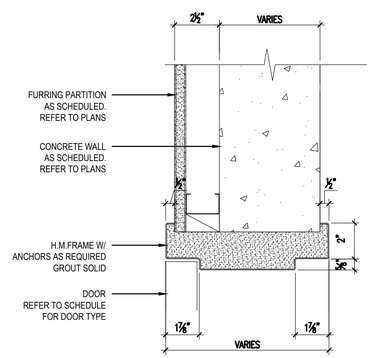

H5 J5 HEAD/ JAMB
GWB PARTITION

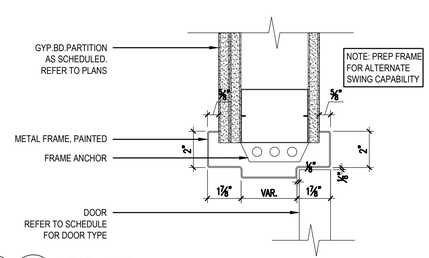

H3 J3 HEAD/ JAMB
GWB PARTITION -1 HR RATED

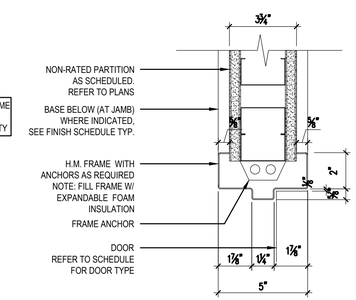

H1 J1 HEAD/ JAMB
GWB PARTITION NON-RATED

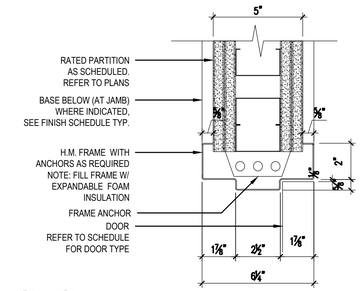

H2 J2 HEAD/ JAMB
GWB PARTITION- 2 HR RATED

3 DOOR HEAD AND JAMB DETAILS
SCALE: 3"=1'-0"

Client:

RANGER PROPERTIES
4790 BROADWAY
NEW YORK, NY 10034

Architect:

FOGARTY FINGER architecture | interiors
69 Walker St, New York, NY 10013
t 212 966 7450 f 212 966 7444

Structural:

Thornton Tomasetti
51 Madison Avenue
New York, NY 10010
Tel 917.661.7800

MEP / FP:

Concessi Engineering, PC
499 7th Avenue, 11th Floor South Tower
New York, NY 10018
Tel 212.629.6810

GEOTECH:

FNA Engineering Services, PC
670 Bergen Boulevard, Floor 2
Ridgefield, NJ 07657
Tel 201.241.2444

FACADE:

Simpson Gumpertz & Heger
550 7th Avenue, 10th Floor
New York, NY 10018
Tel 212.271.7000

CODE:

Metropolis
22 Courtland Street, 10th Floor
New York, NY 10007
Tel 212.233.6344

No.	Date	Issue
02	02.06.2019	DD ESTIMATING
01	11.20.2018	SCHEMATIC DESIGN

Project:

4790 BROADWAY
NEW YORK, NY 10034

Drawing Title:

DOOR DETAILS

Seal & Signature:

DATE (MM-DD-YY): 02-05-2019
PROJECT No.:
DRAWING BY: –
CHK BY: –
DWG. No.: A-905.00
CADD FILE No.:

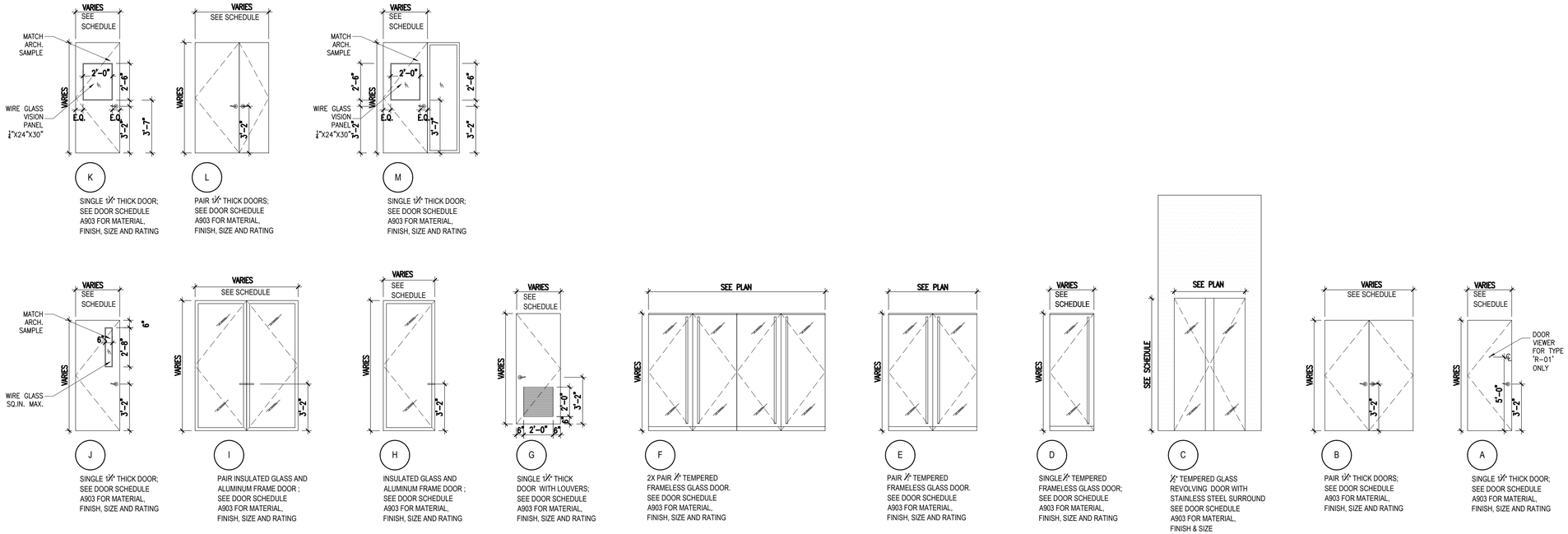

1 DOOR TYPES

SCALE: 1/4"=1'-0"

Client:

RANGER PROPERTIES
4790 BROADWAY
NEW YORK, NY 10034

Architect:

FOGARTY FINGER
architecture | interiors

69 Walker St, New York, NY 10013
t 212 966 7450 f 212 966 7444

Structural:

Thornton Tomasetti
51 Madison Avenue
New York, NY 10010
Tel 917.661.7800

MEP / FP:

Concessi Engineering, PC
499 7th Avenue, 11th Floor South Tower
New York, NY 10018
Tel 212.629.6810

GEOTECH:

FNA Engineering Services, PC
670 Bergen Boulevard, Floor 2
Ridgefield, NJ 07657
Tel 201.241.2444

FACADE:

Simpson Gumpertz & Heger
550 7th Avenue, 10th Floor
New York, NY 10018
Tel 212.271.7000

CODE:

Metropolis
22 Courtland Street, 10th Floor
New York, NY 10007
Tel 212.233.6344

No.	Date	Issue
02	02.06.2019	DD ESTIMATING
01	11.20.2018	SCHEMATIC DESIGN

Project:

4790 BROADWAY
NEW YORK, NY 10034

Drawing Title:

DOOR TYPES

Seal & Signature:

DATE (MM-DD-YY): 02-05-2019
PROJECT No.:
DRAWING BY: –
CHK BY: –
DWG. No.: A-906.00
CADD FILE No.:

4790 BROADWAY_FINISH SCHEDULE 01.30.19

Code	Description		Location	Note:
CO- Concrete				
CO-01	Product: Mfr: Style: Color:	NOT USED	NOT USED	
CP- Concrete Paver				
CP-01	Product: Mfr: Color:	NOT USED	NOT USED	
CPT- Carpet				
CPT-01	Product: Mfr: Collection: Color:	NOT USED	NOT USED	
CT-Ceramic Tile				
CT-01	Product: Mfr: Series: Size: Color: Finish:	Porcelain tile Royal Mosa Terra Maestricht 12"x12" Brazilian Anthracite 216V Matte	Typ. bathroom Apt. floor	Grout: GT-05
CT-02	Product: Mfr: Size: Color: Finish:	Ceramic tile United States Ceramic Tile 4-1/4 x 4-1/4 nominal U769 Dark Grey Bright Semi Gloss	Typ. bathroom Apt. wet walls	See elevations for exact location. Grout: GT-01
FWP-Fabric Wrapped Panel				
FWP-01	Product: Mfr: Color:	NOT USED	NOT USED	
GL-Glass				
GL-01	Product: Mfr: Color: Finish:	NOT USED	NOT USED	
GT- Grout				
GT-01	Product: Mfr: Finish:	Grout Mapei 00 White	grout for CT-02, CT-04, CT-07	1/8" grout thickness
GT-05	Product: Mfr: Finish:	Grout Mapei 47 Charcoal	grout for CT-05	1/8" grout thickness
MT-Metal				
MT-01	Product: Mfr: Finish:	NOT USED	NOT USED	
PL-Plastic Laminate				
PL-01	Product: Mfr: Color: Finish:	PL Formica New White Gloss	laundry cabinets apartment kitchen upper cabinets	
PL-02	Product: Mfr: Color: Finish:	PL Formica 961-90 Fog Gloss	Apartment kitchenette lower cabinets	
PT-Paint				
	Typical Paint Finish as follows: (unless otherwise noted) **Wall: Eggshell** **Ceiling: Flat** **Doors, Trim & Base: Semi Gloss**			
PT-01	Product: Mfr: Color:	Color Stories Benjamin Moore Superwhite	where noted on drawings	
RB-Rubber Base				
RB-01	Product: Mfr: Pattern: Size: Color:	NOT USED	NOT USED	
RF-Rubber Flooring				
RF-01	Product: Mfr: Size: Color:	NOT USED	NOT USED	
RM-Resinous Matrix				
RM-01	Product: Mfr: Color: Finish:	NOT USED	NOT USED	
SS- Solid Surface				
SS-01	Product: Mfr: Size: Color:	Solid surface counter top Ceasarstone 1 1/4" thick Haze 2030	multi-purpose pantry countertop; amenity bathroom countertop; Apartment kitchen countertop and backsplash Apartment bathroom countertops	

ST-Stone				
ST-01	Product: Mfr: Color: Thickness: Finish:	NOT USED	NOT USED	
WB-Wood Base				
WB-01	Product: Mfr: Color: Finish:	NOT USED	NOT USED	
WD-Wood				
WD-01	Product: Mfr: Size: Finish:	NOT USED	NOT USED	
WF-Wood Floor				
WF-01	Product: Mfr: Finish: Size:	NOT USED	NOT USED	
WP-Wall Panel				
WP-01	Product: Mfr: Series: Color: Finish:	NOT USED	NOT USED	
WV-Wood Veneer				
WV-01	Product: Mfr: Color: Finish:	NOT USED	NOT USED	

4790 BROADWAY - APPLIANCES 1/30/2019

Code	Image	Description		Location	Note
AP- Appliance					
AP-01		Product: Mfr: Model#:	28" Top Freezer Refrigerator GE GTE16GTHWW	Apartment Kitchens Studio & 1 Bedrooms	Coordinate hinge side with plans
AP-01		Product: Mfr: Model#:	29.5" Top Freezer Refrigerator GE GTE18GTHWW	Apartment Kitchens 2 Bedrooms, Office, & Tenant RecRM	Coordinate hinge side with plans
AP-02		Product: Mfr: Model#:	29.75" over the range Microwave GE JNM7196DKWW	Apartment Kitchens	MW with recirculating venting
AP-03		Product: Mfr: Model#:	30" Gas Range GE JGB450DEKWW	Apartment Kitchens	
AP-03		Product: Mfr: Model#:	30" Gas Range GE JB450DFWW	Accessory Tenant Rec Room	
AP-05		Product: Mfr: Model#:	Counter Microwave	Apartment Kitchens	
AP-06		Product: Mfr: Model#:	Recirculating Hood	Apartment Kitchens	

TYPICAL APARTMENT FINISH MATRIX

GENERAL NOTES:

REFER TO RCP SHEET A-602.00~A-605.00 FOR APARTMENT CEILING FINISH PT-01 – FLAT FINISH & LIGHT FIXTURE

REFER TO SHEET A-813.00~A-814.00 FOR ALL BATHROOM FINISHES INCLUDING THRESHOLD BETWEEN HALL/ FOYER & BATHROOM

SPACE DESCRIPTION:	SPACE DESCRIPTION:	FINISH CODE – REF. DETAIL:	REMARK:
GENERAL	FLOORING:	WF-01	RUN WOOD FLOOR THROUGHOUT APT. UNLESS NOTED OTHERWISE
	BASE MOLDING:	PT-01 semigloss- B3/A-905.00	
	WALL FINISH:	PT-01 eggshell finish	TYPICAL WALL FINISH: LEVEL 4 GWB FINISH THROUGHOUT
	INTR. DOOR TRIM:	PT-01 semigloss finish	ALL WD. MDF. & WD. DOORS
TYPICAL BASE BUILDING FINISH MATRIX	1. PROVIDE WASHABLE PT-01 AT ALL FLOORS, WALLS, BASES AND CEILINGS AT ALL BACK OF HOUSE ROOMS UNLESS OTHERWISE NOTED. 2. SAME AS #1 EXCEPT PROVIDE 4" HIGH RUBBER BASE RB-01 AT BACK OF HOUSE CORRIDORS, COMPACTOR AND REFUSE DISPOSAL ROOMS 3. PROVIDE RM-01 FLOOR AND RB-01 BASE AT ALL MECHANICAL, ELECTRICAL, COMMUNICATIONS AND MACHINE ROOMS		
KITCHEN	FLOORING:	WF-01	RUN FLOORING UNDER BASE CABINET
BEDROOM CLOSET	FLOORING:	WF-01	
LAUNDRY CLOSET	FLOORING:	WF-01	
ENTRY FOYER	FLOORING:	WF-01	
	APT. ENTRY SADDLE:	ST-01 – 1/A-905.00	STONE SADDLE COLOR/ TBD
BEDROOM	FLOORING:	WF-01	
	BASE MOLDING:	PT-01 semigloss- B3/A-905.00	
	WALL FINISH:	PT-01 eggshell	TYPICAL WALL FINISH: LEVEL 4 GWB FINISH THROUGHOUT

1 INTERIOR FINISH & APPLIANCE SCHEDULE
NTS

Client:
RANGER PROPERTIES
4790 BROADWAY
NEW YORK, NY 10034

Architect:
FOGARTY FINGER architecture | interiors
69 Walker St, New York, NY 10013
t 212 966 7450 f 212 966 7444

Structural:
Thornton Tomasetti
51 Madison Avenue
New York, NY 10010
Tel 917.661.7800

MEP / FP:
Concessi Engineering, PC
499 7th Avenue, 11th Floor South Tower
New York, NY 10018
Tel 212.629.6810

GEOTECH:
FNA Engineering Services, PC
670 Bergen Boulevard, Floor 2
Ridgefield, NJ 07657
Tel 201.241.2444

FACADE:
Simpson Gumpertz & Heger
550 7th Avenue, 10th Floor
New York, NY 10018
Tel 212.271.7000

CODE:
Metropolis
22 Courtland Street, 10th Floor
New York, NY 10007
Tel 212.233.6344

No.	Date	Issue
02	02.06.2019	DD ESTIMATING
01	11.20.2018	SCHEMATIC DESIGN

Project:
4790 BROADWAY
NEW YORK, NY 10034

Drawing Title:
FINISH SCHEDULE

Seal & Signature:

DATE (MM-DD-YY): 02-05-2019
PROJECT No.:
DRAWING BY: –
CHK BY: –
DWG. No.: A-907.00
CADD FILE No.:

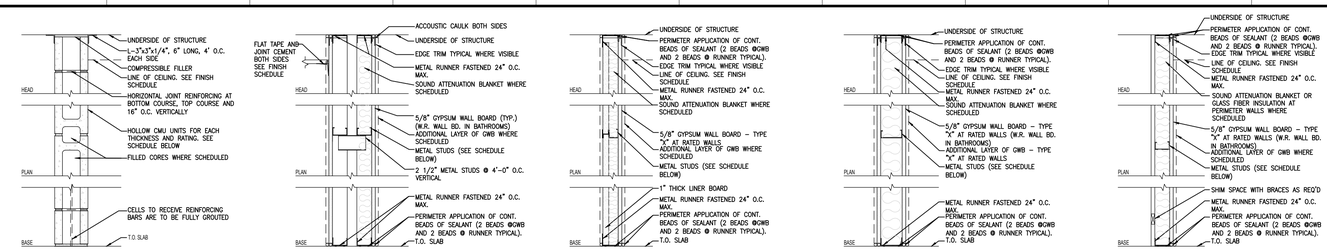

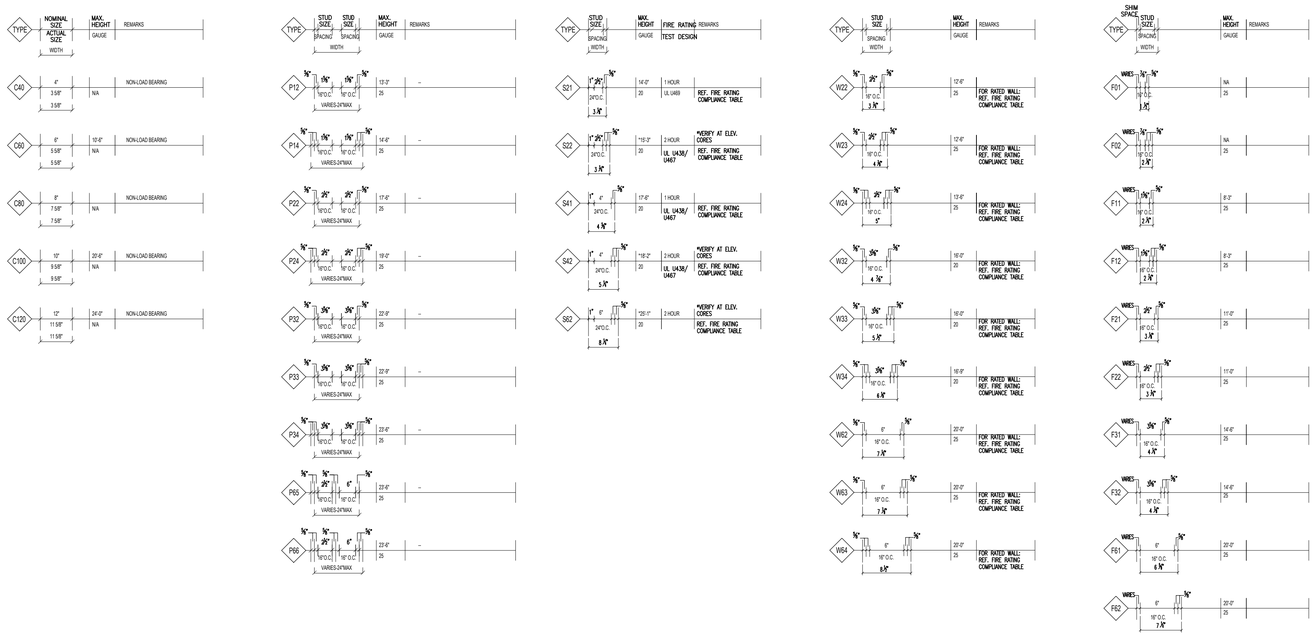

LEGEND

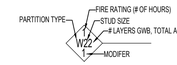

MODIFIERS

1. PARTITION INCLUDES ACOUSTIC BATT INSULATION. MATCH THICKNESS TO STUD SIZE.
2. PARTITION INCLUDES THERMAL MINERAL FIBER INSULATION.
3. PARTITION INCLUDES EXTERIOR INSULATION FINISH SYSTEM.
4. USE 5/8" IMPACT RESISTANT G.W.B (CLASS XC) ON INSIDE OF ROOM IN LIEU OF 5/8" TYPE "X" GYP. BD. STC-50
5. PARTIAL HEIGHT PARTITION REF 3/A-430 FOR DETAILS.
6. USE 5/8" IMPACT RESISTANT G.W.B (CLASS XC) ON BOTH SIDES OF WALL IN LIEU OF 5/8" TYPE "X" GYP. BD. STC-50
8. INCREASE STUD GAUGE THICKNESS TO MEET DEFLECTION CRITERIA FOR PARTITION HEIGHT TO U.O.S.

PARTITION TABLE

PARTITION TYPE	CERTIFICATION TYPE	COMPLIANCE NUMBER	STC RATING
NON-RATED F11 FURRING WALL	UL # MEA #		
NON-RATED F12 FURRING WALL	UL # MEA #		
NON-RATED F21 FURRING WALL	UL # MEA #		
NON-RATED F22 FURRING WALL	UL # MEA #		
NON-RATED F31 FURRING WALL	UL # MEA #		
NON-RATED F61 FURRING WALL	UL # MEA #		
NON-RATED F81 FURRING WALL	UL # MEA #		
1 HOUR W14 STUD WALL	UL # MEA #	U 458	
NON-RATED W02 STUD WALL	UL # MEA #	81-98-M	34
1 HOUR W03 STUD WALL	UL # MEA #	U 419 81-98-M	52
2 HOUR W04 STUD WALL	UL # MEA #	U 419 81-98-M	
2 HOUR W04 STUD WALL	UL # MEA #	U 419 81-98-M	52
NON-RATED W32 STUD WALL	UL # MEA #		
NON-RATED W33 STUD WALL	UL # MEA #		47
1 HOUR W33 STUD WALL	UL # MEA #	U 419 81-98-M	
1 HOUR W33 STUD WALL	UL # MEA #	U 419 81-98-M	57
2 HOUR W34 STUD WALL	UL # MEA #	U 419 81-98-M	57
2 HOUR W34 STUD WALL	UL # MEA #	U 419 81-98-M	
NON-RATED W62 STUD WALL	UL # MEA #		
NON-RATED W63 STUD WALL	UL # MEA #		
NON-RATED W63 STUD WALL	UL # MEA #		
NON-RATED W63 STUD WALL	UL # MEA #		53-54
NON-RATED W64 STUD WALL	UL # MEA #		
1 HOUR W62 STUD WALL	UL # MEA #	U 419 81-98-M	
2 HOUR W64 STUD WALL	UL # MEA #	U 419 81-98-M	
2 HOUR W64 STUD WALL	UL # MEA #	U 419 81-98-M	53-54
2 HOUR S22 SHAFT WALL	UL # MEA #	U 428	
2 HOUR S42 SHAFT WALL	UL # MEA #	U 428	
CHASE WALL P14	UL # MEA #		
CHASE WALL P14	UL # MEA #		55
1 HOUR P14 CHASE WALL	UL # MEA #	U420 or U444	55
2 HOUR P14 CHASE WALL	UL # MEA #	U420 or U444	58-60
CHASE WALL P22	UL # MEA #		
CHASE WALL P22	UL # MEA #		55
1 HOUR P22 CHASE WALL	UL # MEA #	U420 or U444	55
1 HOUR P24 CHASE WALL	UL # MEA #	U420 or U444	58-60
2 HOUR P24 CHASE WALL	UL # MEA #	U420 or U444	58-60
NON-RATED P32 CHASE WALL	UL # MEA #		57
NON-RATED P33 CHASE WALL	UL # MEA #		
2 HOUR P34 CHASE WALL	UL # MEA #	U420 or U444	60-62
NON-RATED C80 CMU WALL	UL # MEA #		52
2 HOUR C80 CMU WALL	UL # MEA #	U906	
2 HOUR C80 CMU WALL	UL # MEA #	U905 I-74-M	52
3 HOUR C80 CMU WALL	UL # MEA #	U904	52
2 HOUR C10 CMU WALL	UL # MEA #	U905	

GENERAL PARTITION NOTES

1. TYPICAL STUD DEFLECTION SHALL BE L/240.
2. PARTITIONS SHALL REST DIRECTLY UPON THE CONCRETE FLOOR CONSTRUCTION AND MAY EXTEND TO THE CONCRETE CONSTRUCTION OF THE FLOOR OR ROOF ABOVE.
3. INCREASE GAUGE THICKNESS OR DECREASE STUD SPACING AS REQUIRED TO MEET DEFLECTION CRITERIA AND WHERE LIMITING HEIGHTS ARE EXCEEDED.
4. PARTITIONS THAT RECEIVE TILE, GLASS, OR SUPPORT WALL HUNG EQUIPMENT SHALL HAVE A MAXIMUM DEFLECTION OF L/360.
5. FOR STEEL VERTICAL REINFORCING SPACING SEE STRUCTURAL DRAWINGS.
6. ALL PARTITIONS ARE CONSTRUCTED OF STUDS UNLESS DESIGNATED OTHERWISE.
7. ALL FIRE RATED PARTITIONS SHALL HAVE FIRE RATED TYPE "X" GYP. BD.
8. ALL TOILETS, MECHANICAL ROOMS, WET COLUMNS AND SIMILAR WET AREAS SHALL HAVE WATER RESISTANT GYP. BD.
9. ALL DRYWALL USED IN FURRING OF EXTERIOR WALL SHOULD BE MOISTURE & MOLD RESISTANT BOARD, TYPICAL.
10. PROVIDE CONTINUOUS 2 HOUR RATED SHAFT WALL AT ALL SLAB OPENINGS INCLUDING, BUT NOT LIMITED TO, ELEVATOR SHAFTS, DUCT SHAFTS, OPEN (NON-SLEEVED) PIPE CHASES AND AS INDICATED ON THE FLOOR PLANS.
11. PROVIDE CONTINUOUS 2 HOUR RATED WALL AT ALL STAIRS AND AS INDICATED ON FLOOR PLANS.
12. PROVIDE 2-HOUR HORIZONTAL SHAFT WALL FOR ALL SHAFTS THAT DO NOT CONTINUE TO THE NEXT LOWER LEVEL AND WHERE SHAFT WALL DOES NOT ALIGN FROM FLOOR TO FLOOR.
13. PROVIDE CONTINUOUS 2 HOUR RATED SHAFT WALL AT TRASH CHUTE.
14. ALL WOOD USED IN PARTITIONS SHALL BE FIRE RETARDANT TREATED.
15. FOR STUD SIZES AT EXTERIOR WALLS SEE EXTERIOR WALL SECTIONS AND DETAILS.
16. SEE FIRE SEPARATION & EGRESS PLANS FOR EXTENT OF FIRE RATED PARTITIONS.
17. PROVIDE NECESSARY BACKING FOR ALL WALL MOUNTED ITEMS INDICATED ON FLOOR PLANS, ELEVATIONS AND SPECIFICATIONS.
18. CM TO COORDINATE APPLICATION OF CONTINUOUS INSULATION & VAPOR BARRIER, TYPICAL.
19. VERIFY CONTINUITY OF ALL FIRE RATED ASSEMBLIES.
20. COORDINATE LOCATION OF STUDS W/EXPOSED FASTENERS @ ALL FIBER CEMENT FINISHED PARTITIONS– SEE DETAILS – PROVIDE METAL GROUNDS AS REQUIRED
21. ALL DRYWALL PARTITIONS AND FURRING AND SOFFITS IN AN EXTERIOR ENVIRONMENT SHALL RECEIVE 5/8" DENSE SHIELD FIREGUARD (TYPE "X", WHERE SCHEDULED), FINISH BOARD, WITH A SUBLAYER OF 1/8" DENSE ARMOR PLUS FIREGUARD C, WHERE REQUIRED TO MEET FIRE RATINGS. SEE PLANS.

Client:

RANGER PROPERTIES
4790 BROADWAY
NEW YORK, NY 10034

Architect:

FOGARTY FINGER
architecture | interiors

69 Walker St, New York, NY 10013
t 212 966 7450 f 212 966 7444

Structural:

Thornton Tomasetti
51 Madison Avenue
New York, NY 10010
Tel 917.661.7800

MEP / FP:

Concessi Engineering, PC
499 7th Avenue, 11th Floor South Tower
New York, NY 10018
Tel 212.629.6810

GEOTECH:

FNA Engineering Services, PC
670 Bergen Boulevard, Floor 2
Ridgefield, NJ 07657
Tel 201.241.2444

FACADE:

Simpson Gumpertz & Heger
550 7th Avenue, 10th Floor
New York, NY 10018
Tel 212.271.7000

CODE:

Metropolis
22 Courtland Street, 10th Floor
New York, NY 10007
Tel 212.233.6344

No.	Date	Issue
02	02.06.2019	DD ESTIMATING
01	11.20.2018	SCHEMATIC DESIGN

Project:

4790 BROADWAY
NEW YORK, NY 10034

Drawing Title:

PARTITION SCHEDULE

Seal & Signature:

DATE (MM-DD-YY): 02-05-2019
PROJECT No.:
DRAWING BY: –
CHK BY: –
DWG. No.: A-908.00
CADD FILE No.:

NEW YORK CITY TRANSIT AUTHORITY GENERAL NOTES

1. THE NYC TRANSIT (NYCT) RESERVES THE RIGHT TO PLACE INSPECTORS, FLAGMEN OR OTHER PERSONNEL IN THE SUBWAY STRUCTURES DURING CONSTRUCTION OF THE PROJECT LINKED BY A TELEPHONE SYSTEM, IF DEEMED NECESSARY, TO OBSERVE THE EFFECT OF THE CONSTRUCTION ON THE TRANSIT FACILITIES. NYCT FURTHER RESERVES THE RIGHT TO PLACE SUCH PERSONNEL WHENEVER, IN ITS OPINION, THE PROJECT CONDITIONS WARRANT SUCH PLACEMENT, REGARDLESS OF DISTANCE. THE COST OF SUCH PERSONNEL, TELEPHONE INSTALLATION AND ANY RE-ROUTES, DIVERSIONS OF THE SERVICE, WORK TRAINS, ETC., MADE NECESSARY BY THE PROJECT, MUST BE BORNE BY THE PROJECT OR THE RESPONSIBLE NEW YORK CITY/STATE AGENCY.
2. ALL ROCK EXCAVATION ADJACENT TO THE TRANSIT STRUCTURE IS TO BE CHANNEL DRILLED TWO FEE BELOW SUBGRADE.

3. IF TOP OF ROCK IS FOUND BELOW SUBWAY STRUCTURE, THE SUBWAY STRUCTURE MUST BE UNDERPINNED IN ACCORDANCE WITH DRAWINGS TO BE SUBMITTED TO NYCT FOR APPROVAL.

4. IF ROCK IS SOFT OR SEAMY, LATERAL SUPPORTS MUST BE PROVIDED BELOW THE SUBWAY STRUCTURE IN ACCORDANCE WITH DRAWINGS TO BE SUBMITTED TO NYCT FOR APPROVAL

5. BLASTING WILL BE PERMITTED ONLY WITH LIGHT CHARGES SUBJECT TO THE APPROVAL OF NYCT'S ENGINEER AND IN ACCORDANCE WITH THE REGULATIONS OF THE FIRE DEPARTMENT. THE CONTRACTOR SHALL PROVIDE A DETAILED MONITORING PLAN, PROVIDING FOR MEASUREMENTS OF BOTH PARTICLE VELOCITY AND DISPLACEMENTS AT CRITICAL LOCATIONS OF THE NYCT STRUCTURE. THE MONITORING PLAN SHALL INCLUDE THRESHOLD AND UPSET LEVELS OF BOTH PARTICLE VELOCITY AND SETTLEMENT TOGETHER WITH AN ACTION PLAN FOR THEIR IMPLEMENTATION. THE CONTRACTOR SHALL SECURE AN APPROVED SEISMOLOGIST TO INSTALL AND OPERATE SUITABLE VELOCITY GAUGES TO CONTINUOUSLY MONITOR PARTICLE VELOCITY AND AN INDEPENDENT LICENSED SURVEYOR TO MONITOR DISPLACEMENTS. THE PRESENCE OF A QUALIFIED TECHNICIAN FROM MONITORING COMPANY IS NECESSARY TO PROVIDE THE VIBRATION READING UPON REQUEST OF THE NYCT ENGINEER. THE THRESHOLD MAXIMUM PARTICLE VELOCITY ABOVE AMBIENT CAUSED BY THE BLASTING WILL BE 0.5 INCH PER SECOND. VALUES EXCEEDING THIS LEVEL WILL BE REVIEWED AND EVALUATED BY NYCT'S ENGINEER. IN NO CASE WILL PARTICLE VELOCITIES EXCEED THE UPSET LEVEL OF 2.0 INCHES PER SECOND.
6. BEFORE PLACING CONCRETE, THE SUBGRADE OF THE FOUNDATIONS IN THE VICINITY OF THE SUBWAY STRUCTURE IS TO BE INSPECTED AND APPROVED BY NYCT'S ENGINEER.

7. IF ANY PORTION OF THE SUBWAY STRUCTURE OR FINISH IS DAMAGED, IT SHALL BE REPAIRED OR REPLACED WITH THE SAME MATERIALS IN PLACE, SUBJECT TO THE APPROVAL OF NYCT'S ENGINEER AND AT THE EXPENSE OF THE PROJECT.

8. EXCAVATION EMBANKMENTS ARE TO BE SHORED AND BRACED. DRAWINGS INDICATING A SUGGESTED METHOD OF CONSTRUCTION ARE TO BE SUBMITTED OT THE NYCT OF APPROVAL IN CONJUNCTION WITH THE PROJECT'S CONTRACT DRAWINGS. IN CASE OF EXCAVATION UNDERMINING THE SUBWAY STRUCTURE, UNDERPINNING MAY BE REQUIRED. DRAWINGS FOR UNDERPINNING ARE TO BE SUBMITTED TO NYCT FOR APPROVAL.

9. TEMPORARY SHORING MAY BE PLACED IN DIRECT CONTACT WITH NYCT STRUCTURE ONLY IF THE NYCT STRUCTURE IS SHOWN TO BE ABLE SUPPORT ALL ANTICIPATED LOADS THAT CAN BE TRANSFERRED THROUGH THE TEMPORARY STRUCTURES WITHOUT DAMAGING THE EXISTING STRUCTURE. AT THE COMPLETION OF THE PROJECT, THESE TEMPORARY SHORING AND BRACING SYSTEMS ARE TO BE REMOVED OR CUT-OFF AS APPROVED BY NYCT.

10.WHEN PILES ARE TO BE DRIVEN OR DRILLED ADJACENT TO THE SUBWAY STRUCTURE, BORING DATA, PILE LAYOUTS, SPECIFICATIONS AND INSTALLATION PROCEDURES ARE TO BE SUBMITTED TO NYCT FOR APPROVAL. VELOCITY METERS ARE TO BE INSTALLED IN THE SUBWAY TUNNEL AT CRITICAL LOCATIONS TO MONITOR INDUCED VIBRATIONS. INDUCED DISPLACEMENTS ALONG THE TUNNEL STRUCTURE AND TRACK INVERT ARE TO BE MONITORED DURING DRIVING OR DRILLING. THE THRESHOLD MAXIMUM PARTICLE VELOCITY ABOVE AMBIENT CAUSED BY THE RIVING OR DRILLING WILL BE 0.5 INCH PER SECOND. VALUES EXCEEDING THIS LEVEL WILL BE REVIEWED AND EVALUATED BY NYCT'S ENGINEER. IN NO CASE WILL PARTICLE VELOCITIES EXCEED THE UPSET LEVEL OF 2.0 INCHES PER SECOND.

11.NO PILES ARE PERMITTED TO BE INSTALLED BY ANY METHOD WITHIN THREE FEET OF SUBWAY STRUCTURE, MEASURED FROM THE EDGE OF THE POLE OR CASING TO THE WALL. CLOSED END PILES WILL NOT BE PERMITTED TO BE DRIVEN WITHIN TEN FEET OF THE SUBWAY STRUCTURE.

12.ALL PILES ARE TO BE PLACED WITHIN A PERAUGERED CASED HOLE TO THE INFLUENCE LINE. THE CASING SHALL BE CLEANED WITHOUT DISTURBING THE SOIL OUTSIDE THE CASING AND THE PILE TO BE PLACED WITHIN THE CASING FOR INSTALLATION. THE PILES MAY THEN BE DRIVEN BEYOND THE INFLUENCE LINE WITHIN THE CASING.

13.THE INFLUENCE LINE SHALL START AT THE BOTTOM OF THE SUBWAY STRUCTURE AND EXTENDING FROM 1H:1V TO 2H:1V SLOP DEPENDING ON THE SOIL PROPERTIES AND GROUND WATER TABLE. FOR PILE INSTALLED WITHIN TEN FEET OF THE SUBWAY STRUCTURE, THE CASING SHALL BE EXTENDED UP TO THE BOTTOM OF THE SUBWAY STRUCTURE.

14.ALL PILES ARE TO BE DRIVEN OR DRILLED A MINIMUM OF TEN FEET BELOW THE INTERSECTION OF THE PILE CENTERLINE AND THE INFLUENCE LINE OF THE SUBWAY STRUCTURE.

15.THE USE OF "DOWN-THE-HOLE-HAMMERS" FOR INSTALLATION OF PILES THROUGH OVERBURDEN AND FILL WILL BE PERMITTED ONLY TO REMOVE BOULDERS. IT WILL NOT BE PERMITTED AS A MATTER OF COURSE TO ADVANCE THE HOLE. THEIR USE TO CONSTRUCT ROCK SOCKETS WILL NOT BE ALLOWED WITHIN 5 FEET OF THE NYCT STRUCTURE. THE USE OF MACHINE UTILIZING AIR FOR SOIL REMOVAL WILL NOT BE ALLOWED.

16.VIBRATORY HAMMERS WILL NOT BE PERMITTED WITHIN 75 FEET OF SUBWAY STRUCTURES. HOERAMS WILL NOT BE PERMITTED WITHIN 25 FEET OF SUBWAYS STRUCTURES.

17.DYNAMIC COMPACTION METHODS USING DROPPED HEAVY WEIGHTS CANNOT BE CONDUCTED WITHIN 1000 FEET OF ANY NYCT STRUCTURE UNLESS IT IS SHOWN THAT INDUCED SETTLEMENTS AND VIBRATIONS WILL NOT DAMAGE THESE STRUCTURES. A SUITABLE MONITORING PLAN INCLUDING SETTLEMENT AND VIBRATION MEASUREMENTS MUST BE APPROVED BY NYCT'S ENGINEER FOR ALL SUCH OPERATIONS WITHIN THESE DISTANCES.

18.THERE SHALL BE NO MACHINE EXCAVATION WITHIN 3 FEET OF NYCT STRUCTURES, POWER DUCT LINES, OR ANY OTHER FACILITIES UNTIL THEY HAVE BEEN CAREFULLY EXPOSED BY HAND EXCAVATION.

19.ALL DEWATERING OPERATIONS CONDUCTED WITHIN 500 FEET OF THE NYCT STRUCTURE MUST BE PERFORMED IN ACCORDANCE WITH DRAWINGS AND PROCEDURES SUBMITTED TO NYCT FOR APPROVAL. THE DISTANCE FROM THE STRUCTURE TO THE DEWATERING OPERATION CAN BE REDUCED PROVIDED THAT SOIL CONDITIONS AT THE SITE INDICATE THAT THE RADIUS OF INFLUENCE OF THE DEWATERING IS LESS THAN 500 FEET. FOR DEWATERING WITHIN THE RADIUS OF INFLUENCE THE DEWATERING PROGRAM MUST BE SHOWN TO HAVE NEGLIGIBLE INFLUENCE ON SETTLEMENTS OF THE NYCT STRUCTURE.

20.SUBWAY ENTRANCES (VENTILATORS, ETC.) ARE TO BE UNDERPINNED OR SHORED AND BRACED IF DIRECTED BY NYCT'S ENGINEER.

21.NYCT AT ITS DISCRETION, RESERVES THE RIGHT TO REQUIRED THE PROJECT TO CLOSE OR MAINTAIN AND PROTECT EXISTING SUBWAY ENTRANCES, VENTILATORS, ETC. ADJACENT TO THE PROJECT DURING CONSTRUCTION. SUCH CONSTRUCTION MAY INCLUDE UNDERPINNING, SHORING, BRACING AND ERECTION OF SUITABLE BARRICADES AND/OR CANOPIES AND SHIELDS. SUCH PROTECTION SHALL BE IN ACCORDANCE WITH DRAWINGS SUBMITTED TO NYCT FOR APPROVAL.

22.IF SHIELDS ARE TO BE INSTALLED TO PROTECT NYCT FACILITIES AND/OR THE PUBLIC, PLANS SHOWING THE LOCATION, TYPA DN METHOD OF ATTACHMENT TO THE TRANSIT STRUCTURE MUST BE SUBMITTED TO NYCT FOR APPROVAL.

23.ALL LUMBER AND PLYWOOD USED FOR PROTECTION OF SUBWAY FACILITIES MUST BE FIRE RETARDANT.

24.SUBWAY EMERGENCY EXITS MUST BE KEPT CLEAR AT ALL TIMES.

25.IN EXCAVATION OVER OR NEAR THE SUBWAY ROOF, SPECIAL CARE SHALL BE EXERCISED SO THAT THE THING CONCRETE PROTECTION OF THE SUBWAY WATERPROOFING IS NOT DAMAGED.

26.BURNING OF, WELDING TO OR DRILLING THROUGH THE EXISTING STEEL STRUCTURES WILL NOT BE PERMITTED EXCEPT AS SHOWN ON DRAWINGS APPROVED BY NYCT.

27.HORIZONTAL AND VERTICAL CONTROL SURVEY DATA OF THE EXISTING NYCT STRUCTURE IS TO BE TAKEN BY A LICENSED LAND SURVEYOR TO MONITOR ANY MOVEMENTS THAT OCCUR DURING CONSTRUCTION AND TO SHOW THE INDUCED MOVEMENTS ARE WITHIN ALLOWABLES NOTED BELOW. IF ANY MOVEMENTS EXCEED ALLOWABLE, REMEDIATION AS APPROVED BY NYCT SHALL BE PERFORMED.

STRUCTURE	NOTIFY NYCT ENGINEER	STOP WORK
ELEVATED	1/8 INCH	1/4 INCH
SUBWAY	1/4 INCH	1/2 INCH

28.BUS ROUTES AFFECTED BY THE PROJECT WILL OR MAY REQUIRED BUS DIVERSIONS. THESE ARRANGEMENTS SHALL BE MADE THROUGH:
MS. SARAH WYSS
ACTING DIRECTOR, OPERATIONS PLANNING
NEW YORK CITY TRANSIT
2 BROADWAY, ROOM A17.82
NEW YORK, NEW YORK, 10004
TELEPHONE NUMBER 646/252-5517

WHEN IMPACTING ANY BUS STOP, SPECIAL OPERATIONS MUST BE NOTIFIED TWO WEEKS IN ADVANCE.

29.DUCT LINES MUST BE MAINTAINED AND PROTECTED DURING CONSTRUCTION. ANY INTERFERENCE WITH DUCT LINES SHOULD BE REPORTED TO NYCT INSPECTOR. WHEN A DUCT LINE CONTAINING CABLES IS TO BE REMOVED, OR WHEN MASONRY ADJACENT THERETO IS TO BE REMOVED, PENETRATED, OR DRILLED, THE WORK SHALL BE DONE WITH HAND LABOR ENTIRELY, USING HAMMER AND CHISEL. JACKHAMMERS, BULL POINTS OR OTHER POWER EQUIPMENT SHALL NOT BE USED.

30.WHERE MANHOLES ARE ENCOUNTERED:

a) THEY SHALL BE PROTECTED AND RAISED OR LOWERED AS REQUIRED, TO MATCH THE NEW STREET GRADE.
b) IF MANHOLE COVERS ARE RAISED OR LOWERED, PROTECT CABLES IN MANHOLE BY WOOD SHEETING OF 2" NOMINAL THICKNESS.
c) PRIOR TO THE START OF CONSTRUCTION OPERATIONS AFFECTING MANHOLES AND DUCT LINES, SEVEN DAYS NOTICE MUST BE GIVEN TO MR. JOHN MALVASIO, P.E., ASSISTANT CHIEF ENGINEERING OFFICER, MAINTENANCE OF WAY, AT 718/694-1358.

31.CONSTRUCTION WORK DONE NEAR VENT GRATINGS AND HATCHES SHALL BE AS FOLLOWS:

a) UNLESS APPROVED BY THE NYCT'S ENGINEER, ALL VENT GRATINGS AND HATCHES SHOULD REMAIN OUTSIDE THE CONSTRUCTION SITE, SEPARATED BY A CONSTRUCTION FENCE. PROTECTIVE SHIELDS MUST BE PROVIDED OVER VENT GRATINGS AS REQUIRED BY NYCT'S ENGINEER.
b) NO BUILDING MATERIAL, VEHICLES OR CONSTRUCTION EQUIPMENT IS TO BE STORED OR RUN OVER VENT GRATINGS, HATCHES OR EMERGENCY EXITS.
c) DETAILS OF SIDEWALK RECONSTRUCTION AROUND VENT GRATINGS, HATCHES AND EMERGENCY EXITS ARE TO BE SUBMITTED TO NYCT FOR APPROVAL.
32.TRACTORS, CRANES, EXCAVATORS ETC. USED IN THE VICINITY OF THE ELEVATED STRUCTURES SHALL BE ISOLATED FROM THE GROUND. SINCE TH ELEVATED STRUCTURE IS USED AS A NEGATIVE RETURN PATH, WITH A CONSEQUENT POTENTIAL BETWEEN IT AND THE GROUND, ANY CONTACT BETWEEN THE STRUCTURE AND THE GROUNDED EQUIPMENT COULD RESULT IN BURNING OF THE STEEL.

33.TEMPORARY CONSTRUCTION SHEDS, BARRICADES OR PLYWOOD PARTITIONS MUST BE A MINIMUM OF 5'-0" FROM EDGE OF FINISHED PLATFORM.

34.STATION AREAS OR STAIRWAY/CLOSINGS: THE GENERAL REQUIREMENTS FOR STATION AREAS OR STAIRWAY/CLOSINGS ARE AS FOLLOWS:

a) ONLY ONE STAIRWAY AT EACH STATION WILL E PERMITTED TO BE CLOSED AT THE SAME TIME. APPROVALS FOR CLOSING ANY STAIRWAY MUST BE OBTAINED FROM THE DIVISION OF STATION OPERATIONS AT LEAST THREE WEEKS IN ADVANCE.
b) MR. ASHOK PATEL, DIRECTOR, OFFICE OF STATION PROGRAMS; TELEPHONE 718/694-1695 OF THE DIVISION OF STATION MUST BE NOTIFIED ONE WEEK PRIOR TO THE ACTUAL CLOSING AND REOPENING OF THE ENTRANCE.
c) SIGNAGE MUST BE SUPPLIED AND POSTED AT LEAST ONE WEEK IN ADVANCE, ADVISING THE PUBLIC OF THE PROPOSED SUBWAY STAIR CLOSING. HOWEVER, IF IT IS AN ENTIRE ENTRANCE CLOSING, SIGNAGE MUST BE POSTED TWO WEEKS IN ADVANCE.
d) THE STREET ENTRANCE STAIRWAY SHOULD NOT BE CLOSED UNLESS MANPOWER AND MATERIALS ARE AVAILABLE TO COMMENT WORK ON DATES PERMITTED.
e) ONCE THE CLOSING IS EFFECTED, CONSTRUCTION SIGNS MUST BE PLACED AT APPROPRIATE LOCATIONS ON THE BARRICADES AT THE STREET AND MEZZANINE LEVELS, STATING THE CONTRACTOR'S NAME, 24 HOUR EMERGENCY TELEPHONE NUMBER, CONTRACT NUMBER, THE DURATION OF THE CLOSING, DIRECTION TO AN ALTERNATE ENTRANCE/EXIT, AND AN APOLOGY FOR THE INCONVENIENCE TO OUR CUSTOMERS.
f) EXISTING STATION SIGNAGE MUST BE ADJUSTED TO REFLECT ANY CHANGES IN ACCESS/EGRESS.
g) BARRICADES ARE TO BE PAINTED AND KEPT GRAFFITI FREE AT ALL TIMES. THE CONTRACTOR MUST MAINTAIN THE BARRICADED AREA CLEAN OF ALL DEBRIS.
h) ALL MATERIALS ARE TO BE PROPERLY STORED AND SECURED AWAY FROM PASSENGER TRAFFIC.
i) THE CONTRACTOR MUST REMOVE ALL WASTE MATERIAL AND BARRICADES FROM ALL STATION AREAS WHEN CONSTRUCTION IS COMPLETED.
j) INSPECTION OF THE AREA UNDER CONSTRUCTION BY AUTHORIZED STATION DEPARTMENT EMPLOYEES SHALL NOT BE INHIBITED.
k) IF STREETLIGHTS ON THE SIDEWALKS ARE AFFECTED, TEMPORARY LIGHTS SHALL BE PROVIDED.

35.IF NEW CONCRETE CONSTRUCTION IS JOINED TO EXISTING CONCRETE, DOWELS AND KEYWAYS ARE TO BE USED IN ACCORDANCE WITH NYCT STANDARDS.

36.IF THE PROJECT INVOLVES CONSTRUCTION OR ALTERATION OF A SUBWAY FACILITY ON PRIVATE PROPERTY, THE PROPERTY OWNERS WILL BE REQUIRED TO ENTER INTO AN AGREEMENT WITH NYCT PERTAINING TO ALL WORK AFFECTING THE TRANSIT FACILITIES AND CLEARLY DEFINING LIMITS AND RESPONSIBILITY FOR MAINTENANCE AND LIABILITY.

37.WHEREVER A NEW SIDEWALK IS BEING PLACED ADJACENT TO NYCT STRUCTURES THE FOLLOWING WILL BE REQUIRED:
a) THE TOP OF THE NEW SIDEWALK SHALL BE FLUSH WITH THE SUBWAY VENT GRATINGS, HATCHES AND EMERGENCY EXITS.
b) THE SLOPE OF THE NEW SIDEWALK SHALL BE SUCH THAT THE DRAINAGE BE AWAY FROM THE STRUCTURES.
c) A 1/2" PREMOLDED FILLER SHALL BE INSTALLED BETWEEN THE NEW SIDEWALK AND NYCT STRUCTURE.
d) WHERE SIDEWALK ELEVATIONS ARE BEING CHANGED DETAILS OF PROPOSED WORK AROUND NYCT STRUCTURES ARE TO BE SUBMITTED FOR APPROVAL.

38.BEFORE ENTERING NYCT PROPERTY, CONTRACTOR OR SUBCONTRACTOR'S PERSONNEL SHALL HAVE ATTENDED NYCT TRACK SAFETY TRAINING AND EXPECT TO FOLLOW NYCT RULES AND REGULATIONS AS PER TRAINING AND ENGINEER INSTRUCTIONS.

39.BEFORE THE START OF ANY WORK, THE CONTRACTOR SHALL MAKE AND EXAMINATION, IN THE PRESENCE OF NYCT'S ENGINEERING, OF THE INTERIOR AND EXTERIOR OF NYCT SUBWAY OR OTHER STRUCTURE ADJACENT TO THE PROPOSED WORK. THE PERSON OR PERSONS AUTHORIZED BY THE CONTRACTOR TO MAKE THESE EXAMINATIONS SHALL BE APPROVED BY THE ENGINEER. THE CONTRACTOR SHALL TAKE ALL PHOTOGRAPHS AS MAY BE NECESSARY OR ORDERED TO INDICATE THE EXISTING CONDITION OF THE NYCT STRUCTURE. ONE COPY OF EACH PHOTOGRAPH, EIGHT INCHES BY TEN INCHES IN SIZE, AND THE NEGATIVE IS TO BE SUBMITTED TO MR. JOHN MALVASIO, P.E., ASSISTANT CHIEF ENGINEERING OFFICER, MAINTENANCE-OF-WAY, 130 LIVINGSTON STREET, ROOM 8044D, BROOKLYN, NEW YORK 11201, TELEPHONE 718/694-1358 BEFORE THE START OF CONSTRUCTION.

40.ALL ARCHITECTURAL DETAILS (TOKEN BOOTHS, RAILINGS, DOORS, ETC.) ARE TO CONFORM TO THE LATEST NYCT STANDARDS. THESE STANDARDS ARE AVAILABLE AT NYCT.

41.STANDARD NYCT INSURANCE CLAUSES ARE TO BE MADE PART OF THE PROJECT'S CONTRACT DRAWINGS. PROOF THAT THE NECESSARY INSURANCE IS IN EFFECT WILL BE REQUIRED BEFORE WORK CAN COMMENCE.

42.AT THE CLOSE OF ANY PROJECT INVOLVING CONSTRUCTION OR ALTERATIONS TO TRANSIT FACILITIES, ON SET OF VELLUMS OR MYLARS, FIVE SETS OF 35MM MICROFILM AND ELECTRONIC COPIES COMPLYING TO MICROSTATION.DGN FORMAT OF "APPROVED AS-BUILTS" MUST BE PROVIDED TO NYCT FOR ITS RECORDS. FOR DETAILS OF SPECIFIC REQUIREMENTS CONTACT NYCT OUTSIDE PROJECTS.

43.AT LEAST SEVEN WORKING DAYS PRIOR TO THE START OF CONSTRUCTION OPERATIONS, **NOTIFICATION MUST BE GIVEN** TO MR. JOHN MALVASIO, P.E., ASSISTANT CHIEF ENGINEER OFFICER, MAINTENANCE-OF-WAY, AT 718/694-1358. THE CONTRACTOR TO PROVIDE TEMPORARY QUARTERS NEAR THE JOB SITE FOR NYCT INSPECTORS CONTAINING A DESK AND TELEPHONE.

MICORPILE INSTALLATION NOTES:

1. ALL PILES SHALL BE INSTALLED AT LOCATION AS SOWN ON CONTRACT DRAWINGS.
2. LAYOUT OF PILE LOCATIONS BY GC (SURVEYED IN PLACE).
3. UTILITY IDENTIFICATION AND EXPLORATION AS NECESSARY BY GC.
4. THE DIAMETER OF THE CUTTING SHOE OF THE CASING SHALL NOT EXCEED THE OUTER DIAMETER OF THE CASING BY 1/4-INCH
5. "GROUT" TO BE MIXTURE OF SAND AND CENMENT-GROUT TO ATTAIN SPECIFIED STRENGTH.
6. A SET OF SIX 2-INCH CUBES OF GROUT SHALL BE TAKEN EACH Day DURING WHICH MICROPILES ARE GROUTED. CUBES SHALL BE THEN TESTED BY AN INDEPENDENT TESTING LABORATORY IN ACCORDANCE WITH THE CONTRACT SPECS.

Client:
RANGER PROPERTIES
4790 BROADWAY
NEW YORK, NY 10034

Architect / Engineer:
FOGARTY FINGER architecture | interiors
69 Walker St, New York, NY 10013
t 212 966 7450 f 212 966 7444

Library Architect:
Andrew Berman Architect, PLLC
77 Chambers Street, 4th Floor
New York, NY 10007
Tel 212.226.5998

Structural:
Thornton Tomasetti
51 Madison Avenue
New York, NY 10010
Tel 917.661.7800

MEP / FP:
Concessi Engineering, PC
499 7th Avenue, 11th Floor South Tower
New York, NY 10018
Tel 212.629.6810

FACADE:
SIMPSON GUMPERTZ & HEGER
550 7th Avenue, 10th Floor
New York, NY 10018
Tel 212.271.7000

CODE:
METROPOLIS
22 Courtland Street, 10th Floor
New York, NY 10007
Tel 212.233.6344

No.	Date	Issue
2	DD ESTIMATING	02.06.2019
1	SCHEMATIC DESIGN	11.20.2018

Project:
4790 BROADWAY
NEW YORK, NY 10034

Drawing Title:
NYCTA GENERAL NOTES I

Seal & Signature:

DATE (MM-DD-YY): 02/06/19
PROJECT No.: N18168.00
DRAWING BY: Author
CHK BY: Checker
DWG. No.: FO-001.00
CADD FILE No.:

C:\Scratch\N18168.00_4790 BROADWAY_R19_CWard.rvt

MICORPILE INSTALLATION PROCEDURE

1. MOBILIZATION TO SITE.
2. SET UP RIG ON PROPER LOCATION AND PLUM MAST
3. DRILL IN PILES USING DUPLEX DRILLING METHODS. FLUSH WITH WATER ONLY.
4. WHEN CLEANING THE INSIDE CASING 2-DIAMTERS OR TWO FOOT SHOULD BE MAINTAINED BEHIND THE TIP OF THE OUTER CASING.
5. CASING IS DRILLED-IN TO THE BOTTOM OF THE GROUT (BOND) ZONE AS INDICATED ON DRAWINGS.
6. FLUSH HOLE CLEAN OF SPOILS. IF PILE TIP IS BELOW GROUND WATER TABLE (GWT). FLUID LEVEL INSIDE CASING TO BE MAINTAINED AT TOP OF PILE DURING CLEAN OUT. A BUCKED OR AUGER MAY BE USED TO CLEAN HOLE. AIR MAY BE USED IN COMPACTED TILL OR ROCK).
7. PLACE 3/7-INCH DIAMETER PBS GROUT TUBE TO WITHIN 2-FEET OF BOTTOM OF CASING. AND GROUT THE PILE FROM THE BOTTOM TO DISPLACE THE DRILLING FLUID. CONTINUE GROUTING UNTIL GOOD GROUT FLOWS OUT THE TOP OF THE PILE.
8. INTRODUCE REINFORCING THREADBAR WITH SPACERS, AND PUSH TO THE BOTTOM OF PILE.
9. START PULLING THE CASING IN 5-FOOT INCREMENTS WHILE PUMPING GROUT AND MAINTAINING 75 PSI GROUT PRESSURE BUT NOT TO EXCEEDING 100 PSI. NOTE: GROUTING OF THE BOND ZONE WILL CEASE IF OVER 150% OF ITS THEORETICAL VOLUME IS PUMPED IN. ACTUAL VOLUME TO BE SPECIFIED BY CONTRACTOR.
10. WHEN CASING REACHES THE ELEVATION REQUIRED BY THE INFLUENCE LINE IT SHALL BE PUSHED BACK DOWN 5-FEET.
11. CUT THREADBAR TO PROPER ELEVATION AS SHOWN ON CONTRACT DRAWINGS.
12. THE INSTALLATION OF ADDITIONAL PILES IN THE SAME CAP SHALL NOT BE INSTALLED UNTIL GROUT HAS CURED FOR AT LEAST 24-HOURS.

MICROPILES DESIGN CRITERIA

1. DESIGN MICROPILES PER NYC BUILDING CODE 2014 SECTIONS 1808.3, 1808.8 TABLE 1808.8, 1810.1.1, AND 1810.8
2. USE LATEST AISC DESIGN METHOD TO DESIGN MICROPILES AS A FREE STANDING COLUMN FROM BOTTOM OF PILE CAP TO NYCT INFLUENCE LINE. USING K= 1

UTILITY PROTECTION NOTES

1. THE CONTRACTOR IS REQUIRED TO NOTIFY THE APPROPRIATE AUTHORITY, INCLUDING NYCTA, FOR NOTICE OF CONSTRUCTION/EXCAVATION AND UTILITY MARK OUT PRIOR TO THE START OF CONSTRUCTION IN ACCORDANCE WITH STATE LAW. THE CONTRACTOR IS REQUIRED TO CONFIRM THE HORIZONTAL AND VERTICAL LOCATION OF UTILITIES IN THE FIELD. SHOULD A CONFLICT EXIST BETWEEN THE FIELD LOCATION OF A UTILITY AND THE LOCATION SHOWN ON THE PLAN SET OR SURVEY, THE CONTRACTOR SHALL NOTIFY JZN ENGINEERING, PC. IMMEDIATELY IN WRITING.
2. THE CONTRACTOR IS RESPONSIBLE TO PROTECT AND MAINTAIN IN OPERATION ALL UTILITIES NOT DESIGNATED TO BE REMOVED.
3. THE CONTRACTOR IS RESPONSIBLE TO MAINTAIN A RECORD SET OF PLANS REFLECTING THE LOCATION OF EXISTING UTILITIES THAT HAVE BEEN CAPPED, ABANDONED, OR RELOCATED BASED ON THE DEMOLITION/REMOVAL ACTIVITIES REQUIRED IN THIS PLAN SET. THIS DOCUMENT SHALL BE PROVIDED TO THE OWNER FOLLOWING COMPLETION OF WORK.
4. THE CONTRACTOR IS RESPONSIBLE TO MAINTAIN A RECORD OF THE AS-BUILT LOCATIONS OF ALL PROPOSED UNDERGROUND INFRASTRUCTURE. THE CONTRACTOR SHALL NOTE ANY DISCREPANCIES BETWEEN THE AS-BUILT LOCATIONS AND THE LOCATIONS DEPICTED WITHIN THE PLAN SET. THIS RECORD SHALL BE PROVIDED TO THE OWNER FOLLOWING COMPLETION OF WORK.
5. CONTRACTOR IS RESPONSIBLE TO PROVIDE PROTECTION OF ALL EXISTING UNDERGROUND UTILITIES VIA APPROPRIATE METHODS (EG. HEAVY DUTY STEEL PLATES CAPABLE OF SUPPORTING ALL TRUCK LOADS, CONSTRUCTION TRAFFIC CONTROL, ETC)

NYCT "NOT FOR BENEFIT" INSURANCE REQUIREMENTS

SECTION A: INSURANCE REQUIREMENTS
THE PERMITEE AT ITS SOLE COST AND EXPENSE SHALL CARRY AND MAINTAIN POLICIES OF INSURANCE AT ALL TIMES DURING THE PERIOD OF PERFORMANCE UNDER THE AGREEMENT AS HEREIN SET FORTH BELOW:
1. WORKERS' COMPENSATION: INCLUDING EMPLOYER'S LIABILITY INSURANCE WITH LIMITS OF LIABILITY NOT LESS THAN $2,000,000 WHICH MAY BE MET BY A COMBINATION OF PRIMARY AND EXCESS INSURANCE MEETING THE STATUTORY LIMITS OF NEW YORK STATE.

2. COMMERCIAL GENERAL LIABILITY: (ISO 2001 FORM OR EQUIVALENT) APPROVED BY PERMITTOR IN THE PERMITEE'S NAME WITH LIMITS OF LIABILITY NOT LESS THAN $3,000,000 FOR EACH OCCURRENCE ON A COMBINED SINGLE LIMIT BASIS FOR INJURIES TO PERSONS (INCLUDING DEATH) AND DAMAGE TO PROPERTY, $3,000,000 GENERAL AGGREGATE AND $3,000,000 IN THE AGGREGATE WITH RESPECT TO PRODUCTS/COMPLETED OPERATIONS. THE LIMITS MAY BE PROVIDED IN THE FORM OF A PRIMARY POLICY OR COMBINATION OF PRIMARY AND UMBRELLA/EXCESS POLICY. WHEN THE MINIMUM CONTRACT AMOUNTS CAN ONLY BE MET WHEN APPLYING THE UMBRELLA/EXCESS POLICY, THE UMBRELLA/EXCESS POLICY MUST FOLLOW FORM OF THE UNDERLYING POLICY AND BE EXTEND TO "DROP DOWN" TO BECOME PRIMARY IN THE EVENT PRIMARY LIMITS ARE REDUCED OR AGGREGATE LIMITS ARE EXHAUSTED. SUCH INSURANCE SHALL BE PRIMARY AND NON-CONTRIBUTORY TO ANY OTHER VALID AND COLLECTIBLE INSURANCE AND MUST BE EXHAUSTED BEFORE IMPLICATING AND PERMITTOR/MTA POLICY AVAILABLE.
SUCH POLITY SHOULD BE WRITTEN ON AN OCCURRENCE FORM, AND SHALL INCLUDE THE FOLLOWING COVERAGES:
· ADDITIONAL INSURED ENDORSEMENT (I.S.O. FORM CG 20 26 07/04) VERSION OR EQUIVALENT APPROVED BY THE PERMITTOR, SHALL NAME THE INDEMNITEES AS REFERENCED UNDER SECTION B OF THE AGREEMENT AS ADDITIONAL INSUREDS.
· CONTRACTUAL LIABILITY ASSUMED BY THE PERMITTEE UNDER THIS AGREEMENT;
· PERSONAL OR ADVERTISING INJURY;
· PRODUCTS-COMPLETED OPERATIONS'
· INDEPENDENT CONTRACTORS;
· "XCU" (EXPLOSION, COLLAPSE, AND UNDERGROUND HAZARDS) WHERE NECESSARY;
· CONTRACTUAL LIABILITY EXCLUSION, APPLICABLE TO CONSTRUCTION OR DEMOLITION OPERATIONS TO BE PERFORMED WITHIN 50 FEET OF RAILROAD TRACKS, MUST BE REMOVED WHERE NECESSARY;

3. BUSINESS AUTOMOBILE LIABILITY: (ISO FORM CA 00 01 10 01 OR EQUIVALENT) APPROVED BY THE PERMITTOR IS REQUIRED IF THE PERMITTEE'S VEHICLE ENTER PERMITTOR'S PROPERTY. THE INSURANCE MUST BE IN THE NAME OF THE PERMITEE OR ITS CONTRACTOR ENTERING THE PERMITTOR'S PROPERTY WITH LIMITS OF LIABILITY IN THE AMOUNT OF NOT LESS THAN $2,000,000 EACH ACCIDENT FOR CLAIMS FOR BODILY INJURIES (INCLUDING DEATH) TO PERSONS AND FOR DAMAGE TO PROPERTY ARISING OUT OF THE OWNERSHIP, MAINTENANCE OR USE OF ANY OWNED, HIRED OR NON0OWNED MOTOR VEHICLE.

4. RAILROAD PROTECTIVE LIABILITY: (ISO-RIMA OR EQUIVALENT FORM) APPROVED BY PERMITTOR COVERING THE WORK TO BE PERFORMED AT THE DESIGNATED JOB SITE AND AFFORDING PROTECTION FOR DAMAGES ARISING OUT OF BODILY INJURY OR DEATH, PHYSICAL DAMAGE TO OR DESTRUCTION OF PROPERTY, INCLUDING DAMAGE TO THE INSURED'S OWN PROPERTY AND CONFORMING TO THE FOLLOWING:

· THE POLICY SHALL BE ISSUED TO THE "NAMED INSUREDS" LISTED UNDER SECTION B.
· THE LIMIT OF LIABILITY SHALL NOT BE LESS THAN $2,000,000 PER OCCURRENCE, SUBJECT TO A $6,000,000 ANNUAL AGGREGATE;
· POLICY MUST BE ENDORSED TO PROVIDE COVERAGE FOR CLAIMS ARISING FROM INJURY TO EMPLOYEES COVERED BY FEDERAL EMPLOYER'S LIABILITY ACT (FELA)
· INDICATE THE NAME AND ADDRESS OF THE DESIGNATED CONTRACTOR, PROJECT LOCATION AND DESCRIPTION OF WORK, AND PERMIT NUMBER IF APPLICABLE.
· EVIDENCE OF RAILROAD PROTECTIVE LIABILITY INSURANCE, MUST BE PROVIDED IN THE FORM OF A POLICY. A DETAILED **INSURANCE BINDER (ACORD OR MANUSCRIPT FORM)** WILL BE ACCEPTED PENDING ISSUANCE OF THE POLICY, WHICH MUST BE PROVIDED WITHIN 30 DAYS FROM THE EFFECTIVE DATE.**5. ENVIRONMENTAL INSURANCE:** IN THE EVENT ENVIRONMENTAL OR POLLUTION EXPOSURES EXIST, THE PERMITTEE SHALL REQUIRE THE ENVIRONMENTAL CONTRACTOR, OR SUB-CONTRACTOR TO PROVIDE THE APPLICABLE INSURANCE COVERING SUCH EXPOSURE. THE LIMITS AND TYPES OF INSURANCE PROVIDED MUST BE SATISFACTORY TO THE PERMITTOR AND APPROVED PRIOR TO THE START OF THE WORK.

SECTION B: INDEMNITEES (ADDITIONAL INSUREDS/NAMED INSUREDS)

NEW YORK CITY TRANSIT AUTHORITY ("NYCT"), THE MANHATTAN AND BRONX SURFACE TRANSIT OPERATING AUTHORITY ("MaBSTOA"), THE STATEN ISLAND RAPID TRANSIT OPERATING AUTHORITY ("SIRTOA"), THE METROPOLITAN TRANSPORTATION AUTHORITY ("MTA") INCLUDING ITS SUBSIDIARIES AND AFFILIATES, MTA CAPITAL CONSTRUCTION ("MTACC"), MTA BUS COMPANY ("MTA BUS"), AND THE CITY OF NEW YORK ("CITY" AS OWNER) AND THE RESPECTIVE AFFILIATES AND SUBSIDIARIES EXISTING CURRENTLY OR IN THE FUTURE OF AN SUCCESSORS TO EACH INDEMNIFIED PARTIES LISTED HEREIN.

SECTION C: GENERAL INSURANCE REQUIREMENTS

1. INSURANCE COMPANIES: ALL OF THE INSURANCE REQUIRED BY THIS ARTICLE SHALL BE WITH COMPANIES LICENSED OR AUTHORIZED TO DO BUSINESS IN THE STATE OF NEW YORK WITH AN A.M. BEST COMPANY RATING OF NOT LESS THAN A-/VII OR BETTER AND REASONABLY APPROVED BY THE PERMITTOR/MTA.

2. FORMS: ALL FORMS SHALL COMPLY WITH THE INSURANCE OFFICES, INC. ("ISO") OR ITS EQUIVALENT APPROVED BY THE INSURANCE DEPARTMENT OF THE STATE OF NEW YORK.

3. POLICY DEDUCTIBLE/SELF INSURED RETENTION: INSURANCE MAY CONTAIN A DEDUCTIBLE AND OR SELF-INSURED RETENTION AND SHALL NOT EXCEED $100,000. THE PERMITTEE SHALL BE RESPONSIBLE FOR ALL CLAIM EXPENSES AND LOSS PAYMENTS WITHIN THE DEDUCTIBLE OR SELF-INSURED RETENTION.

4. POLICY TERMS: THESE POLICIES MUST: (i) BE WRITTEN IN ACCORDANCE WITH THE REQUIREMENTS OF THE PARAGRAPHS ABOVE, AS APPLICABLE; (ii) BE ENDORSED IN FORM ACCEPTABLE TO INCLUDE A PROVISION THAT SHOULD THE POLICY BE CANCELLED, MATERIALLY CHANGED, OR NOT RENEWED, NOTICE SHALL BE DELIVERED IN ACCORDANCE WITH THE INSURANCE POLICY PROVISIONS TO THE PERMITTOR, AND (iii) STATE OR BE ENDORSED TO PROVIDE THAT THE COVERAGE AFFORDED UNDER THE PERMITTEE'S POLICIES SHALL APPLY ON A PRIMARY AND NOT ON AN EXCESS OR CONTRIBUTING BASIS WITH ANY POLICIES WHICH MAY BE AVAILABLE TO THE PERMITTOR/MTA, AND ALSO THAT THE PERMITTEE'S POLICIES, PRIMARY AND EXCESS, MUST BE EXHAUSTED BEFORE IMPLICATING ANY PERMITTOR/MTA POLICY AVAILABLE. (iv) IN ADDITION, PERMITTEE'S POLICIES SHALL STATE OR BE ENDORSED TO PROVIDE THAT, IF A SUBCONTRACTOR'S POLICY CONTAINS ANY PROVISION THAT MAY ADVERSELY AFFECT WHETHER PERMITTEE'S POLICIES ARE PRIMARY AND MUST BE EXHAUSTED BEFORE IMPLICATING ANY PERMITTOR/MTA POLICY AVAILABLE, PERMITTEE'S AND SUBCONTRACTOR'S POLICIES SHALL NEVERTHELESS BE PRIMARY AND MUST BE EXHAUSTED BEFORE IMPLICATING ANY PERMITTOR/MTA POLICY AVAILABLE. AT LEAST TWO (2) WEEKS PRIOR TO THE EXPIRATION OF THE POLICIES, THE PERMITEE SHALL ENDEAVOR TO PROVIDE EVIDENCE OF RENEWAL OR REPLACEMENT POLICIES OF INSURANCE, WITH TERMS AND LIMITS NO LESS FAVORABLE THAN THE EXPIRING POLICIES.

SECTION D: SUBMISSION OF INSURANCE

CERTIFICATES OF INSURANCE MAY BE SUPPLIED AS EVIDENCE OF POLICIES EXCEPT FOR RAILROAD PROTECTIVE LIABILITY. HOWEVER, IF REQUESTED BY THE PERMITTOR, THE PERMITEE SHALL DELIVER TO THE PERMITTOR WITHIN FORTY-FIVE (45) DAYS A COPY OF SUCH POLICIES, CERTIFIED BY THE INSURANCE CARRIER AS BEING TRUE AND COMPLETE. IF A CERTIFICATE OF INSURANCE IS SUBMITTED, IT MUST: (1) BE PROVIDED ON THE PERMITTOR CERTIFICATE OF INSURANCE; (2) BE SIGNED BY AN AUTHORIZED REPRESENTATIVE OF THE INSURANCE CARRIER OR PRODUCER AND NOTARIZED; (3) DISCLOSE ANY DEDUCTIBLE, SELF-INSURED RETENTION, SUB LIMIT, AGGREGATE LIMIT OR ANY EXCLUSIONS TO THE POLICY THAT MATERIALLY CHANGE THE COVERAGE; (4) INDICATE THE ADDITIONAL INSURED AS REQUIRED HEREIN UNDER SECTION B; THE PERMITEE MUST PROVIDE A COPY OF THE ADDITIONAL INSURED ENDORSEMENT (ISO) FORM CG 20 26 07/04 OR ITS EQUIVALENT AND MUST REFERENCE THE POLICY INFORMATION; (5) INDICATE PROJECT NAME AND LOCATION ON THE CERTIFICATE; AND (6) EXPRESSLY REFERENCE THE INCLUSION OF ALL REQUIRED ENDORSEMENTS.
THE PERMITEE OR ITS CONTRACTOR/SUBCONTRACTOR PERFORMING THE WORK SHALL FURNISH EVIDENCE OF ALL POLICIES BEFORE ANY WORK IS STARTED TO THE APPROPRIATE DEPARTMENT:
NEW AGREEMENTS:
MTA/NYCT MOW ENGINEERING
ATTENTION: MR. JOHN MALVASIO
130 LIVINGSTON STREET
BROOKLYN, NY 11201

RENEWAL INSURANCE:
MTA RISK INSURANCE MANAGEMENT
ATTENTION: RUTH APOSTOL
2 BROADWAY – 21ST FLOOR
NEW YORK, NY 10004

SECTION E: NO LIMIT OF LIABILITY
THE MINIMUM AMOUNTS OF INSURANCE REQUIRED IN THE DETAIL DESCRIPTION OF POLICIES ABOVE SHALL NOT BE CONSTRUED TO LIMIT THE EXTENT OF THE PERMITTEE'S LIABILITY UNDER THIS AGREEMENT.

SECTION F: RIGHT TO REQUEST ADDITIONAL INSURANCE
PERMITTEE FURTHER AGREES TO PROVIDE, AT PERMITTEE'S SOLE COST AND EXPENSE, SUCH INCREASED OR EXPANDED INSURANCE COVERAGE AS PERMITTOR MAY FROM TIME TO TIME DEEM APPROPRIATE.

SECTION G: EVENT OF DEFAULT
IF, AT ANY TIME DURING THE PERIOD OF THIS AGREEMENT, INSURANCE AS REQUIRED IS NOT IN AFFECT, OR PROOF THEREOF IS NOT PROVIDED TO THE PERMITTOR, THE PERMITTOR SHALL HAVE THE OPTIONS TO (i) DIRECT THE PERMITTEE TO SUSPEND WORK OR OPERATION WITH NO ADDITIONAL COST OR EXTENSION OF TIME DUE ON ACCOUNT THEREOF; OR (ii) TREAT SUCH FAILURE AS AN EVENT OF DEFAULT.

SECTION H: NOTICE OF CLAIM
THE PERMITTEE SHALL IMMEDIATELY FILE WITH NYCT/MTA'S TORT DIVISION (WITH A COPY TO THE PROJECT MANAGER) 130 LIVINGSTON STREET, 11TH FLOOR, BROOKLYN, NY 11201, A NOTICE OF ANY OCCURRENCE LIKELY TO RESULT IN A CLAIM AGAINST NYCT/MTA AND SHALL ALSO FILE WITH THE TORTS DIVISION DETAILED SWORN PROOF OF INTEREST AND LOSS WITH THE CLAIM. THIS PARAGRAPH SHALL SURVIVE THE EXPIRATION OR EARLIER TERMINATION OF THE CONTRACT.

Client:
RANGER PROPERTIES
4790 BROADWAY
NEW YORK, NY 10034

Architect / Engineer:
FOGARTY FINGER architecture | interiors
69 Walker St, New York, NY 10013
t 212 966 7450 f 212 966 7444

Library Architect:
Andrew Berman Architect, PLLC
77 Chambers Street, 4th Floor
New York, NY 10007
Tel 212.226.5998

Structural:
Thornton Tomasetti
51 Madison Avenue
New York, NY 10010
Tel 917.661.7800

MEP / FP:
Concessi Engineering, PC
499 7th Avenue, 11th Floor South Tower
New York, NY 10018
Tel 212.629.6810

FACADE:
SIMPSON GUMPERTZ & HEGER
550 7th Avenue, 10th Floor
New York, NY 10018
Tel 212.271.7000

CODE:
METROPOLIS
22 Courtland Street, 10th Floor
New York, NY 10007
Tel 212.233.6344

No.	Date	Issue

Project:
4790 BROADWAY
NEW YORK, NY 10034

Drawing Title:
NYCTA GENERAL NOTES II

Seal & Signature:

DATE (MM-DD-YY):	02/06/19
PROJECT No.:	N18168.00
DRAWING BY:	Author
CHK BY:	Checker
DWG. No.:	FO-002.00
CADD FILE No.:	

C:\Scratch\N18168.00_4790 BROADWAY_R19_CWest.rvt

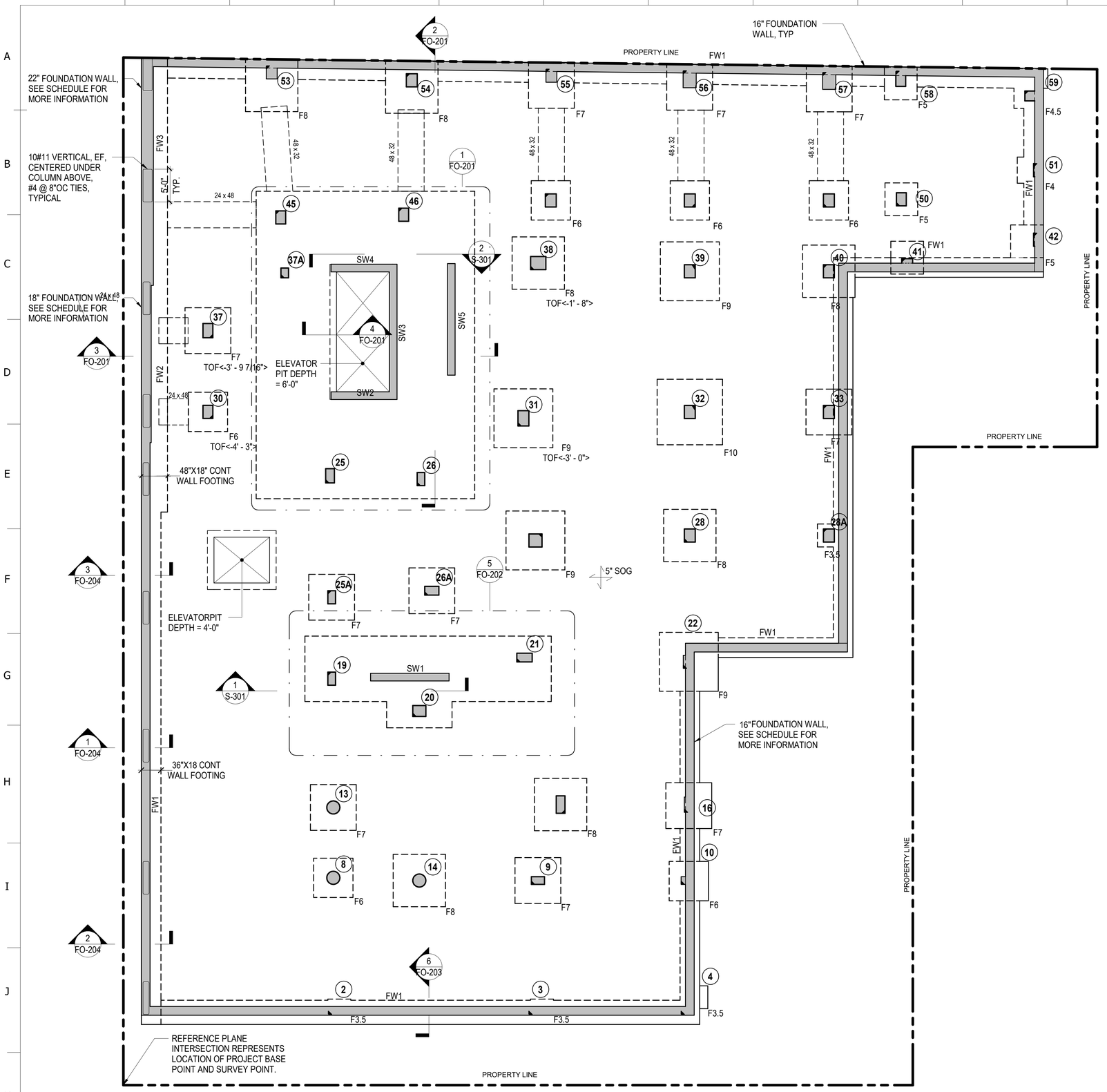

1 **CELLAR**
1/8" = 1'-0"

SHEET NOTES:

1. SEE GENERAL NOTES FOR CONCRETE COMPRESSIVE STRENGTH.
2. T/SLAB = EL [- 12' - 6"] , UON
2. T/FOOTING ELEVATION RELATIVE TO EL [- 13'- 6"] INDICATED <+/-X'-XX">
3. THICKNESS OF SLAB ON GRADE TO BE 5", UON.
   PROVIDE WWR4x4 X W2.9xW2.9.
4. FOR ADDITIONAL INFORMATION REFER TO THE FOLLOWING DRAWINGS:

DRAWING LISTS, GENERAL NOTES AND LOADING DIAGRAMS	S0 SERIES DRAWINGS
TYPICAL FOUNDATION DETAILS	S2 SERIES DRAWINGS
LATERAL SYSTEM ELEVATIONS, CONNECTION FORCES AND DETAILS	S3 SERIES DRAWINGS
CONCRETE SUPERSTRUCTURE SCHEDULES AND DETAILS	S4 SERIES DRAWINGS
STEEL SUPERSTRUCTURE SCHEDULES AND DETAILS	S5 SERIES DRAWINGS
MASONRY DETAILS	S6 SERIES DRAWINGS

Client:

RANGER PROPERTIES
4790 BROADWAY
NEW YORK, NY 10034

Architect / Engineer:

FOGARTY FINGER architecture | interiors
69 Walker St, New York, NY 10013
t 212 966 7450 f 212 966 7444

Library Architect:

Andrew Berman Architect, PLLC
77 Chambers Street, 4th Floor
New York, NY 10007
Tel 212.226.5998

Structural:

Thornton Tomasetti
51 Madison Avenue
New York, NY 10010
Tel 917.661.7800

MEP / FP:

Concessi Engineering, PC
499 7th Avenue, 11th Floor South Tower
New York, NY 10018
Tel 212.629.6810

FACADE:

SIMPSON GUMPERTZ & HEGER
550 7th Avenue, 10th Floor
New York, NY 10018
Tel 212.271.7000

CODE:

METROPOLIS
22 Courtland Street, 10th Floor
New York, NY 10007
Tel 212.233.6344

No.	Date	Issue
2	DD ESTIMATING	02.06.2019
1	SCHEMATIC DESIGN	11.20.2018

Project:

4790 BROADWAY
NEW YORK, NY 10034

Drawing Title:

FOUNDATION PLAN

Seal & Signature:

DATE (MM-DD-YY): 02/06/19
PROJECT No.: N18168.00
DRAWING BY: AP
CHK BY: SB
DWG. No.:
FO-100.00
CADD FILE No.:

C:\Scratch\N18168.00_4790 BROADWAY_R19_CWard.rvt

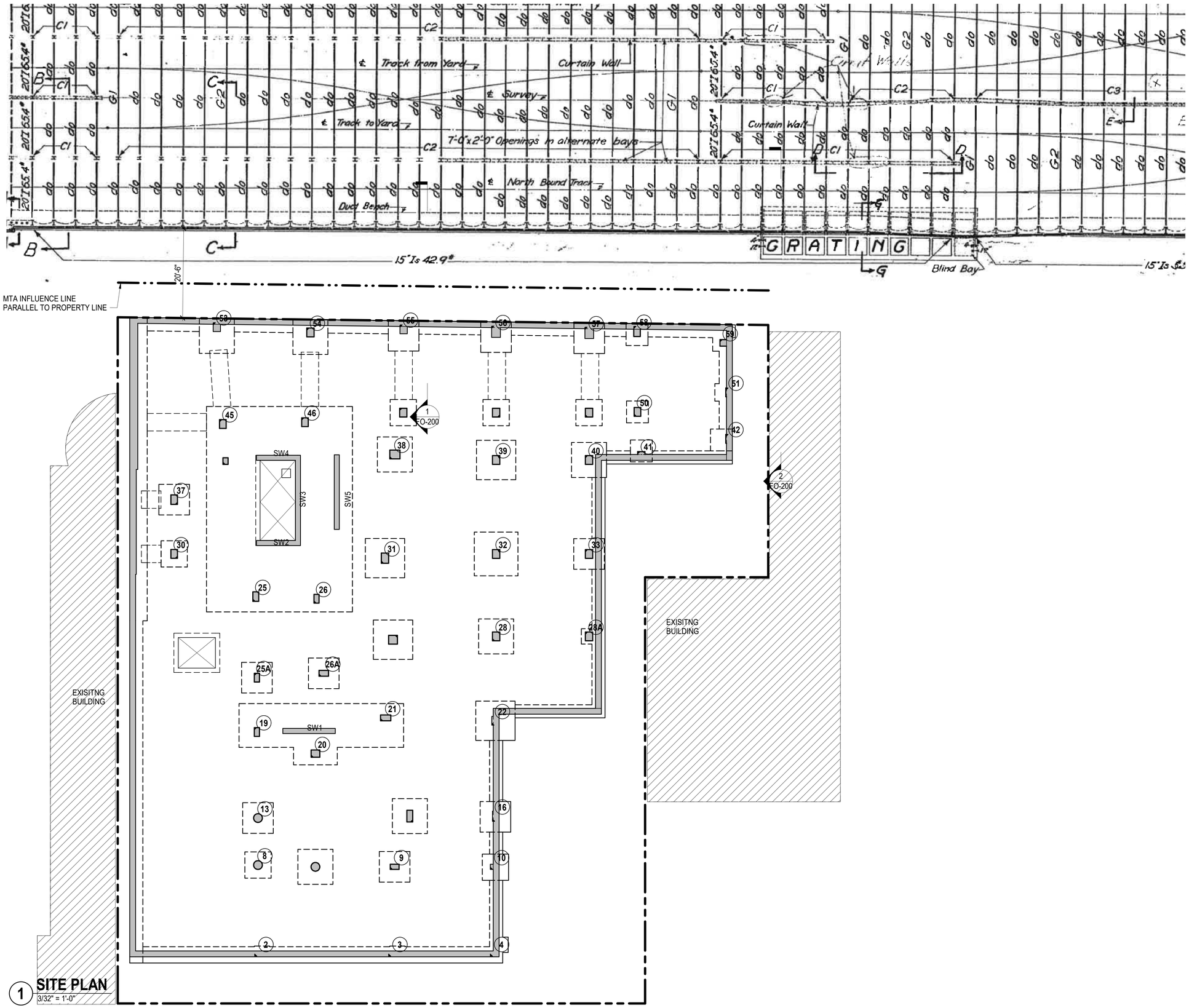

1 SITE PLAN
3/32" = 1'-0"

Client:

RANGER PROPERTIES
4790 BROADWAY
NEW YORK, NY 10034

Architect / Engineer:

FOGARTY FINGER
architecture | interiors

69 Walker St, New York, NY 10013
t 212 966 7450 f 212 966 7444

Library Architect:

Andrew Berman Architect, PLLC
77 Chambers Street, 4th Floor
New York, NY 10007
Tel 212.226.5998

Structural:

Thornton Tomasetti
51 Madison Avenue
New York, NY 10010
Tel 917.661.7800

MEP / FP:

Concessi Engineering, PC
499 7th Avenue, 11th Floor South Tower
New York, NY 10018
Tel 212.629.6810

FACADE:

SIMPSON GUMPERTZ & HEGER
550 7th Avenue, 10th Floor
New York, NY 10018
Tel 212.271.7000

CODE:

METROPOLIS
22 Courtland Street, 10th Floor
New York, NY 10007
Tel 212.233.6344

No.	Date	Issue
2	DD ESTIMATING	02.06.2019
1	SCHEMATIC DESIGN	11.20.2018

Project:

4790 BROADWAY
NEW YORK, NY 10034

Drawing Title:

SITE PLAN

Seal & Signature:

DATE (MM-DD-YY):	02/06/19
PROJECT No.:	N18168.00
DRAWING BY:	AP
CHK BY:	SB
DWG. No.:	FO-101.00
CADD FILE No.:	4 of 55

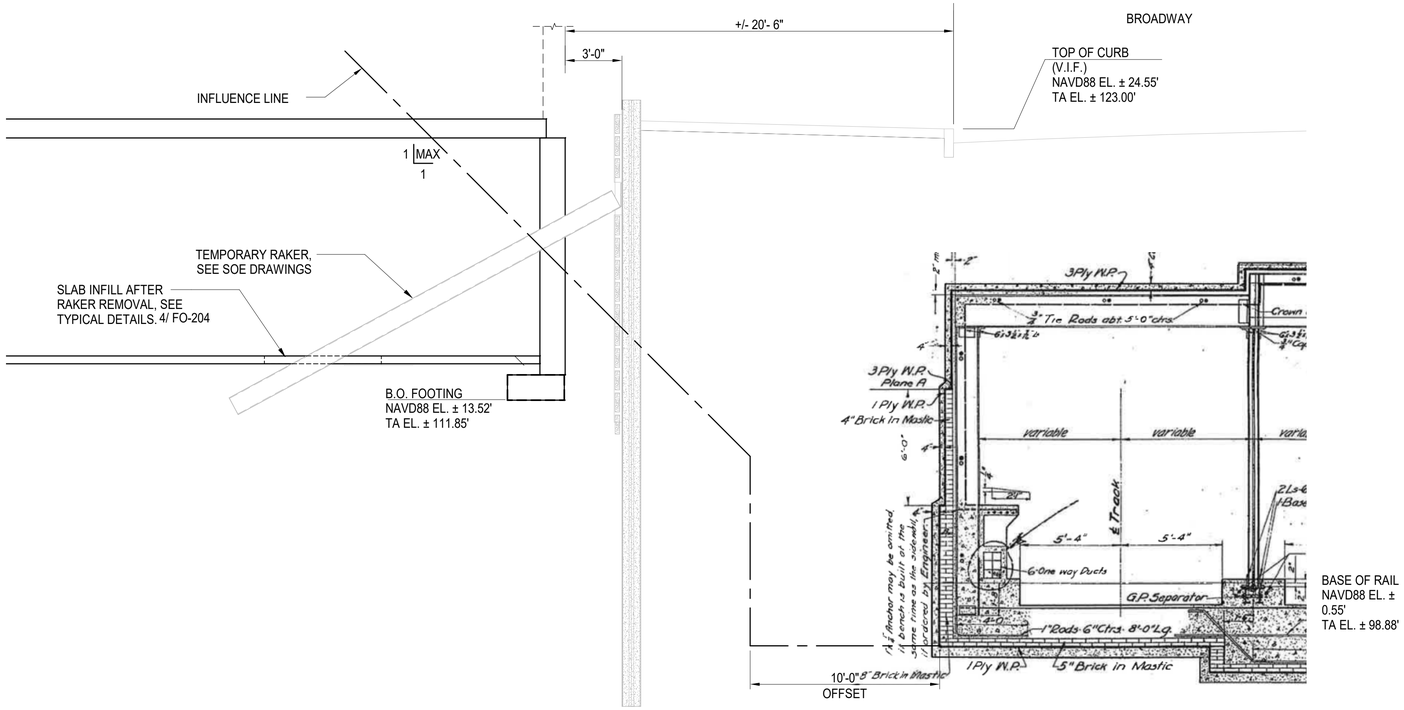

1 NYCTA EXISTING TUNNEL SECTIONS I

1/4" = 1'-0"

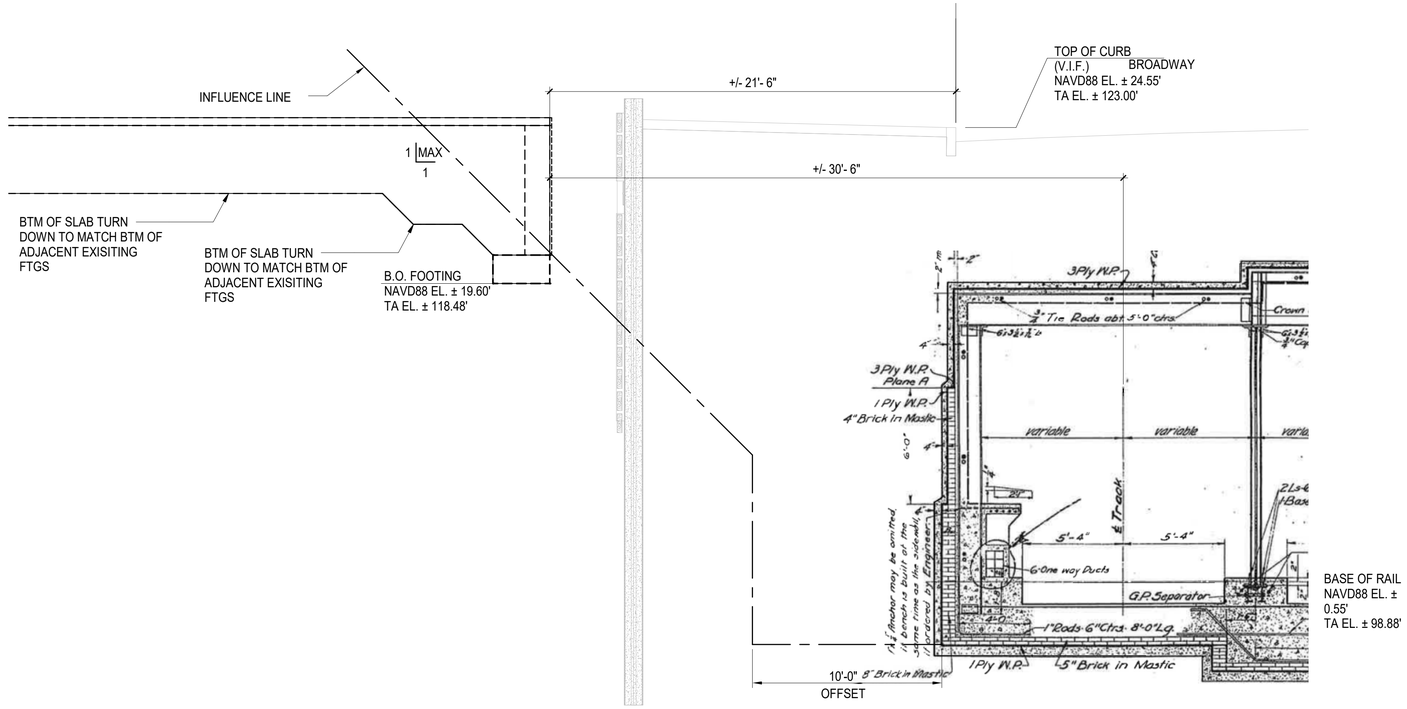

NOTE:
CONTRACTOR IS FULLY RESPONSIBLE FOR INVESTIGATING EXISTING UTILITIES AND T.A. STRUCTURES PRIOR TO COMMENCEMENT OF EXCAVATION/DRILLING.

2 NYCTA EXISTING TUNNEL SECTIONS II

SCALE: 1/4" = 1'-0"

Client:

RANGER PROPERTIES
4790 BROADWAY
NEW YORK, NY 10034

Architect / Engineer:

FOGARTY FINGER
architecture | interiors
69 Walker St, New York, NY 10013
t 212 966 7450 f 212 966 7444

Library Architect:

Andrew Berman Architect, PLLC
77 Chambers Street, 4th Floor
New York, NY 10007
Tel 212.226.5998

Structural:

Thornton Tomasetti
51 Madison Avenue
New York, NY 10010
Tel 917.661.7800

MEP / FP:

Concessi Engineering, PC
499 7th Avenue, 11th Floor South Tower
New York, NY 10018
Tel 212.629.6810

FACADE:

SIMPSON GUMPERTZ & HEGER
550 7th Avenue, 10th Floor
New York, NY 10018
Tel 212.271.7000

CODE:

METROPOLIS
22 Courtland Street, 10th Floor
New York, NY 10007
Tel 212.233.6344

No.	Date	Issue
2	DD ESTIMATING	02.06.2019
1	SCHEMATIC DESIGN	11.20.2018

Project:

4790 BROADWAY
NEW YORK, NY 10034

Drawing Title:

NYC TA SECTIONS I

Seal & Signature:

DATE (MM-DD-YY):	02/06/19
PROJECT No.:	N18168.00
DRAWING BY:	AP
CHK BY:	SB
DWG. No.:	FO-200.00
CADD FILE No.:	5 of 55

C:\Scratch\N18168.00_4790 BROADWAY_R19_CWard.rvt

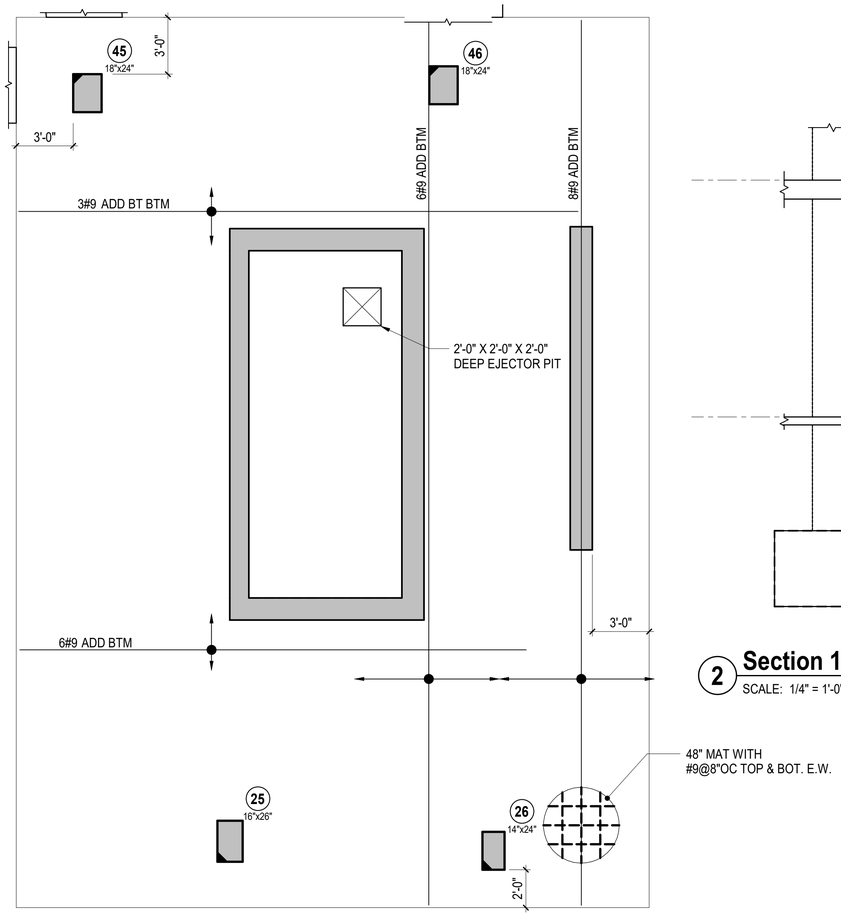

1 MAT FOUNDATION - SW2 THRU 5

SCALE: 1/4" = 1'-0"

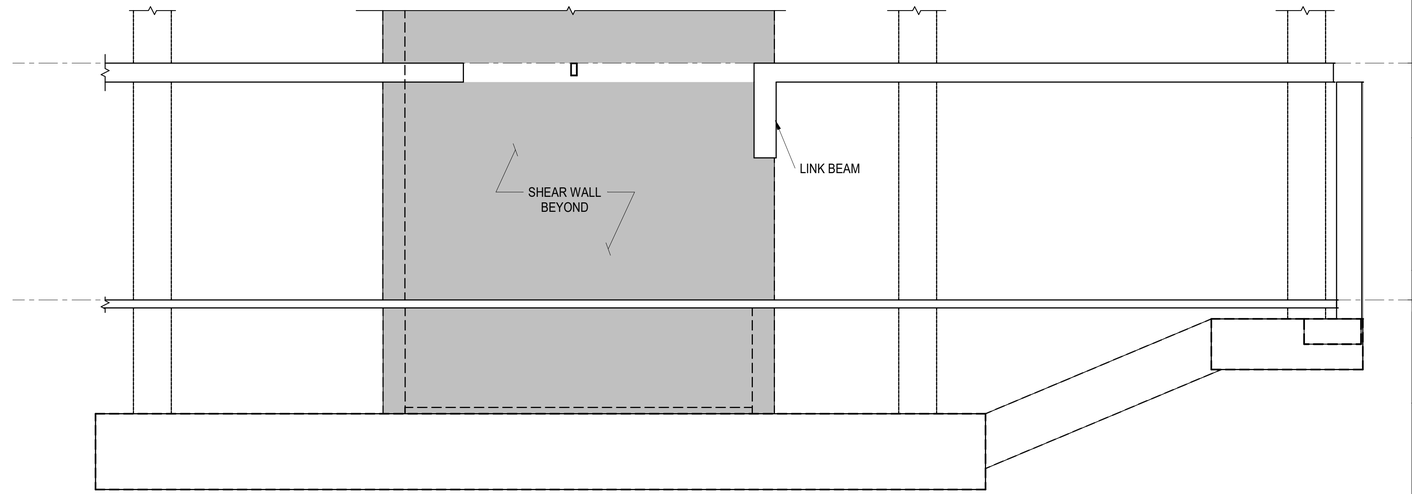

2 Section 15

SCALE: 1/4" = 1'-0"

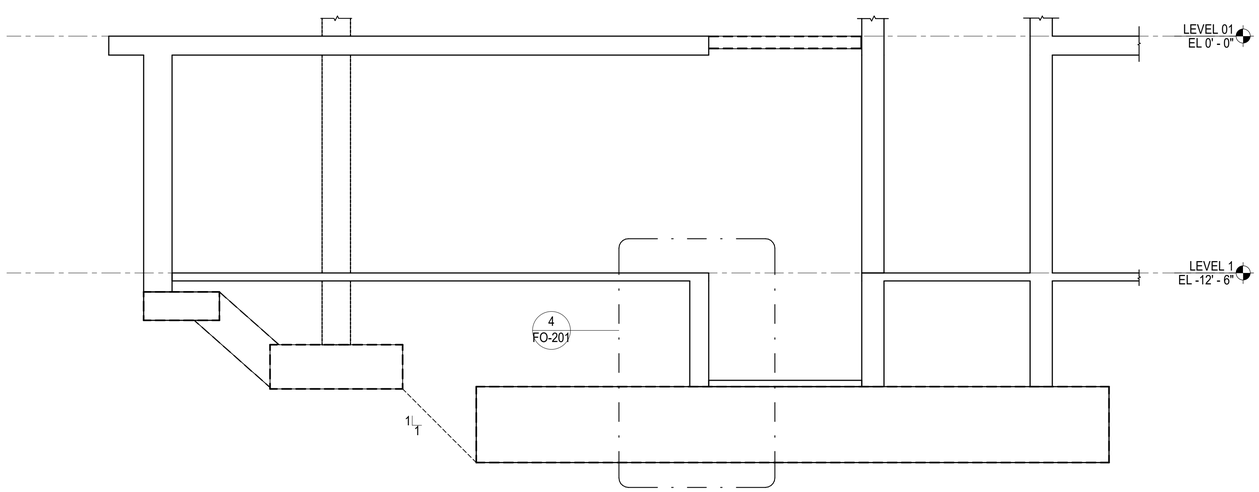

3 Section 16

SCALE: 1/4" = 1'-0"

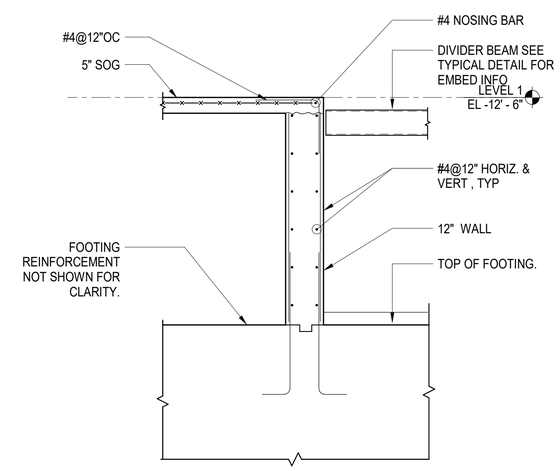

4 ELEVATOR PIT WALL

SCALE: 1/2" = 1'-0"

Client:

RANGER PROPERTIES
4790 BROADWAY
NEW YORK, NY 10034

Architect / Engineer:

FOGARTY FINGER
architecture | interiors
69 Walker St, New York, NY 10013
t 212 966 7450 f 212 966 7444

Library Architect:

Andrew Berman Architect, PLLC
77 Chambers Street, 4th Floor
New York, NY 10007
Tel 212.226.5998

Structural:

Thornton Tomasetti
51 Madison Avenue
New York, NY 10010
Tel 917.661.7800

MEP / FP:

Concessi Engineering, PC
499 7th Avenue, 11th Floor South Tower
New York, NY 10018
Tel 212.629.6810

FACADE:

SIMPSON GUMPERTZ & HEGER
550 7th Avenue, 10th Floor
New York, NY 10018
Tel 212.271.7000

CODE:

METROPOLIS
22 Courtland Street, 10th Floor
New York, NY 10007
Tel 212.233.6344

No.	Date	Issue
2	DD ESTIMATING	02.06.2019
1	SCHEMATIC DESIGN	11.20.2018

Project:

4790 BROADWAY
NEW YORK, NY 10034

Drawing Title:

FOUNDATION SECTIONS

Seal & Signature:

DATE (MM-DD-YY):	02/06/19
PROJECT No.:	N18168.00
DRAWING BY:	Author
CHK BY:	Checker
DWG. No.:	FO-201.00
CADD FILE No.:	6 of 55

C:\Scratch\N18168.00_4790 BROADWAY_R19_CWard.rvt

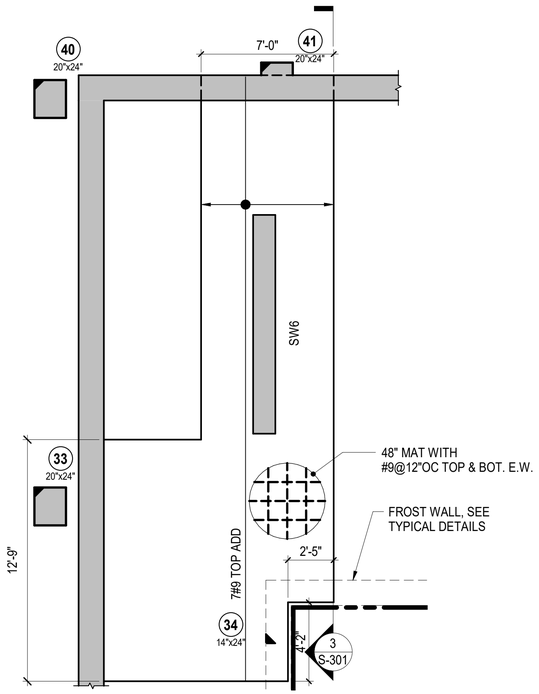

3 MAT FOUNDATION SW6

SCALE: 1/4" = 1'-0"

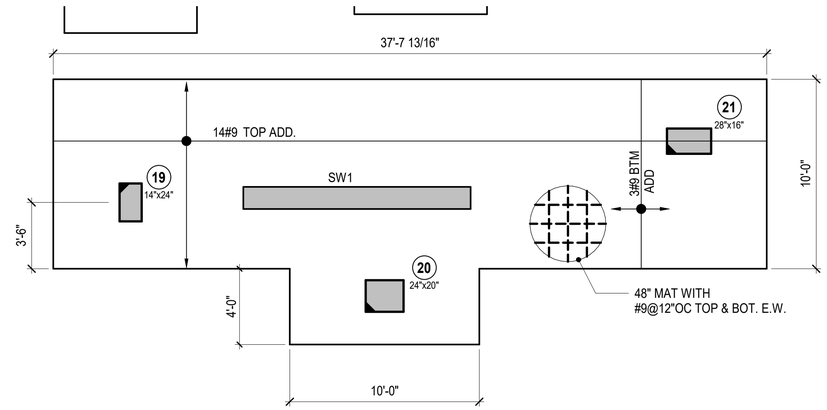

5 MAT FOUNDATION - SW1

SCALE: 1/4" = 1'-0"

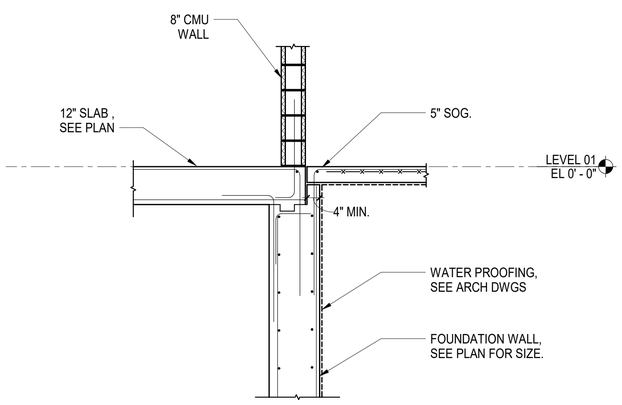

4 SECTION AT FIRST FLOOR

SCALE: 1/2" = 1'-0"

C:\Scratch\N18168.00_4790 BROADWAY_R19_CWard.rvt

Client:

RANGER PROPERTIES
4790 BROADWAY
NEW YORK, NY 10034

Architect / Engineer:

FOGARTY FINGER
architecture | interiors
69 Walker St, New York, NY 10013
t 212 966 7450 f 212 966 7444

Library Architect:

Andrew Berman Architect, PLLC
77 Chambers Street, 4th Floor
New York, NY 10007
Tel 212.226.5998

Structural:

Thornton Tomasetti
51 Madison Avenue
New York, NY 10010
Tel 917.661.7800

MEP / FP:

Concessi Engineering, PC
499 7th Avenue, 11th Floor South Tower
New York, NY 10018
Tel 212.629.6810

FACADE:

SIMPSON GUMPERTZ & HEGER
550 7th Avenue, 10th Floor
New York, NY 10018
Tel 212.271.7000

CODE:

METROPOLIS
22 Courtland Street, 10th Floor
New York, NY 10007
Tel 212.233.6344

No.	Date	Issue
2	DD ESTIMATING	02.06.2019
1	SCHEMATIC DESIGN	11.20.2018

Project:

4790 BROADWAY
NEW YORK, NY 10034

Drawing Title:

FOUNDATION SECTIONS

Seal & Signature:

DATE (MM-DD-YY):	02/06/19
PROJECT No.:	N18168.00
DRAWING BY:	Author
CHK BY:	Checker
DWG. No.:	FO-202.00
CADD FILE No.:	

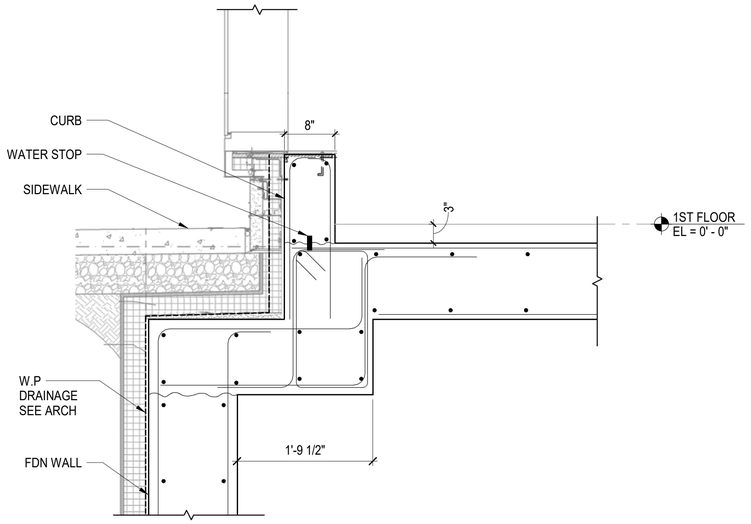

2 TYP. STOREFRONT WINDOW BASE

SCALE: 1" = 1'-0"

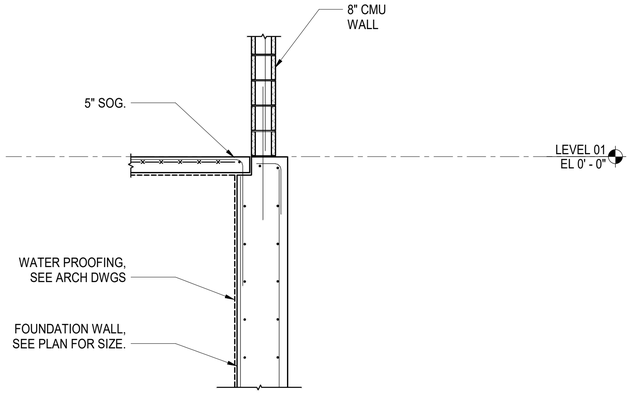

4 FOUNDATION WALL SECTION AT SOUTH STAIR

SCALE: 1/2" = 1'-0"

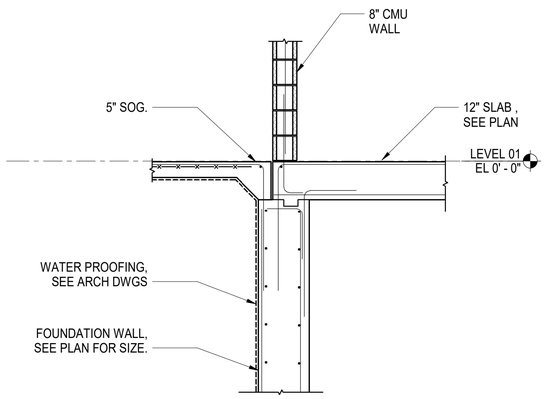

5 FOUNDATION WALL SECTION AT SOUTH OF RAMPS

SCALE: 1/2" = 1'-0"

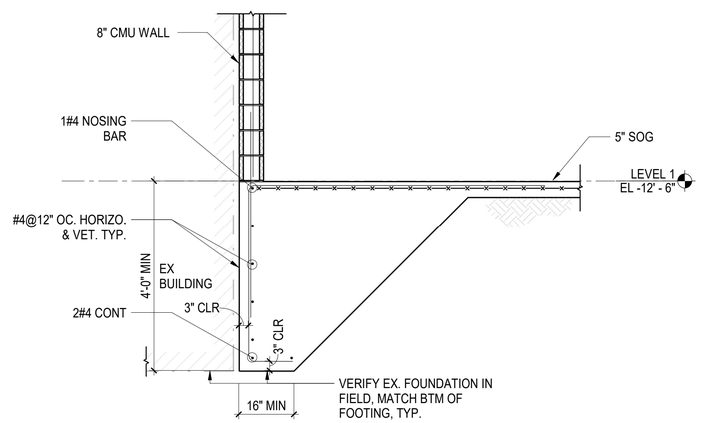

6 SLAB ON GRADE TURNDOWN @ ADJACENT BUILDING

SCALE: 1/2" = 1'-0"

Client:

RANGER PROPERTIES
4790 BROADWAY
NEW YORK, NY 10034

Architect / Engineer:

FOGARTY FINGER
architecture | interiors
69 Walker St, New York, NY 10013
t 212 966 7450 f 212 966 7444

Library Architect:

Andrew Berman Architect, PLLC
77 Chambers Street, 4th Floor
New York, NY 10007
Tel 212.226.5998

Structural:

Thornton Tomasetti
51 Madison Avenue
New York, NY 10010
Tel 917.661.7800

MEP / FP:

Concessi Engineering, PC
499 7th Avenue, 11th Floor South Tower
New York, NY 10018
Tel 212.629.6810

FACADE:

SIMPSON GUMPERTZ & HEGER
550 7th Avenue, 10th Floor
New York, NY 10018
Tel 212.271.7000

CODE:

METROPOLIS
22 Courtland Street, 10th Floor
New York, NY 10007
Tel 212.233.6344

No.	Date	Issue
2	DD ESTIMATING	02.06.2019
1	SCHEMATIC DESIGN	11.20.2018

Project:

4790 BROADWAY
NEW YORK, NY 10034

Drawing Title:

FOUNDATION SECTIONS

Seal & Signature:

DATE (MM-DD-YY): 01/31/19
PROJECT No.: N18168.00
DRAWING BY: Author
CHK BY: Checker
DWG. No.: FO-203.00
CADD FILE No.:

C:\Scratch\N18168.00_4790 BROADWAY_R19_sburnett.rvt

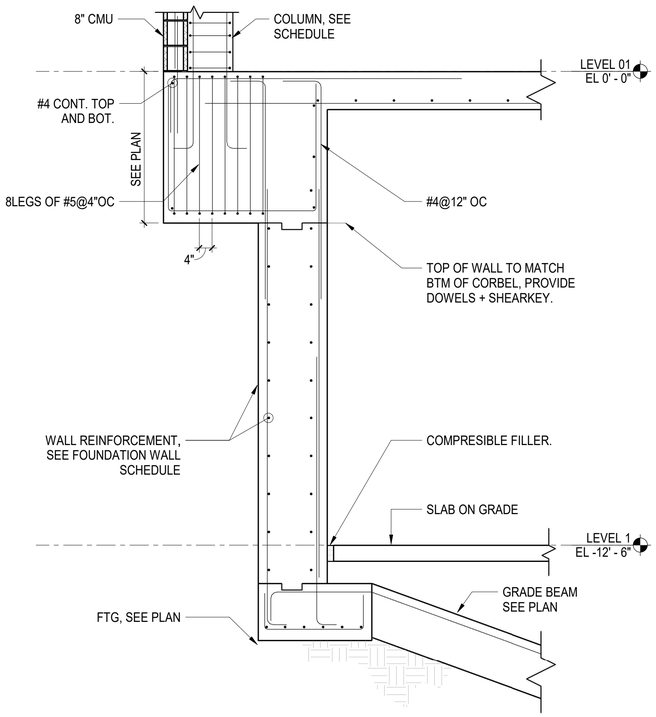

NOTES:

1. TOP OF FOUNDATION WALL TO MATCH BTM OF CORBEL.
2. PROVIDE SHEAR KEYS AND DOWELS.
3. SEE FO-100 FOR FOUNDATION WALL TYPE. REFER TO SCHEDULE FOR REINFORCEMENT.
4. SEE FO-100 FOR FTG INFORMATION.
5. SEE S-101 FOR SLAB REINFORCEMENT.
6. SEE ARCH DWGS FOR SLAB/ CORBEL EDGE.

1 WEST FOUNDATION WALL SECTION AT CORBEL

SCALE: 1/2" = 1'-0"

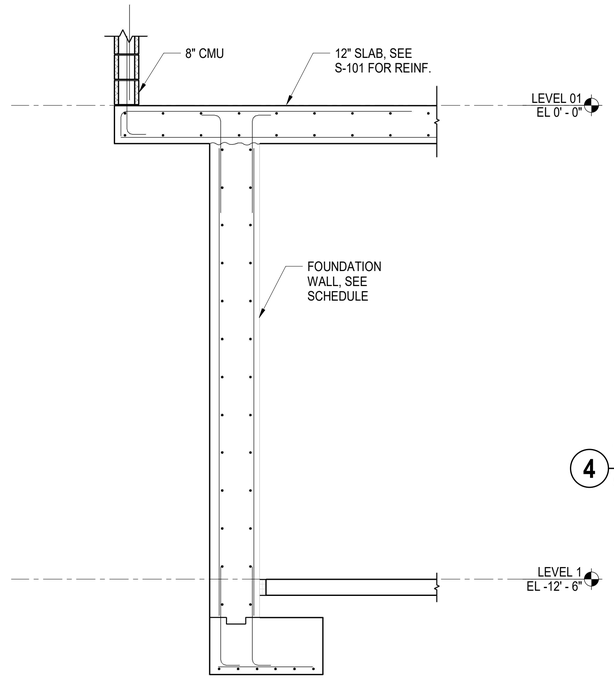

2 WEST FOUNDATION WALL SECTION

SCALE: 1/2" = 1'-0"

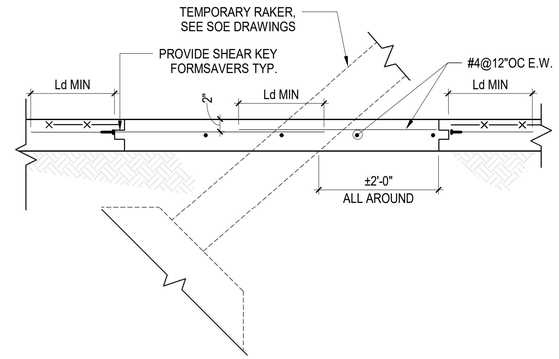

4 TYPICAL RAKER / SOG INFILL DETAL

SCALE: 1" = 1'-0"

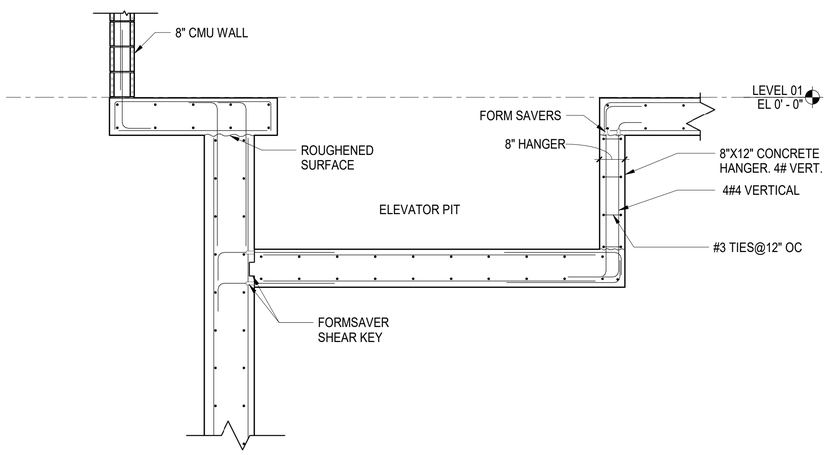

3 FOUNDATION WALL SECTION AT HUNG ELEVATOR PIT

SCALE: 1/2" = 1'-0"

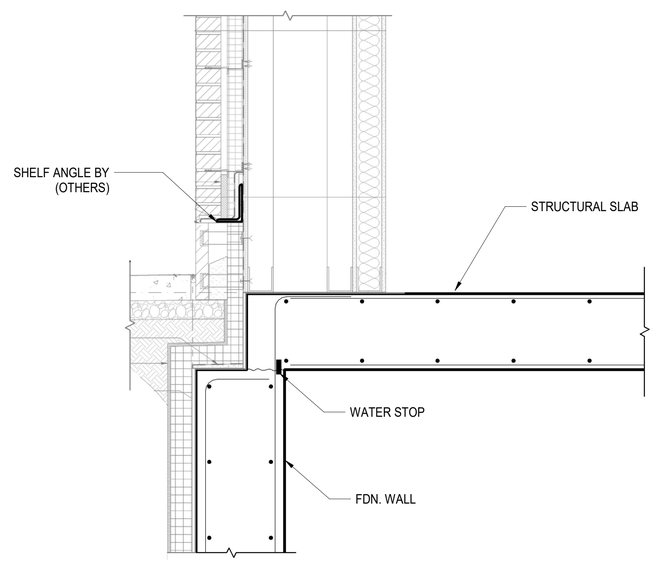

5 TYP. EXTERIOR WALL BRICK BASE

SCALE: 1" = 1'-0"

Client:

RANGER PROPERTIES
4790 BROADWAY
NEW YORK, NY 10034

Architect / Engineer:

FOGARTY FINGER architecture | interiors
69 Walker St, New York, NY 10013
t 212 966 7450 f 212 966 7444

Library Architect:

Andrew Berman Architect, PLLC
77 Chambers Street, 4th Floor
New York, NY 10007
Tel 212.226.5998

Structural:

Thornton Tomasetti
51 Madison Avenue
New York, NY 10010
Tel 917.661.7800

MEP / FP:

Concessi Engineering, PC
499 7th Avenue, 11th Floor South Tower
New York, NY 10018
Tel 212.629.6810

FACADE:

SIMPSON GUMPERTZ & HEGER
550 7th Avenue, 10th Floor
New York, NY 10018
Tel 212.271.7000

CODE:

METROPOLIS
22 Courtland Street, 10th Floor
New York, NY 10007
Tel 212.233.6344

No.	Date	Issue
2	DD ESTIMATING	02.06.2019
1	SCHEMATIC DESIGN	11.20.2018

Project:

4790 BROADWAY
NEW YORK, NY 10034

Drawing Title:

FOUNDATION SECTIONS

Seal & Signature:

DATE (MM-DD-YY): 01/31/19
PROJECT No.: N18168.00
DRAWING BY: Author
CHK BY: Checker
DWG. No.: FO-204.00
CADD FILE No.:

C:\Scratch\N18168.00_4790 BROADWAY_R19_ahummell.rvt

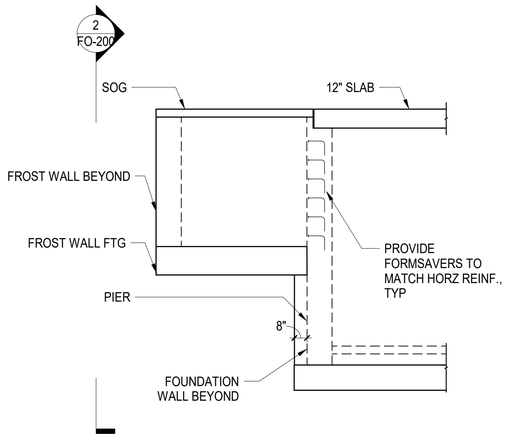

1 NORTH FOUNDATION WALL - PARTIAL ELEVATION

1/4" = 1'-0"

Client:

RANGER PROPERTIES
4790 BROADWAY
NEW YORK, NY 10034

Architect / Engineer:

FOGARTY FINGER
architecture | interiors

69 Walker St, New York, NY 10013
t 212 966 7450 f 212 966 7444

Library Architect:

Andrew Berman Architect, PLLC
77 Chambers Street, 4th Floor
New York, NY 10007
Tel 212.226.5998

Structural:

Thornton Tomasetti
51 Madison Avenue
New York, NY 10010
Tel 917.661.7800

MEP / FP:

Concessi Engineering, PC
499 7th Avenue, 11th Floor South Tower
New York, NY 10018
Tel 212.629.6810

FACADE:

SIMPSON GUMPERTZ & HEGER
550 7th Avenue, 10th Floor
New York, NY 10018
Tel 212.271.7000

CODE:

METROPOLIS
22 Courtland Street, 10th Floor
New York, NY 10007
Tel 212.233.6344

No.	Date	Issue
2	DD ESTIMATING	02.06.2019
1	SCHEMATIC DESIGN	11.20.2018

Project:

4790 BROADWAY
NEW YORK, NY 10034

Drawing Title:

FOUNDATION SECTIONS

Seal & Signature:

DATE (MM-DD-YY): 02/06/19
PROJECT No.: N18168.00
DRAWING BY: Author
CHK BY: Checker
DWG. No.:
FO-205.00
CADD FILE No.:

C:\Scratch\N18168.00_4790 BROADWAY_R19_CWard.rvt

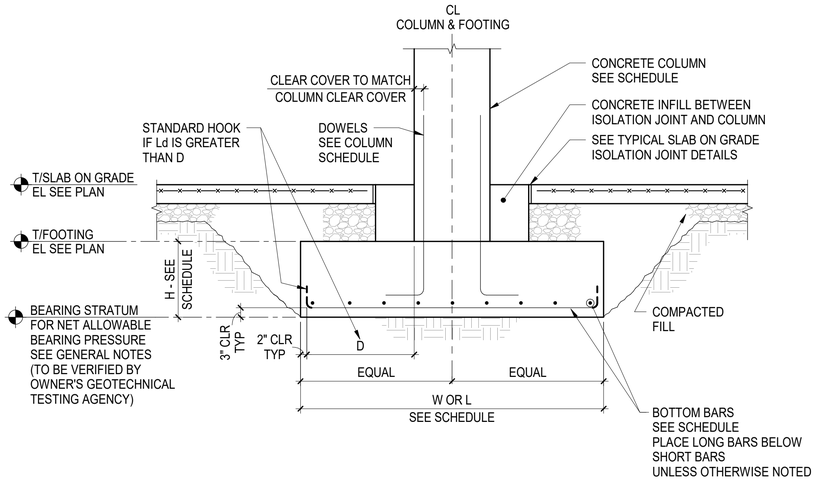

3 TYPICAL ISOLATED FOOTING - CONCRETE COLUMN

NOT TO SCALE

ISOLATED FOOTING SCHEDULE

F'C = 5000 PSI

MARK	WIDTH	LENGTH	THICKNESS	BOTTOM BARS	TOP BARS	REMARKS
F3	3' - 0"	3' - 0"	1' - 0"			
F3.5	3' - 6"	3' - 6"	1' - 0"	4-#7 EA WAY		HOOK BARS
F4	4' - 0"	4' - 0"	1' - 4"	4-#7 EA WAY		HOOK BARS
F4.5	4' - 6"	4' - 6"	1' - 4"	5-#7 EA WAY		HOOK BARS
F5	5' - 0"	5' - 0"	1' - 8"	6-#7 EA WAY		HOOK BARS
F6	6' - 0"	6' - 0"	2' - 0"	8-#7 EA WAY		HOOK BARS
F7	7' - 0"	7' - 0"	2' - 4"			HOOK BARS
F8	8' - 0"	8' - 0"	2' - 8"	9-#9 EA WAY		HOOK BARS
F9	9' - 0"	9' - 0"	3' - 0"	12-#9 EA WAY		HOOK BARS
F10	10' - 0"	10' - 0"	3' - 0"	17-#9 EA WAY		HOOK BARS

NOTE:

1. REINFORCEMENT SHALL NOT BE SPLICED WITHOUT PRIOR WRITTEN APPROVAL FROM SER.

4 ISOLATED FOOTING SCHEDULE

NOT TO SCALE

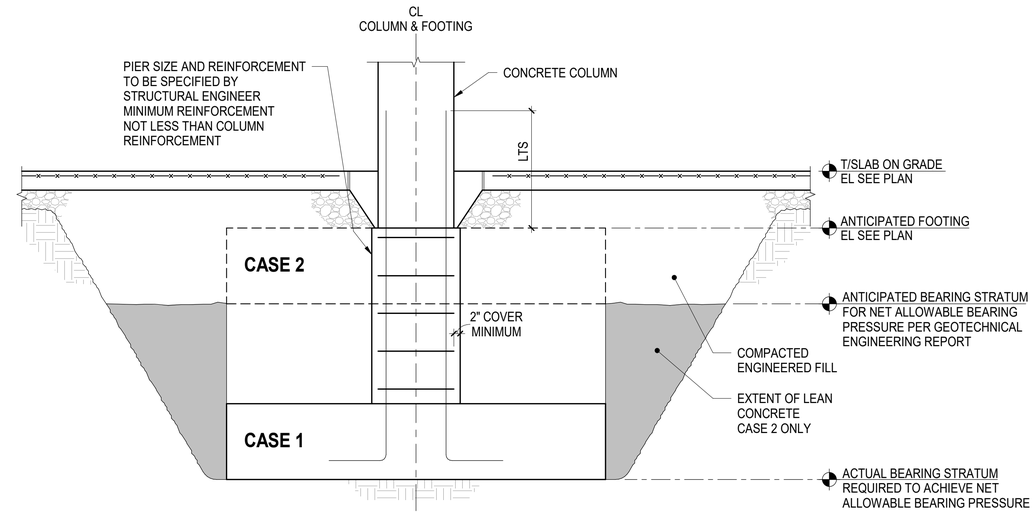

NOTES:

1. THIS DETAIL SHALL NOT BE USED WITHOUT PRIOR WRITTEN APPROVAL FROM THE SER.
2. THESE FOOTING INSTALLATION PROCEDURES ARE TO BE FOLLOWED IN THE EVENT THAT ANTICIPATED NET ALLOWABLE BEARING PRESSURE CANNOT BE OBTAINED AT THE ANTICIPATED STRATUM.

   CASE 1:

   PLACE FOOTING AT ACTUAL BEARING STRATUM. INSTALL PIER TO ANTICIPATED TOP OF FOOTING ELEVATION.

   CASE 2:

   AT CONTRACTOR'S OPTION, POUR LEAN CONCRETE (F'c=2000 PSI) TO THE ANTICIPATED BOTTOM OF FOOTING ELEVATION AND CAST FOOTING ON TOP OF LEAN CONCRETE.
3. SEE TYPICAL ISOLATED FOOTING DETAILS FOR ADDITIONAL INFORMATION.

5 TYPICAL FOOTING DETAIL WHERE OVER-EXCAVATION IS REQUIRED DUE TO UNANTICIPATED SOIL CONDITIONS - CONCRETE COLUMN

NOT TO SCALE

Client:

RANGER PROPERTIES
4790 BROADWAY
NEW YORK, NY 10034

Architect / Engineer:

FOGARTY FINGER
architecture | interiors
69 Walker St, New York, NY 10013
t 212 966 7450 f 212 966 7444

Library Architect:

Andrew Berman Architect, PLLC
77 Chambers Street, 4th Floor
New York, NY 10007
Tel 212.226.5998

Structural:

Thornton Tomasetti
51 Madison Avenue
New York, NY 10010
Tel 917.661.7800

MEP / FP:

Concessi Engineering, PC
499 7th Avenue, 11th Floor South Tower
New York, NY 10018
Tel 212.629.6810

FACADE:

SIMPSON GUMPERTZ & HEGER
550 7th Avenue, 10th Floor
New York, NY 10018
Tel 212.271.7000

CODE:

METROPOLIS
22 Courtland Street, 10th Floor
New York, NY 10007
Tel 212.233.6344

No.	Date	Issue
2	DD ESTIMATING	02.06.2019
1	SCHEMATIC DESIGN	11.20.2018

Project:

4790 BROADWAY
NEW YORK, NY 10034

Drawing Title:

TYPICAL FOOTING
DETAILS AND SCHEDULE

Seal & Signature:

DATE (MM-DD-YY): 02/06/19
PROJECT No.: N18168.00
DRAWING BY: AP
CHK BY: SB
DWG. No.: FO-300.00
CADD FILE No.:

C:\Sorati\N18168.00_4790 BROADWAY_R19_CV.rvt

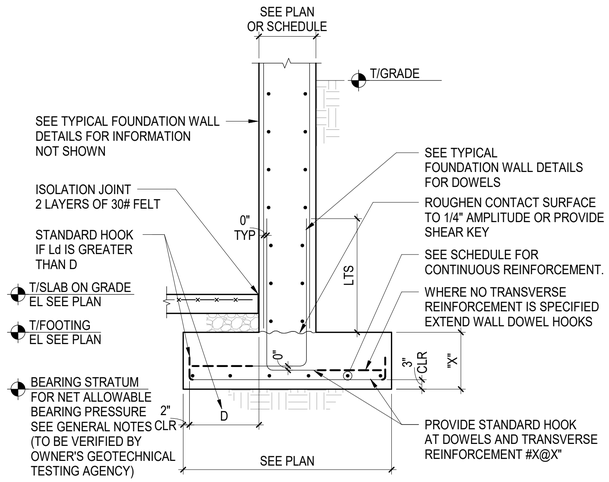

3 TYPICAL CONTINUOUS FOOTING AT FOUNDATION WALL

SCALE: NOT TO SCALE

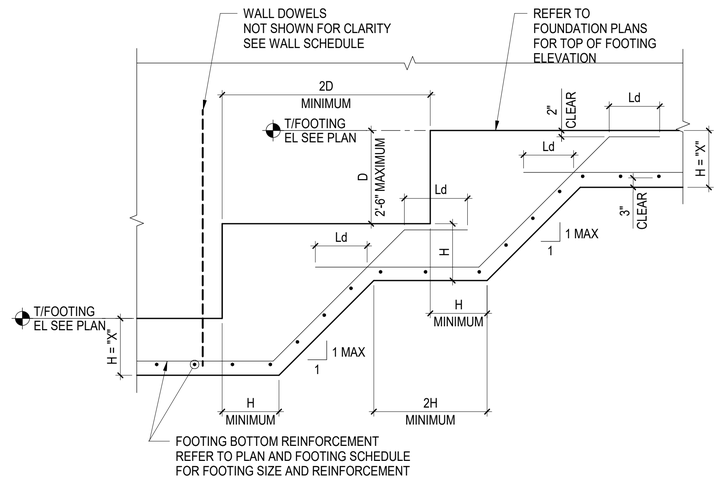

4 TYPICAL STEPPED WALL FOOTING DETAIL

SCALE: NOT TO SCALE

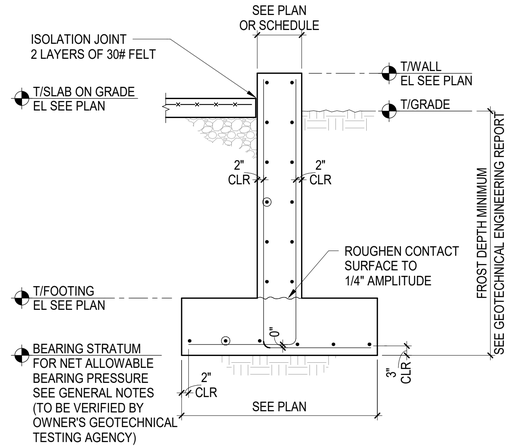

1 TYPICAL CONTINUOUS FOOTING AT FROST WALL

NOT TO SCALE

FOUNDATION WALL SCHEDULE

MARK	CONCRETE STRENGTH f'c (PSI)	LEVEL X	T WALL THICKNESS (INCH)	CLEAR COVER (INCH)	OUTSIDE BARS	INSIDE BARS	HORIZONTAL CONTINUOUS BARS	REMARKS
FW1	5000		16	1" IF / 2" OF	#4@12"	#7 @12" OC	#4@12"	
FW2	5000		18	1" IF / 2" OF	#4@12"	#7 @12" OC	#4@12"	
FW3	5000		22	1" IF / 2" OF	#4@12"	#7 @12" OC	#4@12"	

NOTES: SEE FO-100 FOR ADDITIONAL REINFORCEMENT REQUIREMENTS.

2 FOUNDATION WALL SCHEDULE

SCALE: NOT TO SCALE

Client:

RANGER PROPERTIES
4790 BROADWAY
NEW YORK, NY 10034

Architect / Engineer:

FOGARTY FINGER
architecture | interiors
69 Walker St, New York, NY 10013
t 212 966 7450 f 212 966 7444

Library Architect:

Andrew Berman Architect, PLLC
77 Chambers Street, 4th Floor
New York, NY 10007
Tel 212.226.5998

Structural:

Thornton Tomasetti
51 Madison Avenue
New York, NY 10010
Tel 917.661.7800

MEP / FP:

Concessi Engineering, PC
499 7th Avenue, 11th Floor South Tower
New York, NY 10018
Tel 212.629.6810

FACADE:

SIMPSON GUMPERTZ & HEGER
550 7th Avenue, 10th Floor
New York, NY 10018
Tel 212.271.7000

CODE:

METROPOLIS
22 Courtland Street, 10th Floor
New York, NY 10007
Tel 212.233.6344

No.	Date	Issue
2	DD ESTIMATING	02.06.2019
1	SCHEMATIC DESIGN	11.20.2018

Project:

4790 BROADWAY
NEW YORK, NY 10034

Drawing Title:

TYPICAL COMBINED FOOTING DETAILS AND SCHEDULE

Seal & Signature:

DATE (MM-DD-YY): 02/06/19
PROJECT No.: N18168.00
DRAWING BY: AP
CHK BY: SB
DWG. No.: FO-301.00
CADD FILE No.:

C:\Sites\N18168.00_4790 BROADWAY_R19_CV.rvt

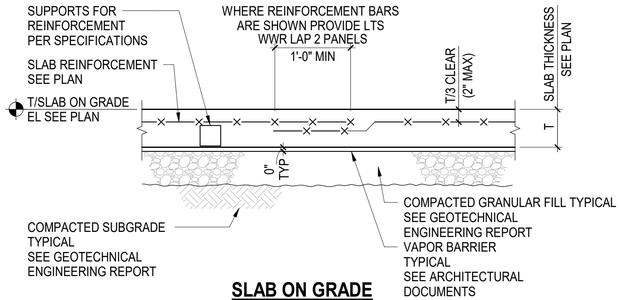

SLAB ON GRADE

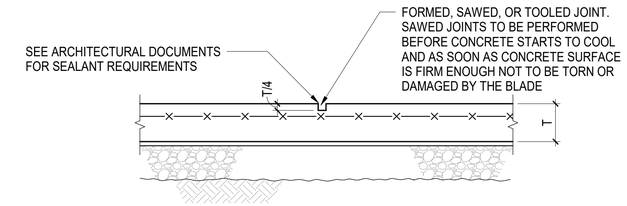

CONTRACTION JOINT

NOTE:

1. WHERE NOT INDICATED ON DRAWINGS PROVIDE JOINTS AT COLUMN CENTERLINES AND BETWEEN COLUMN CENTERLINES WITH SPACING OF JOINTS NOT TO EXCEED 36 TIMES THE SLAB THICKNESS (T-INCHES)

1 TYPICAL SLAB ON GRADE DETAILS

NOT TO SCALE

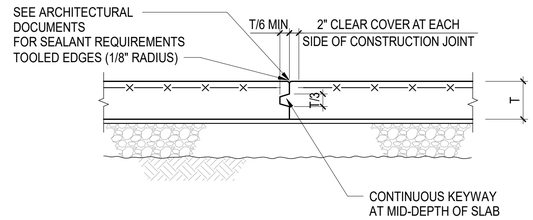

CONSTRUCTION JOINT/CONTRACTION JOINT

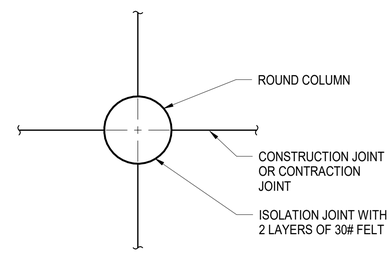

ROUND COLUMN

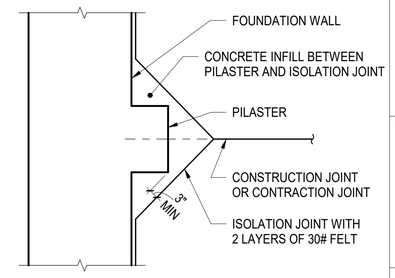

PILASTER

NOTES:

1. SEE TYPICAL SLAB ON GRADE DETAILS FOR JOINT SPACING REQUIREMENTS
2. CONCRETE INFILL BETWEEN COLUMN AND ISOLATION JOINT TO BE POURED AFTER ALL THE SLABS SUPPORTED BY THE COLUMN HAVE BEEN POURED

2 TYPICAL ISOLATION JOINT DETAILS AT SLAB ON GRADE

NOT TO SCALE

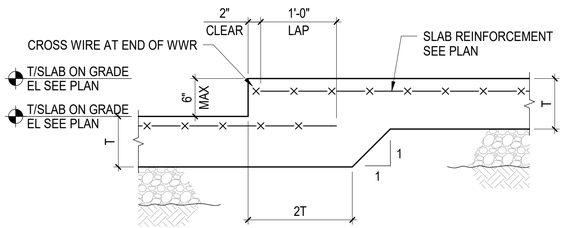

NOTE:

1. SEE TYPICAL SLAB ON GRADE DETAILS FOR ADDITIONAL INFORMATION

3 TYPICAL SLAB ON GRADE STEP 6" MAXIMUM

NOT TO SCALE

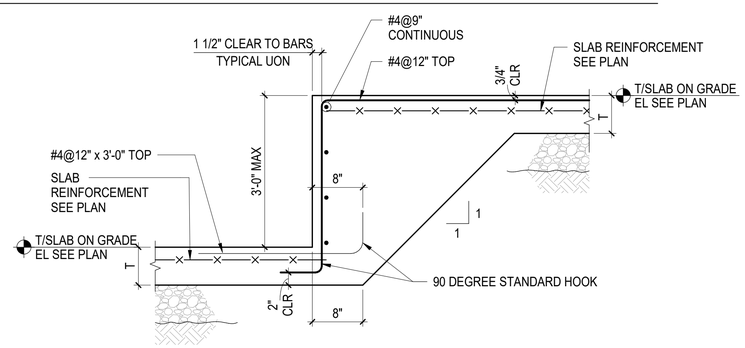

NOTE:

1. SEE TYPICAL SLAB ON GRADE DETAILS FOR ADDITIONAL INFORMATION

4 TYPICAL SLAB ON GRADE STEP OVER 6" TO 3'-0"

NOT TO SCALE

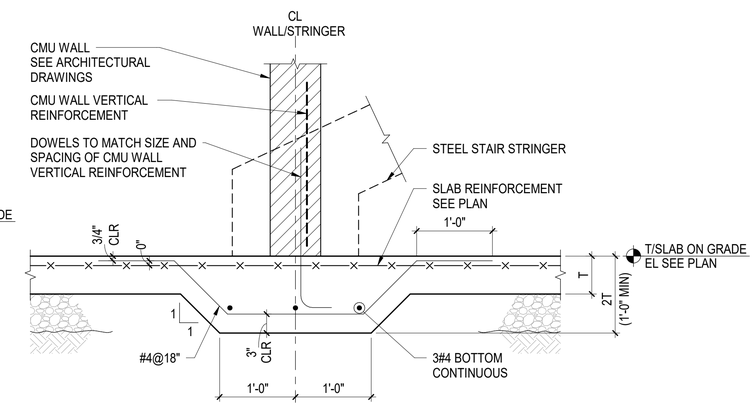

NOTES:

1. SEE ARCHITECTURAL DRAWINGS FOR LOCATIONS OF WALLS AND STAIRS
2. SEE TYPICAL SLAB ON GRADE DETAILS FOR MORE INFORMATION

5 TYPICAL THICKENED SLAB ON GRADE AT NON-BEARING CMU WALL OR STAIR STRINGER

NOT TO SCALE

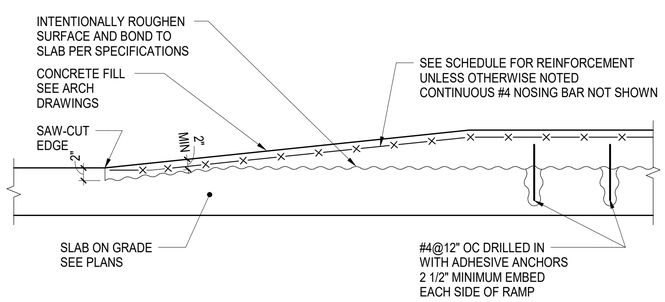

DETAIL AT RAMP

NOTE:

1. THIS DETAIL IS NOT APPLICABLE TO GENERAL RAISED SLAB AREA HIGHER THAN 4" OTHER THAN MECHANICAL PADS AND HOUSEKEEPING PADS

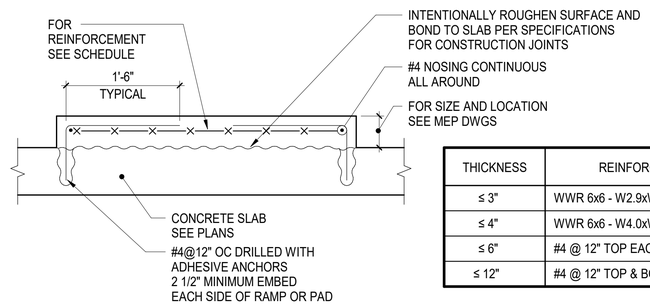

SECTION AT RAMP OR PAD

THICKNESS	REINFORCEMENT
≤ 3"	WWR 6x6 - W2.9xW2.9
≤ 4"	WWR 6x6 - W4.0xW4.0
≤ 6"	#4 @ 12" TOP EACH WAY
≤ 12"	#4 @ 12" TOP & BOTTOM EACH WAY

6 TYPICAL DETAIL OF CONCRETE FILL HOUSEKEEPING PAD / MECHANICAL PAD / RAMP

NOT TO SCALE

Client:

RANGER PROPERTIES
4790 BROADWAY
NEW YORK, NY 10034

Architect / Engineer:

FOGARTY FINGER architecture | interiors
69 Walker St, New York, NY 10013
t 212 966 7450 f 212 966 7444

Library Architect:

Andrew Berman Architect, PLLC
77 Chambers Street, 4th Floor
New York, NY 10007
Tel 212.226.5998

Structural:

Thornton Tomasetti
51 Madison Avenue
New York, NY 10010
Tel 917.661.7800

MEP / FP:

Concessi Engineering, PC
499 7th Avenue, 11th Floor South Tower
New York, NY 10018
Tel 212.629.6810

FACADE:

SIMPSON GUMPERTZ & HEGER
550 7th Avenue, 10th Floor
New York, NY 10018
Tel 212.271.7000

CODE:

METROPOLIS
22 Courtland Street, 10th Floor
New York, NY 10007
Tel 212.233.6344

No.	Date	Issue
2	DD ESTIMATING	02.06.2019
1	SCHEMATIC DESIGN	11.20.2018

Project:

4790 BROADWAY
NEW YORK, NY 10034

Drawing Title:

TYPICAL SLAB ON GRADE DETAILS-I

Seal & Signature:

DATE (MM-DD-YY): 02/06/19
PROJECT No.: N18168.00
DRAWING BY: AP
CHK BY: SB
DWG. No.: FO-302.00
CADD FILE No.:

C:\Scratch\N18168.00_4790_BROADWAY_R19_CWard.rvt

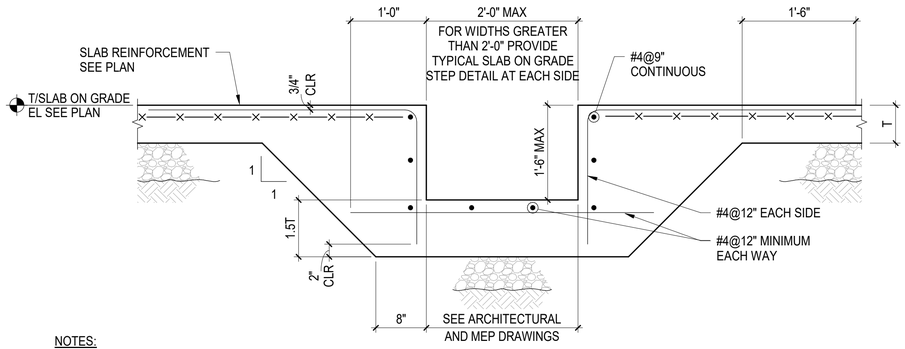

NOTES:

1. COORDINATE WITH ARCHITECTURE AND MEP DRAWINGS FOR ADDITIONAL INFORMATION AND EMBEDMENTS
2. SEE TYPICAL SLAB ON GRADE DETAILS FOR ADDITIONAL INFORMATION

1 TYPICAL TRENCH AT SLAB ON GRADE

NOT TO SCALE

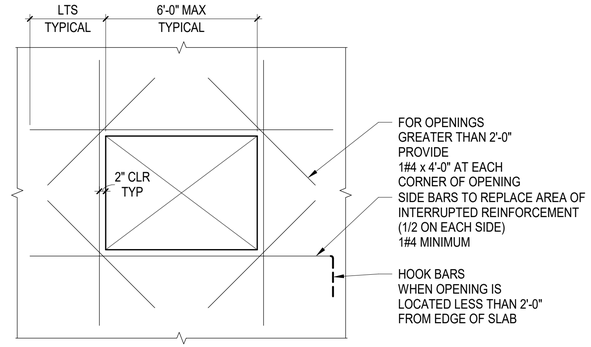

PLAN

NOTES:

1. FOR SIZE OF OPENINGS SEE ARCHITECTURAL DRAWINGS
2. ADDITIONAL REINFORCEMENT IS NOT REQUIRED AT OPENINGS THAT DO NOT INTERRUPT THE TYPICAL REINFORCEMENT

2 TYPICAL SLAB ON GRADE DETAIL OF ADDITIONAL REINFORCEMENT AT ANY OPENINGS OR AT STEP GREATER THAN 6" UP TO 3'-0"

NOT TO SCALE

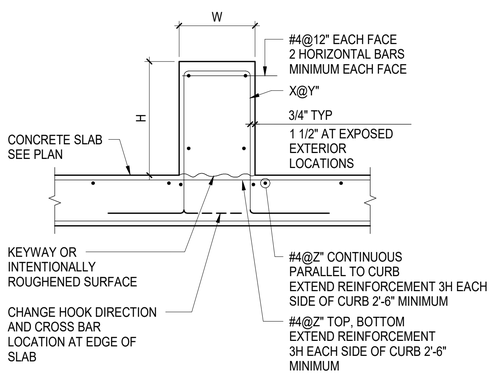

CURB WIDTH OVER 8"

CURB DIMENSION AND REINFORCEMENT SCHEDULE			
W	H	X@Y"	Z"

NOTES:

1. FOR SIZE AND LOCATION SEE ARCHITECTURE, MEP, OR STRUCTURAL DRAWINGS
2. ROUGHEN SURFACE OF SLAB TO 1/4" AMPLITUDE CLEAN THOROUGHLY AND APPLY BONDING AGENT IMMEDIATELY BEFORE CASTING CURB
3. THIS DETAIL IS APPLICABLE TO CURBS SUPPORTING EXTERIOR WALLS SEE ADDITIONAL DETAILS FOR CURTAIN WALL SUPPORT SEE ARCH DRAWINGS FOR EMBEDDED PLATES AND BLOCKOUTS
4. SEE ARCH DRAWINGS FOR EMBEDDED PLATES AND BLOCKOUTS REPLACE REINFORCEMENT INTERRUPTED BY BLOCKOUTS
5. AT CONTRACTORS OPTION DRILLED-IN DOWELS WITH ADHESIVE ANCHORS MAY BE PERMITTED BAR SIZE AND SPACING MAY CHANGE DEPENDING ON EMBEDMENT REQUIRED CONTRACTOR TO VERIFY WITH SER

3 TYPICAL CURB DETAIL (AT EXTERIOR)

NOT TO SCALE

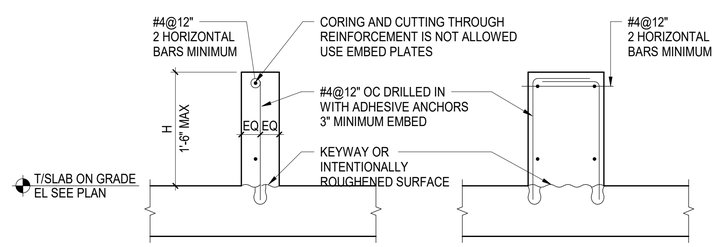

CURB WIDTH - 4" MINIMUM TO 7" MAX **CURB WIDTH OVER 7"**

NOTES:

1. FOR SIZE AND LOCATION SEE ARCHITECTURE, MEP, OR STRUCTURAL DRAWINGS
2. ROUGHEN SURFACE OF SLAB TO 1/4" AMPLITUDE CLEAN THOROUGHLY AND APPLY BONDING AGENT IMMEDIATELY BEFORE CASTING CURB
3. THIS DETAIL IS APPLICABLE AT CURBS FOR NON-STRUCTURAL ELEMENTS SUCH AS SKYLIGHTS, INTERIOR PARTITIONS AND INTERIOR RAILINGS
4. SEE ARCH DRAWINGS FOR EMBEDDED PLATES AND BLOCKOUTS REPLACE REINFORCEMENT INTERRUPTED BY BLOCKOUTS

4 TYPICAL CURB DETAILS (AT INTERIOR)

NOT TO SCALE

Client:

RANGER PROPERTIES
4790 BROADWAY
NEW YORK, NY 10034

Architect / Engineer:

FOGARTY FINGER architecture | interiors
69 Walker St, New York, NY 10013
t 212 966 7450 f 212 966 7444

Library Architect:

Andrew Berman Architect, PLLC
77 Chambers Street, 4th Floor
New York, NY 10007
Tel 212.226.5998

Structural:

Thornton Tomasetti
51 Madison Avenue
New York, NY 10010
Tel 917.661.7800

MEP / FP:

Concessi Engineering, PC
499 7th Avenue, 11th Floor South Tower
New York, NY 10018
Tel 212.629.6810

FACADE:

SIMPSON GUMPERTZ & HEGER
550 7th Avenue, 10th Floor
New York, NY 10018
Tel 212.271.7000

CODE:

METROPOLIS
22 Courtland Street, 10th Floor
New York, NY 10007
Tel 212.233.6344

No.	Date	Issue
2	DD ESTIMATING	02.06.2019
1	SCHEMATIC DESIGN	11.20.2018

Project:

4790 BROADWAY
NEW YORK, NY 10034

Drawing Title:

TYPICAL SLAB ON GRADE DETAILS-II

Seal & Signature:

DATE (MM-DD-YY): 02/06/19
PROJECT No.: N18168.00
DRAWING BY: Author
CHK. BY: Checker
DWG. No.: FO-303.00
CADD FILE No.:

C:\Sites\N18168.00_4790 BROADWAY_R19_DWest.rvt

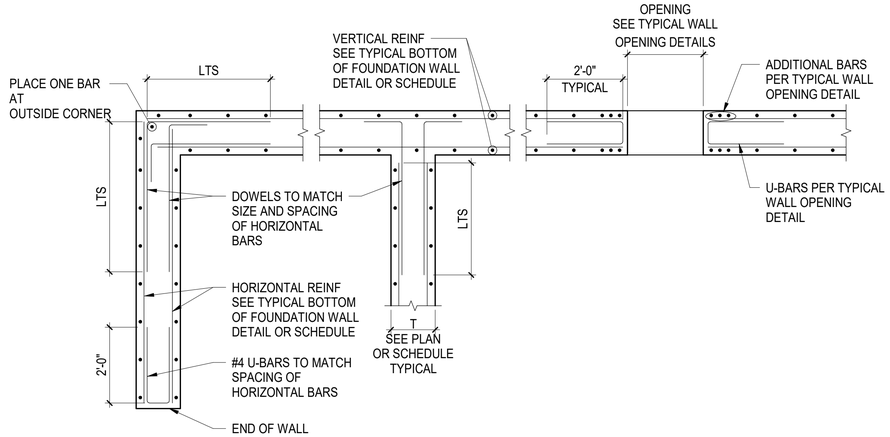

1 TYPICAL FOUNDATION WALL DETAIL - PLAN

NOT TO SCALE

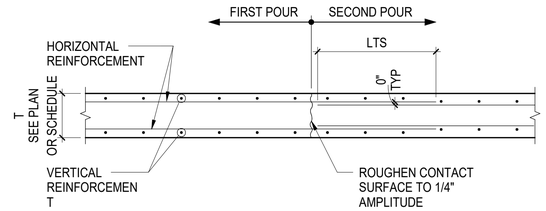

NOTES:

1. SEE ARCHITECTURAL DOCUMENTS FOR WATERSTOP REQUIREMENTS
2. SEE GENERAL NOTES FOR CONSTRUCTION JOINT MAXIMUM SPACING

2 TYPICAL VERTICAL CONSTRUCTION JOINT IN CONCRETE WALL

NOT TO SCALE

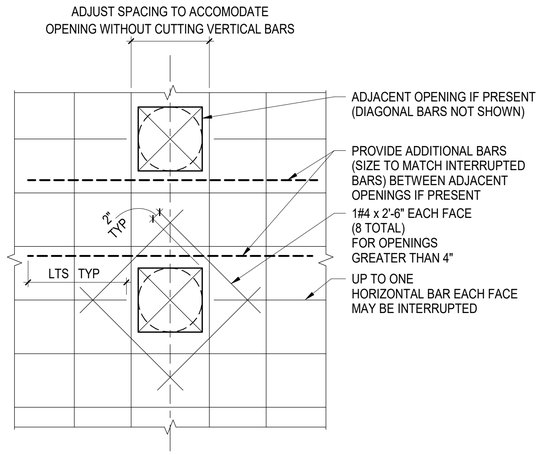

OPENING LESS THAN 10"

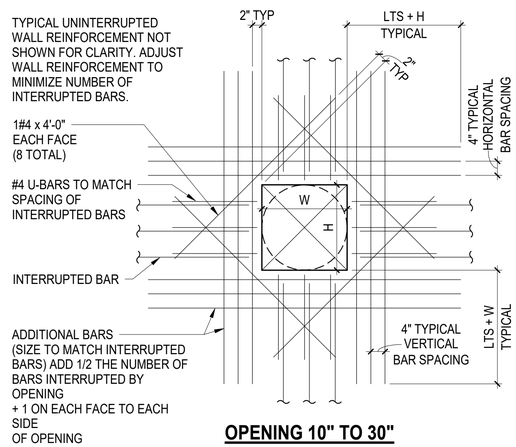

OPENING 10" TO 30"

NOTES:

1. MINIMUM CLEAR DISTANCE BETWEEN OPENINGS IS 2 TIMES MAXIMUM OPENING SIZE
2. FOR OPENINGS NOT SHOWN ON STRUCTURAL DRAWINGS, CONTRACTOR TO SUBMIT LOCATIONS AND SPACING TO STRUCTURAL ENGINEER FOR WRITTEN APPROVAL

3 TYPICAL WALL OPENING DETAILS

NOT TO SCALE

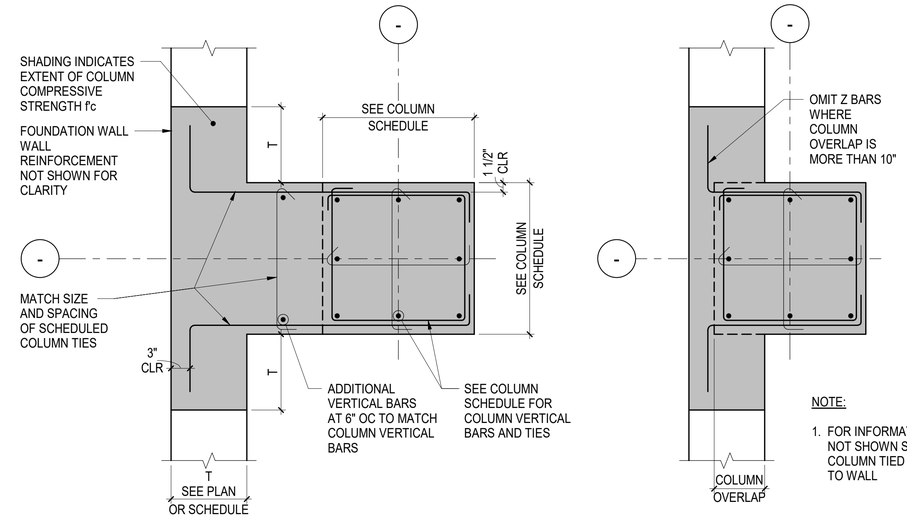

COLUMN TIED TO WALL

COLUMN OVERLAPS WALL

NOTE:

1. FOR INFORMATION NOT SHOWN SEE COLUMN TIED TO WALL

6 COLUMN OR PIER AT FOUNDATION WALL

NOT TO SCALE

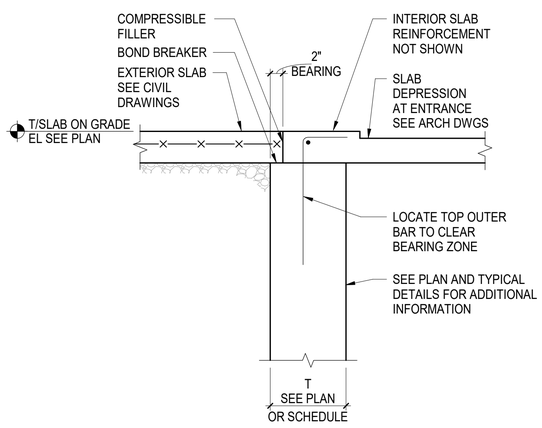

7 TYPICAL SECTION AT ENTRANCE

NOT TO SCALE

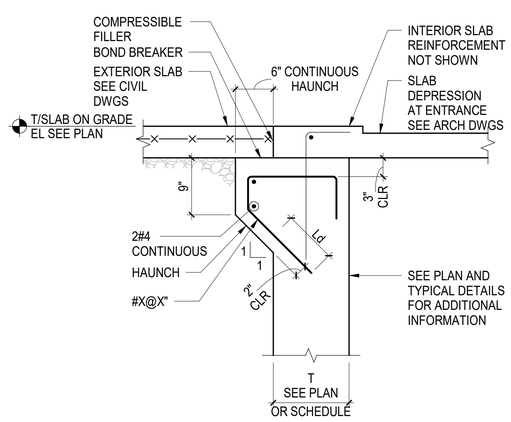

8 TYPICAL SECTION AT ENTRANCE WITH HAUNCH

NOT TO SCALE

Client:

RANGER PROPERTIES
4790 BROADWAY
NEW YORK, NY 10034

Architect / Engineer:

FOGARTY FINGER architecture | interiors
69 Walker St, New York, NY 10013
t 212 966 7450 f 212 966 7444

Library Architect:

Andrew Berman Architect, PLLC
77 Chambers Street, 4th Floor
New York, NY 10007
Tel 212.226.5998

Structural:

Thornton Tomasetti
51 Madison Avenue
New York, NY 10010
Tel 917.661.7800

MEP / FP:

Concessi Engineering, PC
499 7th Avenue, 11th Floor South Tower
New York, NY 10018
Tel 212.629.6810

FACADE:

SIMPSON GUMPERTZ & HEGER
550 7th Avenue, 10th Floor
New York, NY 10018
Tel 212.271.7000

CODE:

METROPOLIS
22 Courtland Street, 10th Floor
New York, NY 10007
Tel 212.233.6344

No.	Date	Issue
2	DD ESTIMATING	02.06.2019
1	SCHEMATIC DESIGN	11.20.2018

Project:

4790 BROADWAY
NEW YORK, NY 10034

Drawing Title:

TYPICAL FOUNDATION WALL DETAILS

Seal & Signature:

DATE (MM-DD-YY): 02/06/19
PROJECT No.: N18168.00
DRAWING BY: AP
CHK BY: SB
DWG. No.: FO-304.00
CADD FILE No.:

C:\Scratch\N18168.00_4790 BROADWAY_R19_CWest.rvt

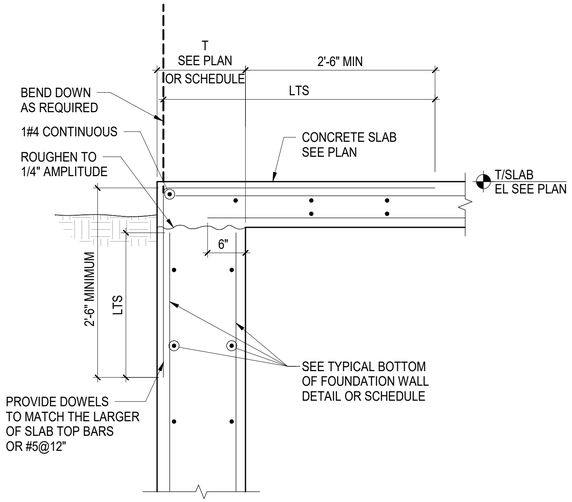

1 TYPICAL TOP OF FOUNDATION WALL WITH CONCRETE SLAB

NOT TO SCALE

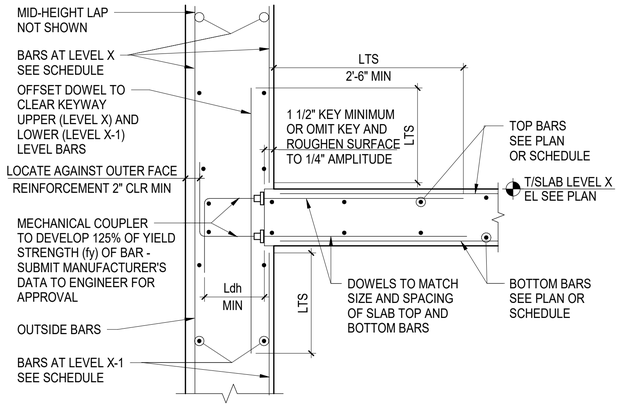

C OPTION C - MECHANICAL COUPLERS

(IN WALL POURED
MONOLITHIC)

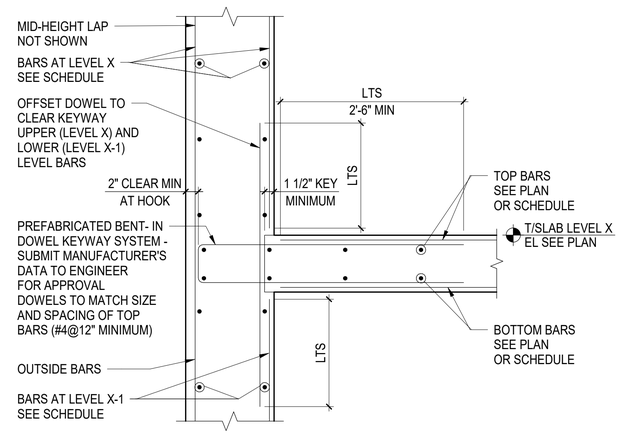

B OPTION B - PREFABRICATED DOWELS AND KEYWAY

(IN WALL POURED
MONOLITHIC)

NOTES:

1. SEE GENERAL NOTES FOR LAP SPLICE LOCATIONS FOR VERTICAL WALL REINFORCEMENT

2 TYPICAL CONCRETE SLAB SUPPORT DETAILS AT FOUNDATION WALL

NOT TO SCALE

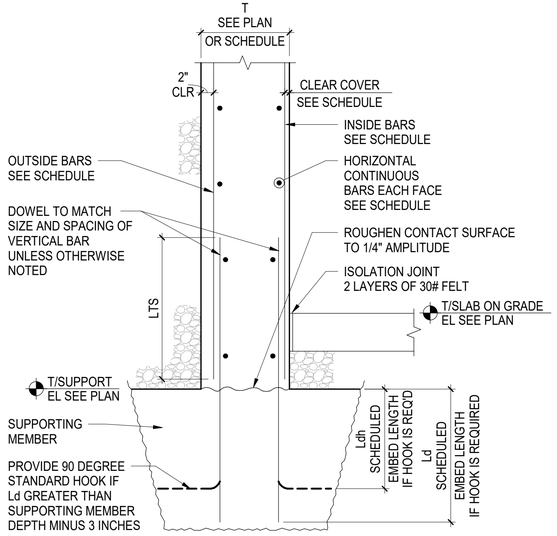

3 TYPICAL BOTTOM OF FOUNDATION WALL

NOT TO SCALE

C:\Scratch\N18168.00_4790 BROADWAY_R19_CWard.rvt

Client:

RANGER PROPERTIES
4790 BROADWAY
NEW YORK, NY 10034

Architect / Engineer:

FOGARTY FINGER
architecture | interiors
69 Walker St, New York, NY 10013
t 212 966 7450 f 212 966 7444

Library Architect:

Andrew Berman Architect, PLLC
77 Chambers Street, 4th Floor
New York, NY 10007
Tel 212.226.5998

Structural:

Thornton Tomasetti
51 Madison Avenue
New York, NY 10010
Tel 917.661.7800

MEP / FP:

Concessi Engineering, PC
499 7th Avenue, 11th Floor South Tower
New York, NY 10018
Tel 212.629.6810

FACADE:

SIMPSON GUMPERTZ & HEGER
550 7th Avenue, 10th Floor
New York, NY 10018
Tel 212.271.7000

CODE:

METROPOLIS
22 Courtland Street, 10th Floor
New York, NY 10007
Tel 212.233.6344

No.	Date	Issue
2	DD ESTIMATING	02.06.2019
1	SCHEMATIC DESIGN	11.20.2018

Project:

4790 BROADWAY
NEW YORK, NY 10034

Drawing Title:

TYPICAL FOUNDATION
WALL DETAILS AND
SCHEDULE

Seal & Signature:

DATE (MM-DD-YY): 02/06/19
PROJECT No.: N18168.00
DRAWING BY: AP
CHK BY: SB
DWG. No.: FO-305.00
CADD FILE No.:

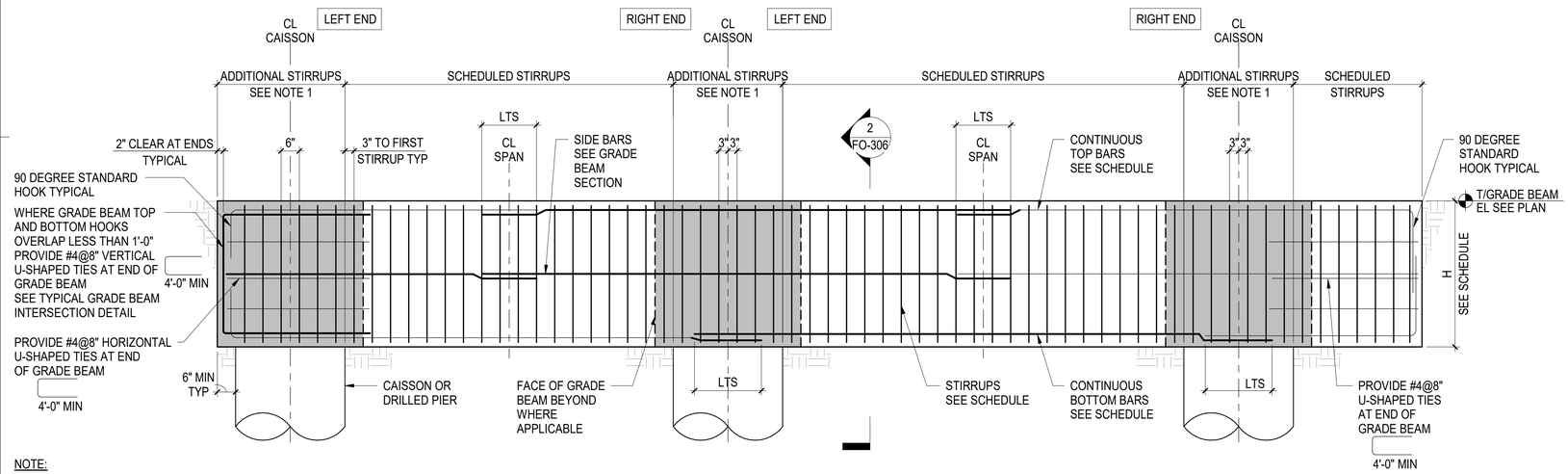

NOTE:

1. PROVIDE #4@6" TYPE 2A STIRRUPS OVER CAISSON SUPPORT TYPICAL

1 TYPICAL GRADE BEAM ELEVATION

NOT TO SCALE

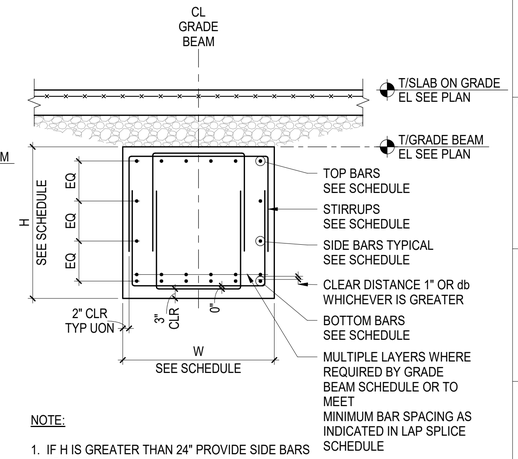

NOTE:

1. IF H IS GREATER THAN 24" PROVIDE SIDE BARS #5@10" MINIMUM UON IN SCHEDULE

2 GRADE BEAM SECTION - TYPICAL

NOT TO SCALE

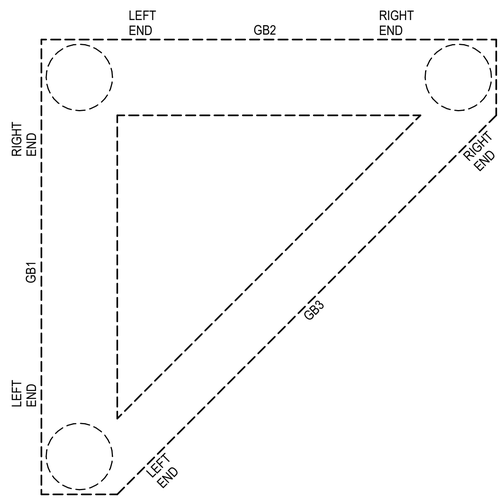

3 GRADE BEAM ORIENTATION KEY PLAN

NOT TO SCALE

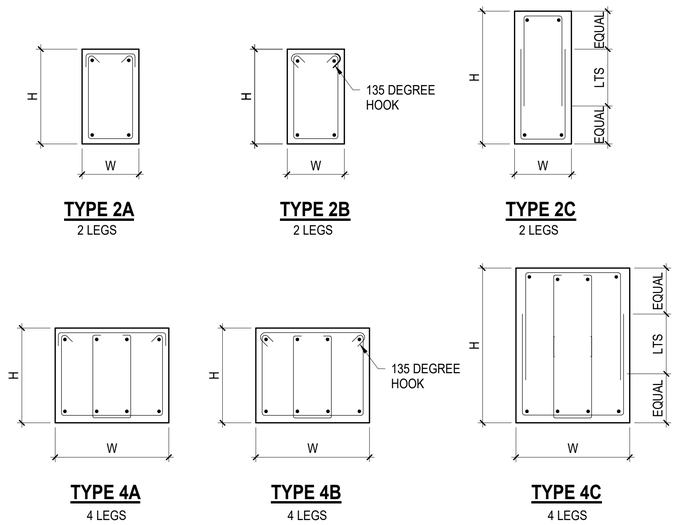

4 GRADE BEAM STIRRUP TYPES

NOT TO SCALE

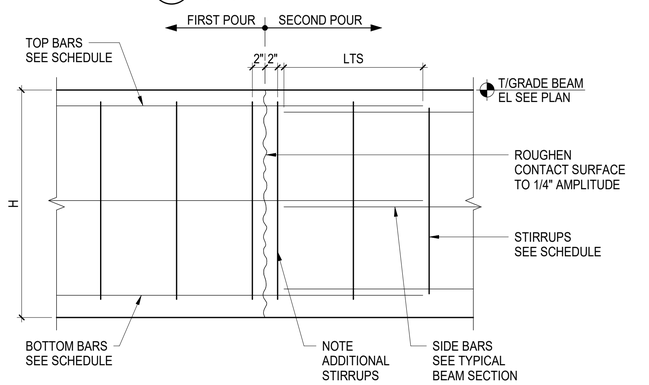

NOTES:

1. CONTRACTOR SHALL SUBMIT CONCRETE CONSTRUCTION JOINT LAYOUT FOR REVIEW AND ACTION (REFER TO GENERAL NOTES AND SPECIFICATIONS) PRIOR TO REINFORCEMENT SUBMITTAL

2. HORIZONTAL CONSTRUCTION JOINTS ARE NOT PERMITTED WITHOUT PRIOR WRITTEN APPROVAL FROM SER

5 TYPICAL GRADE BEAM CONSTRUCTION JOINT - ELEVATION

NOT TO SCALE

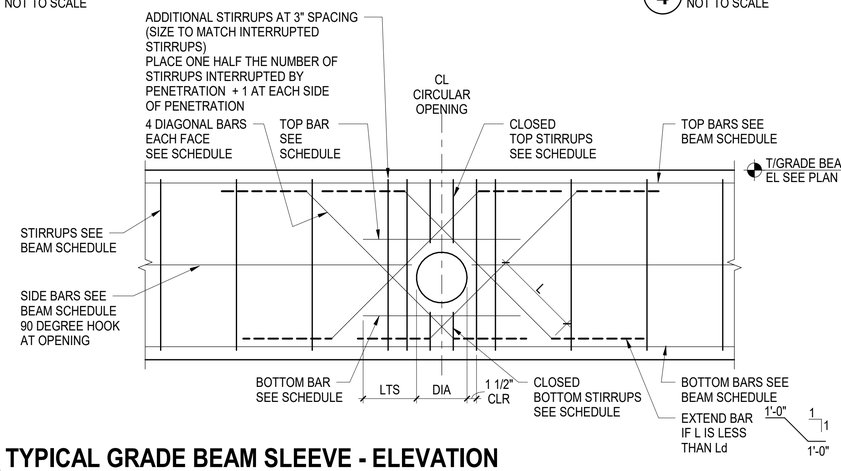

6 TYPICAL GRADE BEAM SLEEVE - ELEVATION

NOT TO SCALE

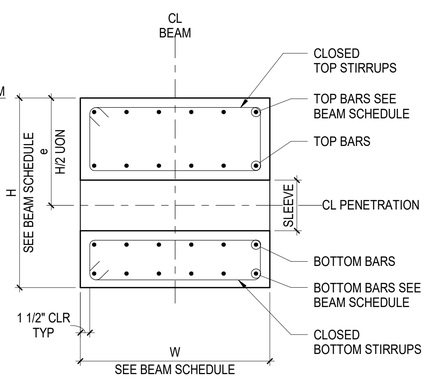

NOTES:

1. ALL BEAM PENETRATIONS SHALL BE SHOWN ON THE SHOP DRAWINGS FOR REVIEW BY THE DESIGN PROFESSIONALS NO PENETRATIONS SHALL BE MADE WITHOUT PRIOR WRITTEN APPROVAL FROM THE DESIGN PROFESSIONALS

2. THESE DETAILS SHALL BE USED IN CONJUNCTION WITH CONCRETE BEAM PENETRATION SCHEDULE

3. THE MINIMUM CLEAR SPACE BETWEEN TWO ADJACENT PENETRATIONS SHALL BE GREATER OF THE LARGEST PENETRATION DIMENSION OR TWO TIMES THE BEAM DEPTH

4. THE MINIMUM CLEAR DIMENSION BETWEEN THE EDGE OF A PENETRATION AND THE FACE OF SUPPORT SHALL BE THE DEPTH OF THE BEAM

5. SEE STRUCTURAL DRAWINGS FOR PENETRATIONS. GENERAL CONTRACTOR SHALL VERIFY QUANTITY, SIZE, AND LOCATION OF ALL PENETRATIONS WITH MEP DRAWINGS. NOTIFY THE SER IN WRITING OF ANY DISCREPANCIES FOR REVIEW AND ACTION

6. NO ADDITIONAL REINFORCEMENT IS REQUIRED FOR OPENINGS WITH 4" DIAMETER OR SMALLER PROVIDED NO BEAM REINFORCEMENT IS INTERRUPTED AND MINIMUM CONCRETE COVER IS PROVIDED AROUND ALL BARS. IT IS ACCEPTABLE TO ADJUST BEAM REINFORCEMENT WITHIN MAXIMUM SPACING LIMITS FOR STIRRUPS OR SIDE BARS

Client:

RANGER PROPERTIES
4790 BROADWAY
NEW YORK, NY 10034

Architect / Engineer:

FOGARTY FINGER architecture | interiors
69 Walker St, New York, NY 10013
t 212 966 7450 f 212 966 7444

Library Architect:

Andrew Berman Architect, PLLC
77 Chambers Street, 4th Floor
New York, NY 10007
Tel 212.226.5998

Structural:

Thornton Tomasetti
51 Madison Avenue
New York, NY 10010
Tel 917.661.7800

MEP / FP:

Concessi Engineering, PC
499 7th Avenue, 11th Floor South Tower
New York, NY 10018
Tel 212.629.6810

FACADE:

SIMPSON GUMPERTZ & HEGER
550 7th Avenue, 10th Floor
New York, NY 10018
Tel 212.271.7000

CODE:

METROPOLIS
22 Courtland Street, 10th Floor
New York, NY 10007
Tel 212.233.6344

No.	Date	Issue
2	DD ESTIMATING	02.06.2019
1	SCHEMATIC DESIGN	11.20.2018

Project:

4790 BROADWAY
NEW YORK, NY 10034

Drawing Title:

TYPICAL GRADE BEAM DETAILS

Seal & Signature:

DATE (MM-DD-YY): 02/06/19
PROJECT No.: N18168.00
DRAWING BY: AP
CHK BY: SB
DWG. No.: FO-306.00
CADD FILE No.:

C:\Sites\N18168.00_4790 BROADWAY_R19_DWeid.rvt

GRADE BEAM SCHEDULE

f'c = SEE GENERAL NOTES

GRADE BEAM MARK	SIZE		REINFORCEMENT							REMARKS
	W (IN)	H (IN)	LEFT END TOP BARS	RIGHT END TOP BARS	BOTTOM BARS	SIDE BARS EACH FACE SEE NOTE 3	STIRRUPS TYPE	STIRRUPS SIZE	STIRRUPS SPACING EACH END	
GB1	24	36	7#9	7#9	7#9	6#8	2A	#4	8"	
GB2										

NOTES:

1. SEE PLAN FOR TOP OF GRADE BEAM ELEVATION
2. LEFT END AND RIGHT END OF BEAM ARE DEFINED ON BEAM ORIENTATION KEY PLAN
3. SEE TYPICAL GRADE BEAM SECTION DETAIL WHERE NO SIDE BARS ARE INDICATED

REINFORCEMENT LEGEND:

NUMBER OF BARS — BAR SIZE — BAR LENGTH

3#9x7'-2"

1 GRADE BEAM SCHEDULE

NOT TO SCALE

Client:

RANGER PROPERTIES
4790 BROADWAY
NEW YORK, NY 10034

Architect / Engineer:

FOGARTY FINGER architecture | interiors
69 Walker St, New York, NY 10013
t 212 966 7450 f 212 966 7444

Library Architect:

Andrew Berman Architect, PLLC
77 Chambers Street, 4th Floor
New York, NY 10007
Tel 212.226.5998

Structural:

Thornton Tomasetti
51 Madison Avenue
New York, NY 10010
Tel 917.661.7800

MEP / FP:

Concessi Engineering, PC
499 7th Avenue, 11th Floor South Tower
New York, NY 10018
Tel 212.629.6810

FACADE:

SIMPSON GUMPERTZ & HEGER
550 7th Avenue, 10th Floor
New York, NY 10018
Tel 212.271.7000

CODE:

METROPOLIS
22 Courtland Street, 10th Floor
New York, NY 10007
Tel 212.233.6344

No.	Date	Issue
2	DD ESTIMATING	02.06.2019
1	SCHEMATIC DESIGN	11.20.2018

Project:

4790 BROADWAY
NEW YORK, NY 10034

Drawing Title:

GRADE BEAM SCHEDULES

Seal & Signature:

DATE (MM-DD-YY): 02/06/19
PROJECT No.: N18168.00
DRAWING BY: AP
CHK BY: SB
DWG. No.: FO-307.00
CADD FILE No.:

C:\Scratch\N18168.00_4790 BROADWAY_R19_CWard.rvt

RANGER PROPERTIES

FOGARTY FINGER ARCHITECTS

4790 BROADWAY
NEW YORK, NY 10034

ISSUED TO DOB

02/06/2019

STRUCTURAL DRAWING LIST

SHEET #	SHEET NAME
FO-205	FOUNDATION SECTIONS
S-701	TYPICAL MASONRY NON-BEARING WALL SCHEDULES II
S-703	TYPICAL MASONRY NON-BEARING WALL DETAILS II
S-705	TYPICAL MASONRY NON-BEARING WALL DETAILS IV
S-706	TYPICAL MASONRY NON-BEARING WALL DETAILS V
S-711	Unnamed
GS6	
GS6-001	GOOD START MASONRY NON-BEARING WALL SCHEDULES
GS6-101	GOOD START MASONRY DETAILS
GS6-300	GOOD START MASONRY NON-BEARING WALL TO CONCRETE DETAILS
S0 SERIES: GENERAL	
FO-001	NYCTA GENERAL NOTES I
FO-002	NYCTA GENERAL NOTES II
S-000	COVER SHEET & DRAWING LIST
S-001	GENERAL NOTES-I
S-002	GENERAL NOTES-II
S-003	GENERAL NOTES-III
S-004	LAP SPLICE SCHEDULES I
S-005	LAP SPLICE SCHEDULE II
S-006	LAP SPLICE SCHEDULE III
S-010	REFERENCE LOADING DIAGRAMS I
S1 SERIES: CONSTRUCTION PLAN	
FO-100	FOUNDATION PLAN
FO-101	SITE PLAN
S-101	LEVEL 1 CONSTRUCTION PLAN
S-102	LEVEL 2 CONSTRUCTION PLAN
S-103	LEVEL 3 CONSTRUCTION PLAN
S-104	LEVEL 4 - 10 CONSTRUCTION PLAN
S-105	LEVEL 11 CONSTRUCTION PLAN
S-106	LEVEL 12 - 13 CONSTRUCTION PLAN
S-107	LEVEL 14 CONSTRUCTION PLAN
S-108	LEVEL 15 ROOF CONSTRUCTION PLAN
S2 SERIES: SECTIONS	
FO-200	NYC TA SECTIONS I
FO-201	FOUNDATION SECTIONS
FO-202	FOUNDATION SECTIONS
FO-203	FOUNDATION SECTIONS
FO-204	FOUNDATION SECTIONS
S3 SERIES: LATERAL SYSTEM ELEVATIONS AND DETAILS	
FO-300	TYPICAL FOOTING DETAILS AND SCHEDULE
FO-301	TYPICAL COMBINED FOOTING DETAILS AND SCHEDULE
FO-302	TYPICAL SLAB ON GRADE DETAILS-I
FO-303	TYPICAL SLAB ON GRADE DETAILS-II
FO-304	TYPICAL FOUNDATION WALL DETAILS
FO-305	TYPICAL FOUNDATION WALL DETAILS AND SCHEDULE
FO-306	TYPICAL GRADE BEAM DETAILS
FO-307	GRADE BEAM SCHEDULES
S-300	SHEAR WALL PLANS AND ELEVATIONS I
S-301	SHEAR WALL PLANS AND ELEVATIONS II
S-302	TYPICAL CONCRETE SHEAR WALL DETAILS
S-303	TYPICAL CONCRETE SHEAR WALL DETAILS
S4 SERIES: COLUMN SCHEDULE	
S-400	COLUMN SCHEDULE
S-401	COLUMN SCHEDULE
S-402	TYPICAL CONCRETE COLUMN DETAILS-I
S-403	TYPICAL CONCRETE COLUMN DETAILS-II
S-404	CONCRETE BEAM SCHEDULES
S-405	TYPICAL CONCRETE BEAM DETAILS-I
S-406	TYPICAL CONCRETE BEAM DETAILS-II
S-407	TYPICAL CONCRETE SLAB DETAILS
S-408	TYPICAL CONCRETE TWO-WAY SLAB DETAILS
S-409	TYPICAL CONCRETE TWO-WAY SLAB DETAILS
S7 SERIES: MASONRY SCHEDULES AND DETAILS	
GS6-102	GOOD START MASONRY NON-BEARING WALL DETAILS
S-700	TYPICAL MASONRY NON-BEARING WALL SCHEDULES I
S-702	TYPICAL MASONRY NON-BEARING WALL DETAILS I
S-704	TYPICAL MASONRY NON-BEARING WALL DETAILS III
Grand total: 60	

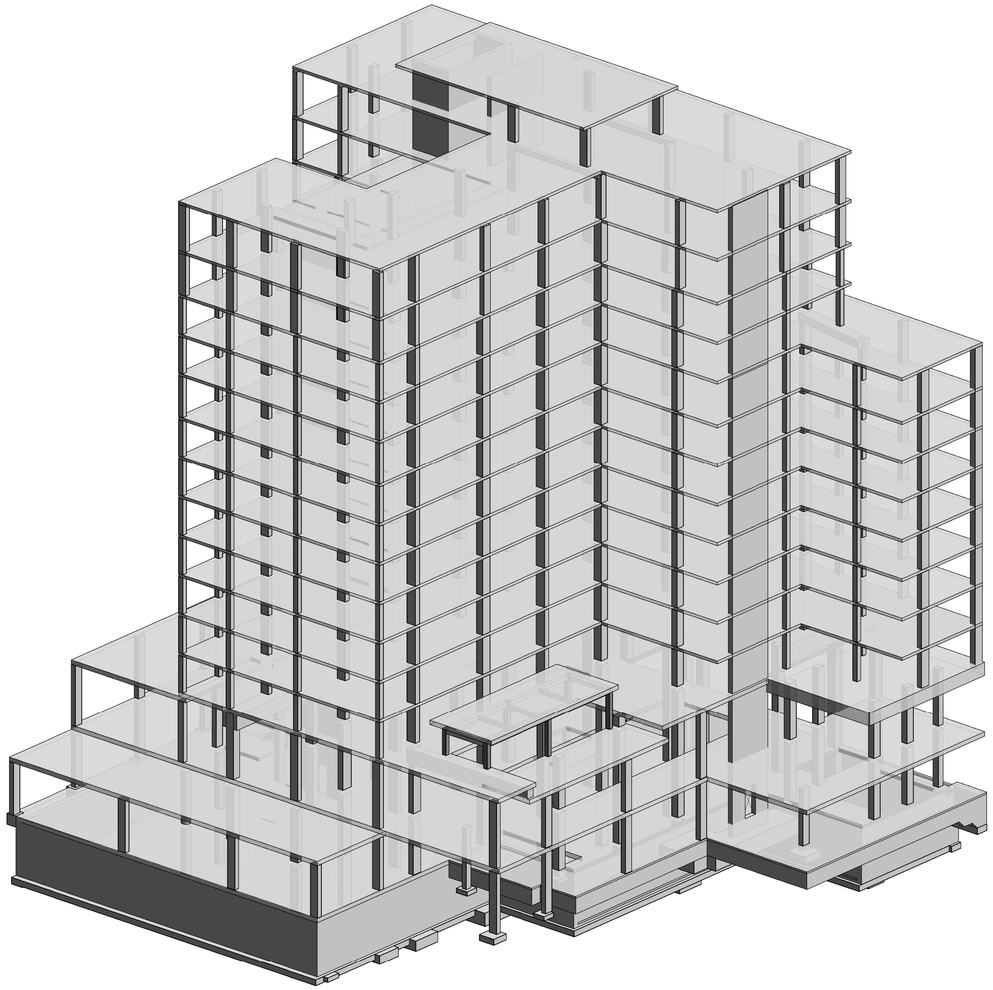

Client:

RANGER PROPERTIES
4790 BROADWAY
NEW YORK, NY 10034

Architect / Engineer:

FOGARTY FINGER
architecture | interiors

69 Walker St, New York, NY 10013
t 212 966 7450 f 212 966 7444

Library Architect:

Andrew Berman Architect, PLLC
77 Chambers Street, 4th Floor
New York, NY 10007
Tel 212.226.5998

Structural:

Thornton Tomasetti
51 Madison Avenue
New York, NY 10010
Tel 917.661.7800

MEP / FP:

Concessi Engineering, PC
499 7th Avenue, 11th Floor South Tower
New York, NY 10018
Tel 212.629.6810

FACADE:

SIMPSON GUMPERTZ & HEGER
550 7th Avenue, 10th Floor
New York, NY 10018
Tel 212.271.7000

CODE:

METROPOLIS
22 Courtland Street, 10th Floor
New York, NY 10007
Tel 212.233.6344

No.	Date	Issue
2	DD ESTIMATING	02.06.2019
1	SCHEMATIC DESIGN	11.20.2018

Project:

4790 BROADWAY
NEW YORK, NY 10034

Drawing Title:

COVER SHEET & DRAWING LIST

Seal & Signature:

DATE (MM-DD-YY):	02/06/19
PROJECT No.:	N18168.00
DRAWING BY:	AP
CHK BY:	SB
DWG. No.:	S-000.00
CADD FILE No.:	

C:\Users\N18168.00_4790 BROADWAY_R19_CV.rvt

GR GENERAL REQUIREMENTS

GR-1 AS USED IN THESE GENERAL NOTES:
"DRAWINGS" MEANS THE LATEST STRUCTURAL DESIGN DRAWINGS, UON.
"SPECIFICATIONS" MEANS THE LATEST PROJECT SPECIFICATIONS, UON.
"CONTRACT DOCUMENTS" IS DEFINED AS THE DESIGN DRAWINGS AND THE SPECIFICATIONS
"SER" IS DEFINED AS THE STRUCTURAL ENGINEER OF RECORD FOR THE STRUCTURE IN ITS FINAL CONDITION.
"DESIGN PROFESSIONALS" IS DEFINED AS THE OWNER'S ARCHITECT AND SER.
"MEP" INCLUDES, BUT IS NOT LIMITED TO MECHANICAL, ELECTRICAL, PLUMBING, FIRE PROTECTION.
"CONTRACTOR" IS DEFINED TO INCLUDE ANY OF THE FOLLOWING: GENERAL CONTRACTOR AND THEIR SUBCONTRACTORS, CONSTRUCTION MANAGER AND THEIR SUBCONTRACTORS, STRUCTURAL STEEL FABRICATOR OR STRUCTURAL STEEL ERECTOR.
"BASE BUILDING STRUCTURE" IS DEFINED AS THE STRUCTURAL FRAME DESIGNED BY THORNTON TOMASETTI.
"STRUCTURE IN ITS FINAL CONDITION" MEANS ALL STRUCTURAL ELEMENTS SHOWN ON THE STRUCTURAL CONTRACT DOCUMENTS ARE INSTALLED AND COMPLETELY CONNECTED AND INSPECTED WITH NO OUTSTANDING NON-COMPLIANCE ISSUES.
"DELEGATED DESIGN" MEANS A SCOPE OF WORK THAT MEETS PERFORMANCE CRITERIA ESTABLISHED IN THE CONTRACT DOCUMENTS AND IS TO BE COMPLETED BY THE CONTRACTOR'S LICENSED ENGINEER.

GR-2 THE CONTRACTOR IS RESPONSIBLE FOR COORDINATION OF THE STRUCTURAL WORK WITH THE ARCHITECTURAL, CIVIL, MEP CONTRACT DOCUMENTS, AS WELL AS ANY OTHER APPLICABLE TRADES.

GR-3 THE CONTRACTOR IS RESPONSIBLE FOR THE STABILITY OF THE STRUCTURE UNTIL THE CONSTRUCTION OF THE STRUCTURE REACHES ITS FINAL CONDITION.

GR-4 THE CONTRACTOR IS SOLELY RESPONSIBLE FOR THE DESIGN, INSTALLATION, AND REMOVAL OF TEMPORARY BRACING AND CONSTRUCTION SUPPORTS, FOR NEW AND EXISTING STRUCTURES, AS NECESSARY TO COMPLETE THE PROJECT. NO PORTION OF THE PROJECT WHILE UNDER CONSTRUCTION IS INTENDED TO BE STABLE IN THE ABSENCE OF THE CONTRACTOR'S TEMPORARY SUPPORTS AND BRACES. CONTRACTOR SHALL RETAIN A PROFESSIONAL ENGINEER LICENSED IN THE STATE WHERE THE PROJECT IS LOCATED TO DESIGN TEMPORARY BRACING AND CONSTRUCTION SUPPORTS.

GR-5 LATERAL LOAD RESISTANCE AND STABILITY OF THE STRUCTURE IN ITS FINAL CONDITION IS PROVIDED BY SHEAR WALLS AND LATERAL STABILITY OF OTHER ELEMENTS IS PROVIDED THROUGH FLOOR SLABS.

GR-6 THE SPECIFICATIONS ARE AN INTEGRAL PART OF THE CONTRACT DOCUMENTS AND SHALL BE USED IN CONJUNCTION WITH THE STRUCTURAL DRAWINGS.

GR-7 THE CONTRACTOR SHALL VERIFY ALL EXISTING DIMENSIONS AND CONDITIONS AND COORDINATE WITH THE STRUCTURAL DRAWINGS, ARCHITECTURAL DRAWINGS, DRAWINGS FROM OTHER CONSULTANTS, PROJECT SHOP DRAWINGS AND FIELD CONDITIONS.

GR-8 IN CASES OF CONFLICT BETWEEN DRAWINGS AND/OR SPECIFICATIONS AND OTHER DISCIPLINES OR EXISTING CONDITIONS, CONTRACTOR SHALL NOTIFY THE DESIGN PROFESSIONALS AND OBTAIN CLARIFICATION PRIOR TO BIDDING AND PROCEEDING WITH WORK.

GR-9 APPLY DETAILS, SECTIONS, AND NOTES ON THE DRAWINGS WHERE CONDITIONS ARE SIMILAR TO THOSE INDICATED BY DETAIL, DETAIL TITLE OR NOTE.

GR-10 ONLY USE DIMENSIONS INDICATED ON THE DRAWINGS. DO NOT SCALE DRAWINGS.

GR-11 ASSUME EQUAL SPACING BETWEEN ESTABLISHED DIMENSIONS, IF NOT INDICATED ON DRAWINGS.

GR-12 CENTERLINES OF COLUMNS AND FOUNDATIONS COINCIDE WITH GRID LINE INTERSECTIONS, UON.

GR-13 CENTERLINES OF GRADE BEAMS AND WALLS COINCIDE WITH CENTERLINES OF FOUNDATIONS, UON.

GR-14 CENTERLINES OF FRAMING MEMBERS COINCIDE WITH COLUMN CENTERLINES, UON.

GR-15 THE CONTRACTOR SHALL PROTECT EXISTING FACILITIES, STRUCTURES AND UTILITIES FROM DAMAGE.

GR-16 THE CONTRACTOR SHALL VERIFY THAT CONSTRUCTION LOADS DO NOT EXCEED THE CAPACITY OF THE STRUCTURE AT THE TIME THE LOAD IS APPLIED.

GR-17 THE CONTRACTOR SHALL COORDINATE THE BOTTOM OF BASE PLATE ELEVATIONS WITH THE AS-BUILT TOP OF SUPPORT ELEVATIONS.

GR-18 THE CONTRACTOR SHALL VERIFY ALL OPENING SIZES AND LOCATIONS WITH OTHER DISCIPLINES. THE DRAWINGS DO NOT SHOW ALL OPENINGS REQUIRED. ADDITIONAL OPENINGS, BLOCKOUTS AND SLEEVES MAY BE REQUIRED BY OTHER DISCIPLINES AND SHALL BE CONSTRUCTED USING THE TYPICAL DETAILS AND/OR THE CRITERIA INDICATED ON THE DRAWINGS. OPENINGS REQUIRED BUT NOT SHOWN ON THE STRUCTURAL DRAWINGS MUST BE APPROVED BY THE SER.

GR-19 ELEVATIONS INDICATED ON STRUCTURAL DRAWINGS ARE BASED ON A PROJECT DATUM INDICATED ON THE ARCHITECTURAL DRAWINGS.

GR-20 SEE ARCHITECTURAL, CIVIL, MEP, AND VERTICAL TRANSPORTATION, CONTRACT DOCUMENTS FOR ADDITIONAL INFORMATION RELATING TO THE COORDINATION OF STRUCTURAL COMPONENTS INCLUDING, BUT NOT LIMITED TO:

ARCHITECTURAL:
PLAN DIMENSIONS AND PROJECT DATUM
SLAB EDGE DIMENSIONS
FINISH ELEVATIONS
WATERPROOFING AND DAMP-PROOFING DETAILS
RAMP GEOMETRY, PITS, SLAB SLOPES AND DEPRESSIONS
EMBEDMENTS, INSERTS, BLOCKOUTS, ETC.
EXACT OPENING SIZES FOR PIPES, DUCTS, ETC.
CONCRETE FINISHES AND TOPPING SLABS
CONCRETE CURBS AND HOUSEKEEPING PADS
INTERIOR NON-STRUCTURAL MASONRY PARTITIONS
FIRE RATINGS
METAL PAN STAIRS AND SUPPORTS
OPERABLE PARTITIONS

MEP:
PIPE AND DUCT SIZES FOR OPENING AND SLEEVE COORDINATION
FLOOR DRAINS
UNDERFLOOR AND PERIMETER DRAINAGE SYSTEMS
EQUIPMENT CURBS
CONDUITS AND EMBEDMENTS IN WALLS AND SLABS

VERTICAL TRANSPORTATION:
INSERTS, HANGERS, TRENCHES, PITS, CONDUITS IN WALLS AND SLABS
EQUIPMENT SUPPORT, ELEVATOR DIVIDER BEAMS, EMBEDMENTS, AND ANCHOR RODS

CD CODES AND DESIGN CRITERIA

CD-1 PERFORM ALL CONSTRUCTION IN CONFORMANCE WITH THE BUILDING AND DESIGN CODES REFERENCED WITHIN THESE DOCUMENTS. THE PROJECT DOCUMENTS REFER TO THE FOLLOWING CODES AND STANDARDS, UON:

NEW YORK CITY BUILDING CODE, 2014, REFERENCING INTERNATIONAL BUILDING CODE, 2009.

STRUCTURAL CONCRETE:
"BUILDING CODE REQUIREMENTS FOR STRUCTURAL CONCRETE"
THE AMERICAN CONCRETE INSTITUTE (ACI 318-11)

CONCRETE MASONRY:
"BUILDING CODE REQUIREMENTS FOR CONCRETE MASONRY STRUCTURES"
THE AMERICAN CONCRETE INSTITUTE (ACI 530-08)

STRUCTURAL STEEL:
"SPECIFICATION FOR STRUCTURAL STEEL BUILDINGS", (AISC 360-05) CONFORMING TO THE PROVISIONS OF LOAD RESISTANCE FACTOR DESIGN, BY THE AMERICAN INSTITUTE OF STEEL CONSTRUCTION (AISC-LRFD)

CD -2 SEE DESIGN LOAD DIAGRAMS ON SHEET S-010 FOR LOCATIONS AND EXTENT OF LIVE LOAD.

CD-3 SEE DESIGN LOAD DIAGRAMS ON SHEET S-010 FOR LOCATIONS AND EXTENT OF SUPERIMPOSED DEAD LOADS.

CD-4 OCCUPANCY II

CD-5 SNOW LOADS:

FLAT ROOF SNOW LOAD (Pf):	20 PSF
GROUND SNOW LOAD (Pg)	25 PSF
SNOW EXPOSURE FACTOR (Ce):	0.9
SNOW LOAD IMPORTANCE FACTOR (Is):	1.0
THERMAL FACTOR (Ct):	1.0
SNOW DRIFTING PER CODE	

CD-6 WIND LOAD DESIGN DATA:

MAIN WIND FORCE RESISTING SYSTEM	
BASIC WIND SPEED, V	98 MPH
EXPOSURE	B
WIND IMPORTANCE FACTOR (Iw)	1.0
INTERNAL PRESSURE COEFFICIENT	± 0.18

COMPONENT AND CLADDING DESIGN PRESSURES a = 11'-6"
EFFECTIVE WIND AREA = 10 SF

WALL	+ 25.32 PSF	- 25.32 PSF
WALL END ZONE	+ 25.32 PSF	- 46.61 PSF

ROOF EFFECTIVE WIND AREA = 10 SF

ROOF	+ 10 PSF	- 37.04 PSF
ROOF EDGE	+ 10 PSF	- 58.13 PSF
ROOF CORNER	+ 10 PSF	- 79.23 PSF

CD-7 SEISMIC LOAD DESIGN DATA:

SEISMIC IMPORTANCE FACTOR (I_s)	1.25
S_s	0.365 g
S_1	0.071 g
S_{DS}	0.382 g
S_{D1}	0.113 g
SITE CLASS	D
SEISMIC DESIGN CATEGORY	B
LATERAL SYSTEM DESCRIPTION	ORDINARY CONCRETE SHEAR WALLS INTERACTIVE WITH ORDINARY CONCRETE MOMENT FRAMES
SEISMIC RESPONSE COEFFICIENT (Cs)	0.021
RESPONSE MODIFICATION FACTOR (R)	4.5
ANALYSIS PROCEDURE DESCRIPTION	EQUIVALENT LATERAL FORCE
DESIGN BASE SHEAR	750 KIPS

CD-9 IN CASES WHERE THE CONTRACTOR DETERMINES THAT SUSPENDED OR FLOOR MOUNTED EQUIPMENT LOADS EXIST WHICH EXCEED DESIGN LOADS INDICATED ON CONTRACT DOCUMENTS, CONTRACTOR SHALL SUBMIT LOAD DATA TO DESIGN PROFESSIONALS FOR REVIEW PRIOR TO PROCEEDING WITH WORK.

CD-10 DISTRIBUTE THE MAXIMUM LOAD HUNG FROM ANY STRUCTURAL MEMBER FOR DUCTWORK, PIPING ETC OVER THE MEMBER'S TRIBUTARY AREA IN A WAY THAT THE MEP DESIGN SUPERIMPOSED DEAD LOADS LISTED IN CONTRACT DOCUMENTS ARE NOT EXCEEDED. THE CONTRACTOR SHALL COORDINATE THE LOADS OF ALL TRADES AND PROVIDE ADDITIONAL SUPPORT OR DISTRIBUTION FRAMING AS REQUIRED TO ACHIEVE THE ALLOWABLE LOAD DISTRIBUTION.

CD-12 ELEVATOR GUIDERAIL SUPPORTS, MACHINE ROOMS, PITS, AND PENTHOUSES ARE BASED ON ELEVATOR TYPES INDICATED ON ARCHITECTURAL CONTRACT DOCUMENTS. CONTRACTOR SHALL SUBMIT FOR REVIEW ANY PLANNED CHANGE TO ELEVATORS TO DESIGN PROFESSIONALS PRIOR TO SUBMITTING CORRESPONDING STRUCTURAL SHOP DRAWINGS FOR ACTION.

CD-13 STRUCTURAL COMPONENTS ARE NOT DESIGNED FOR VIBRATING EQUIPMENT. MOUNT VIBRATING EQUIPMENT ON VIBRATION ISOLATORS.

CD-14 SERVICEABILITY

LIVE LOAD DEFLECTION IS LESS THAN L/360

LONG-TERM TOTAL DEFLECTION IS LESS THAN L/240

EXTERIOR EDGE BEAMS HAVE BEEN DESIGNED TO LIMIT LIVE LOAD MIDSPAN VERTICAL DEFLECTION TO 1/360 OF THE SPAN OR 1/2", WHICHEVER IS LESS.

EXTERIOR EDGE BEAMS HAVE BEEN DESIGNED TO LIMIT DEAD PLUS SUPERIMPOSED DEAD LOAD MIDSPAN VERTICAL DEFLECTION TO 1/240 OF THE SPAN OR 3/4", WHICHEVER IS LESS.

LATERAL DRIFT DUE TO WIND LOADS IS LESS THAN OR EQUAL TO H/400

CD-15 CONNECTIONS OF SYSTEMS DESIGNED BY CONTRACTOR'S ENGINEER SUCH AS, BUT NOT LIMITED TO, CLADDING, STAIRS, ELEVATORS, ESCALATORS, PRECAST, AND MEP LOADS ARE ASSUMED TO IMPOSE VERTICAL AND/OR HORIZONTAL LOADS ON THE BASE BUILDING STRUCTURAL MEMBERS WITHOUT GENERATING TORSION IN THE SUPPORTING STRUCTURAL MEMBERS. CONTRACTOR IS RESPONSIBLE FOR FURNISHING AND INSTALLING ALL SUPPLEMENTARY BRACING MEMBERS AS REQUIRED TO PREVENT TORSION ON THE BASE BUILDING STRUCTURE.

CD-16 FOR FIRE RATING AND FIREPROOFING ASSEMBLY EVALUATIONS, CONSIDER THE FOLLOWING ASSEMBLIES RESTRAINED: COMPOSITE WIDE-FLANGE STEEL FRAMING, INTERIOR BAYS OF CONTINUOUS CAST-IN-PLACE CONCRETE CONSTRUCTION. CONSIDER ALL OTHER ASSEMBLIES UNRESTRAINED.

SU SUBMITTALS

SU-1 TWENTY WORKING DAYS PRIOR TO SUBMITTING SHOP DRAWINGS, THE CONTRACTOR SHALL SUBMIT FOR SER'S REVIEW A SCHEDULE WHICH DETAILS THE ESTIMATED QUANTITY OF SHOP DRAWINGS AND THE DATE THE SHOP DRAWINGS WILL BE RECEIVED BY THE SER. THE SER SHALL HAVE THE OPPORTUNITY TO REVIEW THE PROPOSED SCHEDULE AND SUBMIT COMMENTS TO THE CONTRACTOR. THE FINAL SHOP DRAWING SCHEDULE SHALL BE DEVELOPED AND SUBMITTED TO THE SER. IN ACCORDANCE WITH THE SHOP DRAWING SCHEDULE, THE SER WILL RETURN THE SHOP DRAWING ITEMS WITHIN TEN WORKING DAYS AFTER HAVING RECEIVED THE ELECTRONIC SHOP DRAWING.

SU-2 THE CONTRACTOR IS TO REVIEW EACH SUBMITTAL PRIOR TO FORWARDING TO D ESIGN PROFESSIONALS. THE CONTRACTOR IS TO STAMP EACH SUBMITTAL VERIFYING THAT THE FOLLOWING IS ADDRESSED:

1. THE SHOP DRAWING IS REQUESTED.
2. THE SHOP DRAWING IS BASED ON THE LATEST DESIGN.
3. THE DESIGN PROFESSIONALS' COMMENTS FROM ANY PREVIOUS SUBMITTALS ARE ADDRESSED.
4. THE WORK IS COORDINATED AMONG ALL CONSTRUCTION TRADES.
5. REVISIONS FROM PREVIOUS SUBMITTALS ARE CLEARLY MARKED BY CIRCLING OR CLOUDS.
6. SUBMITTAL IS COMPLETE.
7. SUBMITTAL DOES NOT INCLUDE SUBSTITUTION REQUEST
8. SUBMITTAL SHALL INCLUDE A STAMP INDICATING PROJECT NAME AND LOCATION, SUBMITTAL NUMBER, SPECIFICATION SECTION NUMBER.

THE EOR SHALL RETURN, WITHOUT COMMENT, SUBMITTALS WHICH THE CONTRACTOR HAS NOT STAMPED OR WHICH DO NOT MEET THE ABOVE REQUIREMENTS. THE SER'S REVIEW OF SUBMITTALS SHALL BE FOR GENERAL CONFORMANCE WITH THE DESIGN INTENT. NO WORK SHALL BE STARTED WITHOUT SUCH REVIEW.

SU-3 FOR COMPONENTS THAT REQUIRE ENGINEERING BY THE CONTRACTOR, PROVIDE A NOTE ON EACH SHOP DRAWING, WRITTEN AND SIGNED BY THE SUPPLIER'S ENGINEER, INDICATING THAT THE SHOP DRAWING IS IN CONFORMANCE WITH THE CALCULATIONS OF THE CONTRACTOR'S ENGINEER.

SU-4 THE FOLLOWING ITEMS REQUIRE SUBMITTALS FOR STRUCTURAL REVIEW AS OUTLINED IN THE SPECIFICATIONS:

031000	S	CALC	CONCRETE FORMWORK
032000	S		CONCRETE REINFORCING LAYOUT
033000		CALC	CONCRETE MIX DESIGNS
033000	S		CONCRETE CONSTRUCTION JOINT LAYOUT
041000	S		MASONRY REINFORCEMENT LAYOUT

S = SHOP DRAWINGS REQUIRED

CALC = SUPPORTING CALCULATIONS REQUIRED, SEALED AND SIGNED BY A PROFESSIONAL ENGINEER LICENSED IN THE STATE WHERE THE PROJECT IS LOCATED.

SU-5 THE ITEMS IN THIS SECTION REFER TO LOADS IMPOSED BY CONTRACTOR DESIGNED SYSTEMS, SPECIFICALLY:

ARCHITECTURAL PRECAST CONCRETE AND CONNECTIONS
COLD-FORMED METAL FRAMING
EXTERIOR CLADDING SYSTEMS
METAL STAIRS
ARCHITECTURAL ORNAMENTATION (FLAGPOLES, BANNERS, MASTS, ETC.)
ELEVATOR REACTIONS
ESCALATOR REACTIONS
SKYLIGHTS
WINDOW WASHING TIEBACK OR DAVIT SYSTEMS
CATWALKS
MEP PLATFORMS

WHERE CONTRACTOR LOADS IMPOSED DO NOT EXCEED AND/OR CONNECTION CONDITIONS DO NOT DIFFER FROM WHAT IS INDICATED IN THE STRUCTURAL DRAWINGS, SUBMIT FOR RECORD A LETTER SEALED AND SIGNED BY A PROFESSIONAL ENGINEER LICENSED IN THE STATE WHERE THE PROJECT IS LOCATED STATING THE FOLLOWING:

"THE CONTRACTOR DESIGNED SYSTEM HAS BEEN DESIGNED TO IMPOSE LOADS ON THE BASE BUILDING STRUCTURE THAT ARE WITHIN THE LOAD LIMITS AND AT THE LOCATIONS INDICATED ON THE STRUCTURAL DRAWINGS."

WHERE CONTRACTOR LOADS IMPOSED FOR THE FOLLOWING ITEMS EXCEED AND/OR CONNECTION CONDITIONS DIFFER FROM WHAT IS SHOWN IN THE STRUCTURAL DRAWINGS, SUBMIT FOR APPROVAL TO EOR LOADS IMPOSED ON THE PRIMARY STRUCTURAL FRAME DUE TO THE DEAD, LIVE, AND WIND/SEISMIC LOADS INDICATED ON THE CONTRACT DOCUMENTS.

SUBMITTAL SHALL LIST THE DESIGN LOADS USED AND BE SEALED AND SIGNED BY A PROFESSIONAL ENGINEER LICENSED IN THE STATE WHERE THE PROJECT IS LOCATED. SUBMITTAL SHALL INCLUDE LOCATION, MAGNITUDE AND DIRECTION OF UNFACTORED IMPOSED LOADS, GRAPHICALLY REPRESENTED IN THEIR APPROPRIATE LOCATIONS ON A COPY OF THE CONTRACT DOCUMENT STRUCTURAL FRAMING PLANS OR ELEVATIONS AS APPROPRIATE. DETAIL REFERENCES IN THE CONNECTIONS APPLICABLE AT EACH LOCATION SHALL BE NOTED ON THE SUBMITTAL DRAWINGS.

FOR EXTERIOR WALL ASSEMBLIES, THE LOADS IMPOSED SUBMITTAL SHALL BE COMPREHENSIVE INDICATING THE LOADS IMPOSED ON THE BASE BUILDING STRUCTURE AND SHALL INCLUDE THE REACTIONS BASED ON THE ACTUAL LOADS OF THE ENTIRE ASSEMBLY, INCLUDING BUT NOT LIMITED TO GLAZING, CLADDING, METAL STUD BACKUP, AND MULLIONS.

A SUBSTITUTION REQUEST MAY BE REQUIRED WHERE CONTRACTOR LOADS IMPOSED EXCEED AND/OR CONNECTION CONDITIONS DIFFER FROM THE BASIS OF DESIGN.

FN FOUNDATIONS

FN-1 THE FOUNDATION DESIGN IS BASED ON THE GEOTECHNICAL REPORT BY FNA ENGINEERING SERVICES, P.C., 10/16/2018.

FN-2 FOUNDATIONS HAVE BEEN DESIGNED BASED ON THE FOLLOWING DESIGN VALUES FROM THE GEOTECHNICAL REPORT:

NET ALLOWABLE BEARING CAPACITY: 16,000 PSF

SEE GEOTECHNICAL REPORT FOR ADDITIONAL REQUIREMENTS AND INFORMATION. DESIGN VALUES SHALL BE FIELD VERIFIED BY QUALIFIED GEOTECHNICAL ENGINEER RETAINED BY THE OWNER.

FN-3 THE CONTRACTOR SHALL VERIFY FOUNDATION INSTALLATION AND CONSTRUCTION IS IN CONFORMANCE WITH THE RECOMMENDATIONS OUTLINED IN THE GEOTECHNICAL REPORT.

FN-4 CONTRACTOR SHALL BE RESPONSIBLE TO ADEQUATELY PROTECT ALL EXCAVATION. WHERE NECESSARY, SHEET AND SHORE THE EXCAVATION WITH ALL REQUIRED TIEBACKS AND BRACING AS DETERMINED BY CONTRACTOR'S ENGINEER.

FN-5 PROVIDE BRACING FOR ALL BASEMENT FOUNDATION WALLS PRIOR TO BACKFILLING. THIS BRACING SHALL REMAIN IN PLACE UNTIL ALL SLABS AND BEAMS FRAMING INTO WALL HAVE BEEN PLACED AND HAVE ATTAINED 100% OF THEIR DESIGN STRENGTH.

CM CONCRETE MATERIALS

CM-1 CONCRETE STRENGTH SHALL MEET THE FOLLOWING 28-DAY COMPRESSIVE STRENGTHS (f' c), UON:

FOOTINGS, PILE CAPS AND PIERS	5,000 PSI
MAT FOUNDATIONS	8,000 PSI
GRADE BEAMS	5,000 PSI
FOUNDATION WALLS, BUTTRESSES	5,000 PSI
NON-SHRINK GROUT	8,000 PSI
SLAB ON GRADE	4,000 PSI
FORMED CONCRETE SLABS AND BEAMS	8" SLABS 5,000 PSI, 12" SLABS 6,000 PSI
CONCRETE HOUSEKEEPING PADS, AND FILL SLABS	4,000 PSI LIGHTWEIGHT
COLUMNS	SEE COLUMN SCHEDULE
CONCRETE SHEAR WALLS	SEE WALL SCHEDULE

CM-2 PROVIDE NORMALWEIGHT CONCRETE WITH CURED DENSITY OF 145 +/- 5 PCF, AND AGGREGATE CONFORMING TO ASTM C33, UON. WHERE INDICATED, PROVIDE LIGHTWEIGHT CONCRETE WITH CURED DENSITY OF 112+/-3 PCF AND AGGREGATE CONFORMING TO ASTM C330.

CM-3 THE USE OF CALCIUM CHLORIDE AND OTHER CHLORIDE CONTAINING AGENTS IS PROHIBITED. THE USE OF RECYCLED CONCRETE IS PROHIBITED. PLACEMENT WITHIN AND CONTACT BETWEEN ALUMINUM ITEMS, INCLUDING ALUMINUM CONDUIT, AND CONCRETE IS PROHIBITED.

CM-4 ALL CAST-IN-PLACE CONCRETE WILL EXPERIENCE DIFFERING VARIATIONS OF CRACKING. ANY ELEMENT EXPOSED TO DIRECT WEATHER AND/OR TEMPERATURE VARIATIONS DURING CONSTRUCTION OR IN THE FINAL CONDITION IS TO BE TREATED AND REGULARLY MAINTAINED TO PREVENT PROPAGATION OF CRACKS AND WATER PENETRATION. THE CONTRACTOR SHALL DEVELOP A REGULAR MAINTENANCE PROGRAM AND SUBMIT IT TO THE OWNER.

Client:
RANGER PROPERTIES
4790 BROADWAY
NEW YORK, NY 10034

Architect / Engineer:
FOGARTY FINGER
architecture | interiors
69 Walker St, New York, NY 10013
t 212 966 7450 f 212 966 7444

Library Architect:
Andrew Berman Architect, PLLC
77 Chambers Street, 4th Floor
New York, NY 10007
Tel 212.226.5998

Structural:
Thornton Tomasetti
51 Madison Avenue
New York, NY 10010
Tel 917.661.7800

MEP / FP:
Concessi Engineering, PC
499 7th Avenue, 11th Floor South Tower
New York, NY 10018
Tel 212.629.6810

FACADE:
SIMPSON GUMPERTZ & HEGER
550 7th Avenue, 10th Floor
New York, NY 10018
Tel 212.271.7000

CODE:
METROPOLIS
22 Courtland Street, 10th Floor
New York, NY 10007
Tel 212.233.6344

No.	Issue	Date
2	DD ESTIMATING	02.06.2019
1	SCHEMATIC DESIGN	11.20.2018

Project:
4790 BROADWAY
NEW YORK, NY 10034

Drawing Title:
GENERAL NOTES-I

Seal & Signature:

DATE (MM-DD-YY):	02/06/19
PROJECT No.:	N18168.00
DRAWING BY:	AP
CHK BY:	SB
DWG. No.:	S-001.00
CADD FILE No.:	

C:\Scratch\N18168.00_4790 BROADWAY_R19_CWard.rvt

RE CONCRETE REINFORCEMENT

RE-1 ALL CONCRETE SHALL INCLUDE REINFORCEMENT. IF REINFORCEMENT IS NOT SPECIFICALLY INDICATED ON THE DRAWINGS VERIFY WITH THE SER.

RE-2 REINFORCEMENT SHALL CONFORM TO THE FOLLOWING STANDARDS AND MATERIAL PROPERTIES UON:

DEFORMED BARS:	ASTM A615 GRADE 60
WELDABLE DEFORMED BARS:	ASTM A706
EPOXY COATED DEFORMED BARS:	ASTM A615 / A775
WELDED WIRE REINFORCEMENT	ASTM A1064
EPOXY COATED WELDED WIRE REINFORCEMENT	ASTM A1064 / A884

RE-3 DETAIL REINFORCEMENT BASED ON THE PROJECT REQUIREMENTS, ACI-318 AND ACI-315, UON.

RE-4 WHERE A 90-DEG, 135 –DEG OR 180-DEG HOOK IS GRAPHICALLY INDICATED, PROVIDE CORRESPONDING ACI STANDARD HOOKS UON.

RE-5 DOWELS SHALL MATCH SIZE AND SPACING OF MAIN REINFORCEMENT UON.

RE-6 REINFORCEMENT SHALL HAVE CONCRETE PROTECTION (CLEAR COVER) PER ACI 318 UNLESS OTHERWISE INDICATED ON THE DRAWINGS.

CONCRETE CAST AGAINST AND PERMANENTLY EXPOSED TO EARTH	3"
CONCRETE FORMED AND EXPOSED TO EARTH OR WEATHER	2"
COLUMNS OVER TIES	1 ½"
INTERIOR BEAMS OVER STIRRUPS	1 ½"
WALLS NOT EXPOSED TO WEATHER	1"
SLABS NOT EXPOSED TO WEATHER	¾"

RE-7 LAP REINFORCEMENT ONLY AT LOCATIONS AS SPECIFICALLY DETAILED ON THE DRAWINGS EXCEPT REINFORCEMENT MARKED AS CONTINUOUS CAN BE SPLICED AT LOCATIONS DETERMINED BY CONTRACTOR USING TENSION LAP SPLICES (LTS). SEE LAP SPLICE AND EMBEDMENT SCHEDULE.

RE-8 UNLESS OTHERWISE NOTED ALL LAP SPLICES ARE TO BE TENSION LAP SPLICES PER LAP SPLICE AND EMBEDMENT SCHEDULE.

RE-9 PROVIDE MECHANICAL SPLICES FOR BARS LARGER THAN #11 OR WHERE INDICATED. PROVIDE TENSILE, PRE-QUALIFIED, WELDED OR THREADED MECHANICAL SPLICES UON.

RE-10 LAP WELDED WIRE REINFORCEMENT TWO PANEL SPACINGS, UON.

RE-11 PROVIDE LAP SPLICE LOCATIONS AS FOLLOWS, UON:
- A. GRADE BEAM / WALL (TOP HORIZONTAL REINFORCEMENT): AT CENTER OF SPAN
- B. GRADE BEAM / WALL (BOTTOM HORIZONTAL REINFORCEMENT): AT SUPPORTS
- C. WALL INSIDE FACE (VERTICAL REINFORCEMENT): AT SUPPORT
- D. WALL OUTSIDE FACE (VERTICAL REINFORCEMENT): AT STORY MIDHEIGHT OF WALL FOR BELOW GRADE FOUNDATION WALLS, AT SUPPORT FOR OTHER WALLS
- E. UNLESS OTHERWISE NOTED TERMINATE BARS AT DISCONTINUOUS ENDS WITH S TANDARD HOOKS.

RE-12 PROVIDE EPOXY COATED REINFORCEMENT AND ACCESSORIES IN AREAS OF DIRECT EXPOSURE TO THE ENVIRONMENT, CHEMICALS, OR DE-ICING FOR THE AREAS INDICATED ON THE DRAWINGS.

CJ CONCRETE CONSTRUCTION JOINTS

CJ-1 PROVIDE CONSTRUCTION JOINTS IN ACCORDANCE WITH ACI-318. SUBMIT SHOP DRAWINGS SHOWING PROPOSED CONSTRUCTION JOINT LOCATIONS, DETAILS AND THE PLACEMENT SEQUENCE FOR THE SER'S APPROVAL PRIOR TO PROCEEDING WITH WORK.

CJ-2 UNLESS SPECIFICALLY SHOWN ON THE DRAWINGS, HORIZONTAL CONSTRUCTION JOINTS SHALL NOT BE PERMITTED IN FOOTINGS, PILE CAPS, MAT FOUNDATIONS, GRADE BEAMS, BEAMS, UPTURNED BEAMS, SLABS, AND WALLS WITHOUT PRIOR WRITTEN APPROVAL FROM THE SER BEFORE CONSTRUCTION.

CJ-3 PLACE VERTICAL CONSTRUCTION JOINTS TO PROVIDE A 60 FT MAXIMUM LENGTH OF CONCRETE PLACEMENT AND LOCATE AS FOLLOWS:
- A. FOUNDATION WALLS: MINIMUM OF 8 FT FROM ANY WALL INTERSECTION, PILASTER, PIER, OR WALL OPENING
- B. BEAMS AND GRADE BEAMS: WITHIN THE MIDDLE THIRD OF THE CLEAR SPAN AVOIDING LAP SPLICES, SUBJECT TO EOR APPROVAL.

CJ-4 PROVIDE CONTINUOUS WATERSTOPS AT ALL CONSTRUCTION JOINTS EXPOSED TO SOIL OR WATER, AS DESCRIBED IN THE SPECIFICATIONS AND WHERE INDICATED IN THE ARCHITECTURAL DOCUMENTS.

MA MASONRY

MA-1 LOAD BEARING, NON-LOAD BEARING, AND BACKUP WALL CONCRETE MASONRY CONSTRUCTION SHALL CONFORM TO THE FOLLOWING MATERIAL STANDARDS:

CONCRETE BLOCK:	ASTM C90, LIGHTWEIGHT (105 PCF) (MINIMUM 28 DAY COMPRESSIVE STRENGTH 1900 PSI FOR S OR M OR 2150 PSI FOR N)
MORTAR:	ASTM C270, TYPE S, M OR N PORTLAND CEMENT / LIME ONLY BY PROPORTION
MORTAR USAGE (UON ON DRAWINGS):	USE TYPE S OR M MORTAR WHEN MASONRY IS IN DIRECT CONTACT WITH SOIL; USE TYPE S MORTAR FOR ALL EXTERIOR AND INTERIOR LOAD-BEARING WALLS; USE TYPE N MORTAR FOR ALL EXTERIOR AND INTERIOR NON-LOAD-BEARING WALLS
GROUT:	ASTM C476 BY PROPORTION (MINIMUM 28 DAY COMPRESSIVE STRENGTH 2000 PSI)
REINFORCEMENT:	ASTM A615, GRADE 60
JOINT REINFORCEMENT:	ASTM A1064, TRUSS OR LADDER TYPE
EXTERIOR JT REINF:	GALVANIZE PER ASTM A153
INTERIOR JT REINF: TYPICAL	GALVANIZE PER ASTM A641
RELATIVE HUMIDITY >75%	GALVANIZE PER ASTM A153
ADHESIVE ANCHORS:	HILTI HIT-HY 70

MA-2 THE MINIMUM COMPRESSIVE STRENGTH OF THE MASONRY (f' m) SHALL BE 1,500 PSI UON, VERIFIED BY THE UNIT STRENGTH METHOD IN ACCORDANCE WITH THE ABOVE REFERENCED SPECIFICATIONS

MA-3 CALCIUM CHLORIDE SHALL NOT BE USED IN MORTAR OR GROUT.

MA-4 PROVIDE FULL FACE SHELL MORTAR COVERAGE ON MASONRY UNIT HORIZONTAL AND VERTICAL (BED AND HEAD) FACE SHELL JOINTS.

MA-5 PROVIDE FULL MORTAR COVERAGE ON WEBS AROUND ALL GROUTED CELLS.

MA-6 LAY MASONRY UNITS IN RUNNING BOND UON WITH UNITS DESIGNED TO ALIGN WITH WEBS IN EACH COURSE.

MA-7 REFER TO PLANS AND DETAILS FOR BONDED JOINT REQUIREMENTS AT WALL CORNERS AND INTERSECTIONS. WHERE INDICATED ON DRAWINGS, INTERLOCK WALLS WITH METAL TIES, ANCHORS OR PREFABRICATED JOINT REINFORCEMENT UON ON DRAWINGS OR IN SPECIFICATIONS.

MA-8 GROUT SOLID CELLS WITH REINFORCEMENT. GROUT SOLID CELLS IN BELOW GRADE CONSTRUCTION WHERE MASONRY IS IN CONTACT WITH SOIL.

MA-9 GROUT MINIMUM OF ONE (1) CELL WITH REINFORCEMENT AT EACH SIDE OF ALL OPENINGS. SEE DRAWINGS FOR ADDITIONAL REINFORCEMENT REQUIREMENTS.

MA-10 WHERE STRAP ANCHORS ARE REQUIRED BY DRAWINGS OR SPECIFICATIONS, LOCATE THEM AT DIFFERENT BED JOINTS THAN THOSE RECEIVING HORIZONTAL JOINT REINFORCEMENT.

MA-11 WHERE REQUIRED, LAP HORIZONTAL JOINT REINFORCEMENT BY AT LEAST 6 INCHES.

MA-12 PLACE GROUT BY THE LOW-LIFT METHOD. MAXIMUM GROUT POUR SHALL BE 4 FEET.

SI SPECIAL INSPECTIONS

SI-1 THE FOLLOWING STRUCTURAL ITEMS REQUIRE SPECIAL TESTING AND/OR INSPECTIONS:

CONCRETE – CAST-IN-PLACE	(BC 1704.4)
MASONRY	(BC 1704.5)
POST-INSTALLED ANCHORS	(BB# 2014-018, 2014-019, BC 1704.32)
CONCRETE DESIGN MIX	(BC 1905.3, BC 1913.5)
CONCRETE SAMPLING AND TESTING	(BC 1905.6, BC 1913.10)

PA POST-INSTALLED ANCHORS

PA-1 ADHESIVE ANCHOR SYSTEMS USED FOR DESIGN:

ADHESIVE: HILTI HIT-HY 200

THREADED ROD: HILTI HIT-Z

OVERHEAD AND/OR CONSTANT TENSION ADHESIVE ANCHOR INSTALLATIONS NOT SHOWN ON THE DRAWINGS SHALL NOT BE PERMITTED UNLESS EACH CONDITION IS REVIEWED AND APPROVED IN WRITING BY THE SER.

PA-2 PROOF TESTING OF ADHESIVE ANCHORS SHALL BE PERFORMED IN ACCORDANCE WITH THE PROJECT SPECIFICATIONS. UNLESS NOTED OTHERWISE, ADHESIVE ANCHOR PROOF TENSION LOADS SHALL BE PER THE ADHESIVE ANCHOR PROOF SCHEDULES.

PA-3 FIELD DRILLED EXPANSION ANCHOR SYSTEMS USED FOR DESIGN:

HILTI KWIK BOLT TZ

PA-4 PROOF TESTING OF EXPANSION ANCHORS SHALL BE PERFORMED IN ACCORDANCE WITH THE PROJECT SPECIFICATIONS. UNLESS NOTED OTHERWISE, EXPANSION ANCHOR PROOF TORQUE LOADS SHALL BE PER THE EXPANSION ANCHOR PROOF SCHEDULES.

PA-5 FIELD DRILLED THREADED SCREW ANCHOR SYSTEMS USED FOR DESIGN:

HILTI HUS-EZ

PA-6 ALTERNATIVE SYSTEM EQUIVALENT TO OR EXCEEDING THE PROPERTIES OF THE SYSTEMS ABOVE WILL BE CONSIDERED AS A SUBSTITUTION REQUEST. SEE PROJECT SPECIFICATIONS.

PA-7 ANCHORS ARE TO BE MINIMUM 3/4" DIAMETER WITH A MINIMUM EMBEDMENT OF 6", UON.

PA-8 INSTALL ANCHORS TO MEET THE REQUIREMENTS INDICATED IN THE CONTRACT DOCUMENTS AND THE CURRENT MANUFACTURER'S PUBLISHED INSTALLATION INSTRUCTIONS (MPII).

PA-9 LOCATE, BY NON-DESTRUCTIVE MEANS, AND AVOID ALL EXISTING REINFORCEMENT PRIOR TO INSTALLATION OF ANCHORS. IF EXISTING REINFORCING LAYOUT PROHIBITS THE INSTALLATION OF ANCHORS AS INDICATED ON THE DRAWINGS, THE CONTRACTOR SHALL IMMEDIATELY NOTIFY THE DESIGN PROFESSIONALS.

PA-10 INSTALL MASONRY ANCHORS IN SOLID MASONRY OR IN HOLLOW MASONRY THAT HAS BEEN GROUTED SOLID AT LEAST ONE COURSE ABOVE TO ONE COURSE BELOW THE ANCHOR, UON.

PA-11 SEE PROJECT SPECIFICATIONS FOR POST-INSTALLED ANCHOR INSPECTION REQUIREMENTS

SY SURVEYS

SY-1 SURVEY OF FLAT PLATE OR FLAT SLAB CONCRETE FLOORS CONSTRUCTION: SEE DETAIL NOTES AND DRAWINGS.

SF SURVEY OF FLAT PLATE CONCRETE FLOORS

SF-1 SURVEY OF FLAT PLATE OR FLAT SLAB CONCRETE FLOORS DURING CONSTRUCTION, FOR BUILDINGS WITH FOUR FLOORS OR MORE:
- A. SUBMIT A SURVEYING PLAN FOR INFORMATION 30 DAYS PRIOR TO THE START OF THE FIRST FLAT PLATE/SLAB FLOOR CONSTRUCTION.
- B. SUBMIT ELEVATION SURVEYS FOR RECORD AT FLOORS 1THROUGH ROOF IMMEDIATELY UPON COMPLETION OF SURVEYS AT THE FOLLOWING STAGES. ALL SURVEYS ARE TO THE BOTTOM OF THE SLAB:
  1. PRIOR TO THE PLACEMENT OF CONCRETE
  2. WITHIN ONE DAY OF PLACEMENT
  3. AT STRIPPING OF SHORING, PRIOR TO INSTALLATION OF RESHORING
  4. IMMEDIATELY AFTER ALL RESHORING HAS BEEN REMOVED FROM ABOVE AND BELOW THE SLAB
- C. PROVIDE ELEVATION SURVEYS AT ADDITIONAL FLOORS BASED ON THE DESIGN TEAM'S EVALUATION OF THE INITIAL SURVEY RESULTS.
- D. FOR EACH SURVEY PROVIDE MEASUREMENTS AT THE FOLLOWING POINTS:
  1. EACH COLUMN
  2. EACH WALL AT INTERSECTION WITH COLUMN LINES
  3. EACH POINT DESIGNATED BY DRAWINGS WITH A CAMBER
  4. ALONG THE PERIMETER, MIDSPAN OF EACH BAY
  5. ALONG THE GRID LINES, MIDSPAN OF EACH BAY
  6. CENTER OF EACH BAY
- E. BASED ON THE REVIEW OF SURVEY RESULTS, THE SER MAY MODIFY DESIGN CAMBER VALUES AND/OR COMMENT ON CONSTRUCTION METHODS (RESHORING, SEQUENCING, ETC.)

NOTES FOR COST ESTIMATION

COST ESTIMATION SHALL INCLUDE ADD/DEDUCT UNIT PRICES FOR EACH OF THE ITEMS LISTED.

THIS MATERIAL SHALL BE IN ADDITION TO THAT INDICATED ON THE CONTRACT DOCUMENTS, UNLESS OTHERWISE NOTED. THE ESTIMATION SHALL PROVIDE FOR THE DETAILING, FABRICATION, DELIVERY, AND INSTALLATION OF THE MATERIAL IN THE BUILDING IN SUCH SIZES AND FORMS AS THE DESIGN PROFESSIONALS MAY DIRECT.

THE ESTIMATION SHALL INCLUDE THE FOLLOWING ITEMS:

FOUNDATIONS:

ISOLATED FOOTINGS	SEE PLAN FOR SIZE & SCHEDULE FOR REINF.
MAT FOUNDATIONS	SEE FO-201 TO FO-202 FOR SIZE & REINF.
FOUNDATION WALLS	SEE PLAN FOR WALL TYPE AND EXTENT, SEE SCHED FOR TYPICAL REINFORCEMENT
SLAB ON GRADE	SEE PLAN FOR EXTENT

COLUMN REINFORCEMENT:
SEE COLUMN SCHEDULE ON S-400 TO S-401

SHEAR WALL REINFORCEMENT:
SEE SCHEDULE ON S-300 FOR REINFORCEMENT

SLAB REINFORCEMENT:
SLAB REINFORCEMENT ESTIMATIONS SHALL BE BASED ON THE FOLLOWING VALUES. REINFORCEMENT ON PLANS SHALL NOT BE USED FOR COST ESTIMATION PURPOSES.

8" CIP CONCRETE SLABS	5 PSF REINFORCING BARS
12" CIP CONCRETE SLABS	8 PSF REINFORCING BARS

BEAMS:

CIP TRANSFER BEAMS	SEE PLAN FOR EXTENT & SCHEUDLE FOR SIZE, 300 PLF REINFORCING BARS

THE COST ESTIMATION SHALL ALSO INCLUDE AN ALLOWANCE FOR THE FOLLOWING ITEMS NOT YET CAPTURED IN THE DRAWINGS:
- A. STRUCTURAL STEEL CANOPIES
- B. STEEL FRAMING AT 14TH FLOOR TERRACE
- C. SCREENWALLS
- D. DUNNAGES
- E. PIPE GIRD FOR SOLAR VOLTAIC PANELS

Client:
RANGER PROPERTIES
4790 BROADWAY
NEW YORK, NY 10034

Architect / Engineer:
FOGARTY FINGER architecture | interiors
69 Walker St, New York, NY 10013
t 212 966 7450 f 212 966 7444

Library Architect:
Andrew Berman Architect, PLLC
77 Chambers Street, 4th Floor
New York, NY 10007
Tel 212.226.5998

Structural:
Thornton Tomasetti
51 Madison Avenue
New York, NY 10010
Tel 917.661.7800

MEP / FP:
Concessi Engineering, PC
499 7th Avenue, 11th Floor South Tower
New York, NY 10018
Tel 212.629.6810

FACADE:
SIMPSON GUMPERTZ & HEGER
550 7th Avenue, 10th Floor
New York, NY 10018
Tel 212.271.7000

CODE:
METROPOLIS
22 Courtland Street, 10th Floor
New York, NY 10007
Tel 212.233.6344

No.	Date	Issue
2	DD ESTIMATING	02.06.2019
1	SCHEMATIC DESIGN	11.20.2018

Project:
4790 BROADWAY
NEW YORK, NY 10034

Drawing Title:
GENERAL NOTES-II

Seal & Signature:

DATE (MM-DD-YY):	02/06/19
PROJECT No.:	N18168.00
DRAWING BY:	AP
CHK BY:	SB
DWG. No.:	S-002.00
CADD FILE No.:	

C:\Scratch\N18168.00_4790 BROADWAY_R19_CWard.rvt

ADHESIVE ANCHOR PROOF LOAD SCHEDULE

A615 GR 60 REINFORCEMENT IN NORMAL WEIGHT CONCRETE (3000 PSI MIN)

BAR SIZE	EMBEDMENT (IN)	TENSION TEST VALUE (LBS)		
		HILTI HIT-HY 200	HILTI HIT-RE 500-SD	SIMPSON SET-XP
#4	4	6010	6150	5690
#5	5	9940	9330	7640
#6	6	13660	12860	9770
#7	7	15750	13550	12250
#8	8	20670	16540	15430
#9	9	26270	19580	NA
#10	10	32500	22060	24100

ADHESIVE ANCHOR PROOF LOAD SCHEDULE

A193 B7 THREADED ROD IN NORMAL WEIGHT CONCRETE (3000 PSI MIN)

THREADED ROD DIAMETER (IN)	EMBEDMENT (IN)	TENSION TEST VALUE (LBS)		
		HILTI HIT-HY 200	HILTI HIT-RE 500-SD	SIMPSON SET-XP
3/8	3	3360	3510	3620
1/2	4	6010	6150	5690
5/8	5	9440	9330	7640
3/4	6	7120	12860	9770
7/8	7	15750	13620	12250
1	8	20670	16440	15430
1-1/4	10	32500	22060	24100

TENSION PROOF LOAD NOTES:

1. PROOF TESTING OF REINFORCEMENT FOR CONCRETE HOUSEKEEPING PADS IS NOT REQUIRED.
2. SEE PROJECT SPECIFICATIONS FOR ADDITIONAL INFORMATION REGARDING PROOF TESTING OF ADHESIVE ANCHORS.

EXPANSION ANCHOR PROOF LOAD SCHEDULE

ANCHORS IN NORMAL WEIGHT CONCRETE (3000 PSI MINIMUM)

ANCHOR DIAMETER (IN)	TORQUE TEST VALUE (FT-LBS)	
	HILTI KWIK BOLT TZ	SIMPSON STRONG-BOLT 2
3/8	25	30
1/2	40	60
5/8	60	90
3/4	110	150

EXPANSION ANCHOR PROOF LOAD SCHEDULE

ANCHORS IN LIGHTWEIGHT CONCRETE (3000 PSI MINIMUM)

ANCHOR DIAMETER (IN)	TORQUE TEST VALUE (FT-LBS)	
	HILTI KWIK BOLT TZ	SIMPSON STRONG-BOLT 2
3/8	25	30
1/2	40	60
5/8	60	90
3/4	NA	150

TORQUE PROOF LOAD NOTES:

1. SEE PROJECT SPECIFICATIONS FOR ADDITIONAL INFORMATION REGARDING PROOF TESTING OF EXPANSION ANCHORS.

ABBREVIATION	DESCRIPTION
ADDL	ADDITIONAL
ADJ	ADJACENT
ALT	ALTERNATE
APPRX	APPROXIMATE
ARCH	ARCHITECT OR ARCHITECTURAL
B/	BOTTOM OF
B/B	BACK TO BACK
BAL	BALANCE
BLDG	BUILDING
BLK	BLOCK
BLKG	BLOCKING
BM	BEAM
BOT	BOTTOM
BRDG	BRIDGING
BRG	BEARING
BTWN	BETWEEN
C	COMPRESSION
C/C	CENTER TO CENTER
CIP	CAST-IN-PLACE
CL	CENTER LINE
CLR	CLEAR OR CLEARANCE
CMU	CONCRETE MASONRY UNIT
COL	COLUMN
COMP	COMPRESSION
CONC	CONCRETE
CONN	CONNECTION(S)
CONST	CONSTRUCTION
CONT	CONTINUOUS
db	REINFORCING BAR DIAMETER
DBL	DOUBLE
DCW	DEMAND CRITICAL WELD
DEG	DEGREE(S)
DET	DETAIL
DIA	DIAMETER
DIAG	DIAGONAL
DIM(S)	DIMENSION(S)
DL	DEAD LOAD
DWG(S)	DRAWING(S)
DWL	DOWEL(S)
EA	EACH
ECC	ECCENTRICITY
EF	EACH FACE
EL	ELEVATION
ELEC	ELECTRICAL
ENGR	ENGINEER
EOD	EDGE OF DECK
EOS	EDGE OF SLAB
EQ	EQUAL
EQUIP	EQUIPMENT
EW	EACH WAY
EXP	EXPANSION
EXST	EXISTING
EXT	EXTERIOR
F/F	FACE TO FACE
FIN	FINISH(ED)
FLR	FLOOR
FND	FOUNDATION
FP	FIREPROOF(ING)
FS	FAR SIDE
FTG	FOOTING
GA	GAGE, GAUGE
GALV	GALVANIZED
GB	GRADE BEAM
GEN	GENERAL
GR	GRADE
HK	HOOK
HORIZ	HORIZONTAL
HP	HIGH POINT
HT	HEIGHT
ID	INSIDE DIAMETER
IF	INSIDE FACE
INFO	INFORMATION
INT	INTERIOR
INTRM	INTERMEDIATE
JST(S)	JOIST(S)
JT	JOINT
K	KIPS (1,000 POUNDS)
KLF	KIP PER LINEAR FOOT
KSF	KIP PER SQUARE FOOT
LL	LIVE LOAD
LLH	LONG LEG HORIZONTAL
LLV	LONG LEG VERTICAL

ABBREVIATION	DESCRIPTION
LONG	LONGITUDINAL
LP	LOW POINT
LW	LIGHTWEIGHT
LWC	LIGHTWEIGHT CONCRETE
M	MOMENT
MATL	MATERIAL
MAX	MAXIMUM
MC	MOMENT CONNECTION(S)
MECH	MECHANICAL
MEP	MECHANICAL, ELECTRICAL, PLUMBING, FIRE PROTECTION
MEZZ	MEZZANINE
MFR	MANUFACTURER
MID	MIDDLE
MIN	MINIMUM
MISC	MISCELLANEOUS
NIC	NOT IN CONTRACT
NO	NUMBER
NOM	NOMINAL
NS	NEAR SIDE
NTS	NOT TO SCALE
NW	NORMAL WEIGHT
NWC	NORMALWEIGHT CONCRETE
OC	ON CENTER
OD	OUTSIDE DIAMETER
OF	OUTSIDE FACE
OH	OPPOSITE HAND
OPNG(S)	OPENING(S)
OPP	OPPOSITE
OSL	OUTSTANDING LEG
PC	PIECE
PCY	POUNDS PER CUBIC YARD
PERP	PERPENDICULAR
PG	PLATE GIRDER
PL	PLATE
PRC	PRECAST
PRLL	PARALLEL
PSF	POUNDS PER SQUARE FOOT
PSI	POUNDS PER SQUARE INCH
PT	POINT OR POST-TENSION(ED) OR (ING)
RAD	RADIUS
REF	REFERENCE
REINF	REINFORCE(D) (ING) OR (MENT)
REQD	REQUIRED
S&T	SHRINKAGE AND TEMPERATURE
SCHED	SCHEDULE(D)
SDL	SUPERIMPOSED DEAD LOAD
SECT	SECTION
SER	STRUCTURAL ENGINEER OF RECORD
SF	SQUARE FOOT (FEET)
SHT	SHEET
SIM	SIMILAR
SLRS	SEISMIC LOAD RESISTING SYSTEM
SOG	SLAB ON GRADE
SP	SPACE
SPEC(S)	SPECIFICATION(S)
STD	STANDARD
STL	STEEL
STR	STRUCTURE
STRCTL	STRUCTURAL
SYM	SYMMETRICAL
T	TENSION
T&B	TOP AND BOTTOM
T/	TOP OF
TEMP	TEMPERATURE OR TEMPORARY
TEN	TENSION
THK	THICK OR THICKNESS
TYP	TYPICAL
UON	UNLESS OTHERWISE NOTED
V	SHEAR
VERT	VERTICAL
VIF	VERIFY IN FIELD
W/	WITH
W/O	WITHOUT
WD	WOOD
WP	WORK POINT
WPFG	WATERPROOFING
WS	WATERSTOP
WWR	WELDED WIRE REINFORCEMENT

Client:

RANGER PROPERTIES
4790 BROADWAY
NEW YORK, NY 10034

Architect / Engineer:

FOGARTY FINGER architecture | interiors
69 Walker St, New York, NY 10013
t 212 966 7450 f 212 966 7444

Library Architect:

Andrew Berman Architect, PLLC
77 Chambers Street, 4th Floor
New York, NY 10007
Tel 212.226.5998

Structural:

Thornton Tomasetti
51 Madison Avenue
New York, NY 10010
Tel 917.661.7800

MEP / FP:

Concessi Engineering, PC
499 7th Avenue, 11th Floor South Tower
New York, NY 10018
Tel 212.629.6810

FACADE:

SIMPSON GUMPERTZ & HEGER
550 7th Avenue, 10th Floor
New York, NY 10018
Tel 212.271.7000

CODE:

METROPOLIS
22 Courtland Street, 10th Floor
New York, NY 10007
Tel 212.233.6344

No.	Date	Issue
2	DD ESTIMATING	02.06.2019
1	SCHEMATIC DESIGN	11.20.2018

Project:

4790 BROADWAY
NEW YORK, NY 10034

Drawing Title:

GENERAL NOTES-III

Seal & Signature:

DATE (MM-DD-YY): 02/06/19
PROJECT No.: N18168.00
DRAWING BY: AP
CHK BY: SB
DWG. No.: S-003.00
CADD FILE No.:

C:\Scratch\N18168.00_4790 BROADWAY_R19_CWest.rvt

SLAB/SLAB-ON-GRADE REINFORCEMENT LAP SPLICE LENGTH SCHEDULE (INCHES)

SEE NOTE 5

BAR SIZE	MINIMUM BAR SPACING (INCHES)	TENSION (LTS)					
		f'c = 3 KSI	f'c = 4 KSI	f'c = 5 KSI	f'c = 6 KSI	f'c = 7 KSI	f'c = 8 KSI
#4	5.500	22	19	17	16	14	14
#5	5.375	32	28	25	23	21	20
#6	5.250	43	37	34	31	28	27
#7	5.125	69	60	54	49	46	43
#8	5.000	86	74	67	61	56	53

DEVELOPMENT LENGTH SCHEDULE (INCHES)

SEE NOTE 5

BAR SIZE	MINIMUM BAR SPACING (INCHES) [MAX(1",db) + db] NOTE 2	TENSION																				COMPRESSION									
		NOTED AS Ld ON DRAWINGS										NOTED AS Ldh ON DRAWINGS										NOTED AS Ldc ON DRAWINGS									
		f'c (PSI)										f'c (PSI)										f'c (PSI)									
		3000	4000	5000	6000	7000	8000	9000	10,000	11,000	12,000	3000	4000	5000	6000	7000	8000	9000	10,000	11,000	12,000	3000	4000	5000	6000	7000	8000	9000	10,000	11,000	12,000
#4	1.500	22	19	17	16	15	14	13	12	12	12	11	10	9	8	8	7	7	6	6	6	11	10	9	9	9	9	9	9	9	9
#5	1.625	28	24	22	20	18	17	16	15	15	15	14	12	11	10	9	9	8	8	8	8	14	12	12	12	12	12	12	12	12	12
#6	1.750	33	29	26	24	22	21	19	18	18	18	17	15	13	12	11	11	10	9	9	9	17	15	14	14	14	14	14	14	14	14
#7	1.875	48	42	38	34	32	30	28	27	27	27	20	17	15	14	13	12	12	11	11	11	20	17	16	16	16	16	16	16	16	16
#8	2.000	55	48	43	39	36	34	32	30	30	30	22	19	17	16	15	14	13	12	12	12	22	19	18	18	18	18	18	18	18	18
#9	2.375	62	54	48	44	41	38	36	34	34	34	25	22	20	18	17	16	15	14	14	14	25	22	21	21	21	21	21	21	21	21
#10	2.625	70	61	54	50	46	43	41	39	39	39	28	25	22	20	19	18	17	16	16	16	28	25	23	23	23	23	23	23	23	23
#11	2.875	78	67	60	55	51	48	45	43	43	43	31	27	24	22	21	19	18	17	17	17	31	27	26	26	26	26	26	26	26	26

DEVELOPMENT LENGTH SCHEDULE NOTES:

1. WHERE MORE THAN 12 INCHES OF FRESH CONCRETE IS CAST BELOW THE DEVELOPMENT LENGTH, MULTIPLY Ld BY 1.3.
2. WHERE STIRRUPS OR TIES ARE NOT PRESENT THROUGHOUT Ld, MINIMUM BAR SPACING MUST BE INCREASED TO [MAX(1", db) + 2db] FOR SCHEDULED VALUES TO BE APPLICABLE.

COLUMN REINFORCEMENT LAP SPLICE LENGTH SCHEDULE (INCHES)

SEE NOTE 5

BAR SIZE	MINIMUM BAR SPACING (INCHES)	TENSION (LTS)									COMPRESSION (LCS)
		f'c = 4 KSI	f'c = 5 KSI	f'c = 6 KSI	f'c = 7 KSI	f'c = 8 KSI	f'c = 9 KSI	f'c = 10 KSI	f'c = 11 KSI	f'c = 12 KSI	
#5	2.125	28	25	23	21	20	19	18	18	18	19
#6	2.250	37	34	31	28	27	25	24	24	24	23
#7	2.375	54	49	45	41	39	36	35	35	35	27
#8	2.500	62	56	51	47	44	42	39	39	39	30
#9	2.875	70	63	57	53	50	47	44	44	44	34
#10	3.250	79	71	64	60	56	53	50	50	50	39
#11	3.625	87	78	71	66	62	58	55	55	55	43

GRADE BEAM/BEAM REINFORCEMENT LAP SPLICE LENGTH SCHEDULE (INCHES)

SEE NOTE 5

BAR SIZE	MINIMUM BAR SPACING (INCHES)	TENSION (LTS)													
		f'c = 4 KSI		f'c = 5 KSI		f'c = 6 KSI		f'c = 7 KSI		f'c = 8 KSI		f'c = 9 KSI		f'c = 10 KSI	
		TOP BARS	OTHER	TOP BARS	OTHER	TOP BARS	OTHER	TOP BARS	OTHER	TOP BARS	OTHER	TOP BARS	OTHER	TOP BARS	OTHER
#4	1.500	33	25	29	23	27	21	25	19	23	18	22	17	21	16
#5	1.625	41	31	36	28	33	26	31	24	29	22	27	21	26	20
#6	1.750	49	37	44	34	40	31	37	28	35	27	33	25	31	24
#7	1.875	71	54	63	49	58	45	54	41	50	39	47	36	45	35
#8	2.000	81	62	72	56	66	51	61	47	57	44	54	42	51	39
#9	2.375	91	70	81	63	74	57	69	53	64	50	61	47	58	44
#10	2.625	102	79	92	71	84	64	77	60	72	56	68	53	65	50
#11	2.875	114	87	102	78	93	71	86	66	80	62	76	58	72	55

FOOTING/MAT REINFORCEMENT LAP SPLICE LENGTH SCHEDULE (INCHES)

SEE NOTE 5

BAR SIZE	MINIMUM BAR SPACING (INCHES)	TENSION LAP (LTS)													
		f'c = 4 KSI		f'c = 5 KSI		f'c = 6 KSI		f'c = 7 KSI		f'c = 8 KSI		f'c = 9 KSI		f'c = 10 KSI	
		TOP BARS	OTHER	TOP BARS	OTHER	TOP BARS	OTHER	TOP BARS	OTHER	TOP BARS	OTHER	TOP BARS	OTHER	TOP BARS	OTHER
#4	5.500	20	15	18	14	16	13	15	12	14	12	13	12	13	12
#5	5.375	25	19	22	17	20	16	19	14	18	14	17	13	16	12
#6	5.250	29	23	26	20	24	19	22	17	21	16	20	15	19	15
#7	5.125	43	33	38	29	35	27	32	25	30	23	29	22	27	21
#8	5.000	49	37	44	34	40	31	37	28	35	27	33	25	31	24
#9	4.875	63	49	57	44	52	40	48	37	45	35	42	33	40	31
#10	4.750	82	63	74	57	67	52	62	48	58	45	55	42	52	40
#11	4.625	104	80	93	72	85	65	79	61	74	57	69	54	66	51

LAP SPLICE NOTES:

1. TABULATED VALUES ARE PER ACI 318-11 REQUIREMENTS FOR NORMALWEIGHT CONCRETE. THE VALUES ON THIS SHEET DO NOT APPLY TO LIGHTWEIGHT CONCRETE.
2. SEE TYPICAL DETAILS FOR CLEAR COVER.
3. MINIMUM BAR SPACING DIAGRAM - "S"

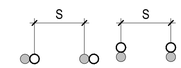

FIRST BAR
SECOND BAR PLACED OR SPLICE BAR

4. WHERE ACTUAL CONDITIONS DIFFER FROM THE CLEAR COVER SHOWN ON THE TYPICAL DETAILS OR DIFFER FROM PROVIDED SCHEDULED BAR SIZE, MINIMUM SPACING AND/OR f'c, LENGTHS SHALL BE ADJUSTED ONLY WITH THE APPROVAL OF THE STRUCTURAL ENGINEER OF RECORD.
5. TABULATED VALUES ARE FOR NON-EPOXY COATED, GRADE 60 REINFORCEMENT IN NORMALWEIGHT CONCRETE.

   FOR EPOXY COATED REINFORCEMENT:
   MULTIPLY Ld BY 1.5
   MULTIPLY Ldh BY 1.2
   Ldc IS NOT AFFECTED
   MULTIPLY LTS BY 1.3 FOR "TOP BARS"
   MULTIPLY LTS BY 1.5 FOR ALL OTHER REINFORCEMENT

   FOR GRADE 75 REINFORCEMENT:
   MULTIPLY Ld, Ldh, Ldc, AND LTS BY 1.25
   MULTIPLY Lcs BY 1.45
6. WHERE BARS OF DIFFERENT SIZES ARE LAP SPLICED IN TENSION, THE TENSION LAP SPLICE LENGTH (LTS) SHALL BE THE LARGER OF THE TENSION DEVELOPMENT LENGTH (Ld) OF THE LARGER BAR AND THE TENSION LAP SPLICE LENGTH OF THE SMALLER BAR.
7. WHERE BARS OF DIFFERENT SIZES ARE LAP SPLICED IN COMPRESSION, THE COMPRESSION LAP LENGTH (LCS) SHALL BE THE LARGER OF THE COMPRESSION DEVELOPMENT LENGTH (Ldc) OF THE LARGER BAR OR THE COMPRESSION LAP SPLICE LENGTH OF THE SMALLER BAR.
8. "TOP BARS" ARE DEFINED AS HORIZONTAL REINFORCEMENT PLACED SUCH THAT MORE THAN 12 INCHES OF FRESH CONCRETE IS CAST BELOW THE DEVELOPMENT LENGTH OR SPLICE . "OTHER BARS" ARE ALL BARS FOR WHICH THIS DOES NOT APPLY.

Client:
RANGER PROPERTIES
4790 BROADWAY
NEW YORK, NY 10034

Architect / Engineer:
FOGARTY FINGER architecture | interiors
69 Walker St, New York, NY 10013
t 212 966 7450 f 212 966 7444

Library Architect:
Andrew Berman Architect, PLLC
77 Chambers Street, 4th Floor
New York, NY 10007
Tel 212.226.5998

Structural:
Thornton Tomasetti
51 Madison Avenue
New York, NY 10010
Tel 917.661.7800

MEP / FP:
Concessi Engineering, PC
499 7th Avenue, 11th Floor South Tower
New York, NY 10018
Tel 212.629.6810

FACADE:
SIMPSON GUMPERTZ & HEGER
550 7th Avenue, 10th Floor
New York, NY 10018
Tel 212.271.7000

CODE:
METROPOLIS
22 Courtland Street, 10th Floor
New York, NY 10007
Tel 212.233.6344

No.	Date	Issue
2	DD ESTIMATING	02.06.2019
1	SCHEMATIC DESIGN	11.20.2018

Project:
4790 BROADWAY
NEW YORK, NY 10034

Drawing Title:
LAP SPLICE SCHEDULES I

Seal & Signature:

DATE (MM-DD-YY): 02/06/19
PROJECT No.: N18168.00
DRAWING BY: AP
CHK BY: SB
DWG. No.: S-004.00
CADD FILE No.:

C:\Scratch\N18168.00_4790 BROADWAY_R19_CWard.rvt

SHEAR WALL REINFORCEMENT - VERTICAL BARS
LAP SPLICE LENGTH SCHEDULE (INCHES)

SEE NOTE 5

BAR SIZE	MINIMUM BAR SPACING (INCHES)	TENSION (LTS)									COMPRESSION (LCS)
		f'c = 4 KSI	f'c = 5 KSI	f'c = 6 KSI	f'c = 7 KSI	f'c = 8 KSI	f'c = 9 KSI	f'c = 10 KSI	f'c = 11 KSI	f'c = 12 KSI	
#4	5.500	15	14	13	12	12	12	12	12	12	15
#5	5.375	19	17	16	14	14	13	12	12	12	19
#6	5.250	26	23	21	20	19	18	17	17	17	23
#7	5.125	42	38	35	32	30	28	27	27	27	27
#8	5.000	53	48	44	40	38	36	34	34	34	30
#9	4.875	65	59	53	50	46	44	42	42	42	34
#10	4.750	80	71	65	60	56	53	51	51	51	39
#11	4.625	95	85	77	72	67	63	60	60	60	43

SHEAR WALL REINFORCEMENT - HORIZONTAL BARS
LAP SPLICE LENGTH SCHEDULE (INCHES)

SEE NOTE 5

BAR SIZE	MINIMUM BAR SPACING (INCHES)	TENSION (LTS)									COMPRESSION (LCS)
		f'c = 4 KSI	f'c = 5 KSI	f'c = 6 KSI	f'c = 7 KSI	f'c = 8 KSI	f'c = 9 KSI	f'c = 10 KSI	f'c = 11 KSI	f'c = 12 KSI	
#4	5.500	25	22	20	19	18	17	16	16	16	15
#5	5.375	36	32	29	27	26	24	23	23	23	19
#6	5.250	49	44	40	37	35	33	31	31	31	23
#7	5.125	78	70	64	59	55	52	50	50	50	27
#8	5.000	97	87	79	73	69	65	61	61	61	30
#9	4.875	117	105	96	89	83	78	74	74	74	34
#10	4.750	141	126	115	106	100	94	89	89	89	39
#11	4.625	165	147	135	125	117	110	104	104	104	43

FOUNDATION WALL REINFORCEMENT - VERTICAL INSIDE BARS
LAP SPLICE LENGTH SCHEDULE (INCHES)

SEE NOTE 5

BAR SIZE	MINIMUM BAR SPACING (INCHES)	TENSION (LTS)									COMPRESSION (LCS)
		f'c = 4 KSI	f'c = 5 KSI	f'c = 6 KSI	f'c = 7 KSI	f'c = 8 KSI	f'c = 9 KSI	f'c = 10 KSI	f'c = 11 KSI	f'c = 12 KSI	
#4	5.500	15	14	13	12	12	12	12	12	12	15
#5	5.375	23	20	18	17	16	15	14	14	14	19
#6	5.250	31	28	25	23	22	21	20	20	20	23
#7	5.125	50	45	41	38	35	33	32	32	32	27
#8	5.000	62	56	51	47	44	42	39	39	39	30
#9	4.875	76	68	62	57	54	51	48	48	48	34
#10	4.750	92	82	75	69	65	61	58	58	58	39
#11	4.625	108	97	89	82	77	72	69	69	69	43

FOUNDATION WALL REINFORCEMENT - HORIZONTAL INSIDE BARS
LAP SPLICE LENGTH SCHEDULE (INCHES)

SEE NOTE 5

BAR SIZE	MINIMUM BAR SPACING (INCHES)	TENSION (LTS)									COMPRESSION (LCS)
		f'c = 4 KSI	f'c = 5 KSI	f'c = 6 KSI	f'c = 7 KSI	f'c = 8 KSI	f'c = 9 KSI	f'c = 10 KSI	f'c = 11 KSI	f'c = 12 KSI	
#4	5.500	20	18	16	15	14	13	13	13	13	15
#5	5.375	25	22	20	19	18	17	16	16	16	19
#6	5.250	29	26	24	22	21	20	19	19	19	23
#7	5.125	48	43	39	36	34	32	31	31	31	27
#8	5.000	61	54	50	46	43	41	39	39	39	30
#9	4.875	75	67	61	57	53	50	47	47	47	34
#10	4.750	91	82	75	69	65	61	58	58	58	39
#11	4.625	109	97	89	82	77	73	69	69	69	43

Client:

RANGER PROPERTIES
4790 BROADWAY
NEW YORK, NY 10034

Architect / Engineer:

FOGARTY FINGER
architecture | interiors

69 Walker St, New York, NY 10013
t 212 966 7450 f 212 966 7444

Library Architect:

Andrew Berman Architect, PLLC
77 Chambers Street, 4th Floor
New York, NY 10007
Tel 212.226.5998

Structural:

Thornton Tomasetti
51 Madison Avenue
New York, NY 10010
Tel 917.661.7800

MEP / FP:

Concessi Engineering, PC
499 7th Avenue, 11th Floor South Tower
New York, NY 10018
Tel 212.629.6810

FACADE:

SIMPSON GUMPERTZ & HEGER
550 7th Avenue, 10th Floor
New York, NY 10018
Tel 212.271.7000

CODE:

METROPOLIS
22 Courtland Street, 10th Floor
New York, NY 10007
Tel 212.233.6344

No.	Date	Issue
2	DD ESTIMATING	02.06.2019
1	SCHEMATIC DESIGN	11.20.2018

Project:

4790 BROADWAY
NEW YORK, NY 10034

Drawing Title:

LAP SPLICE SCHEDULE II

Seal & Signature:

DATE (MM-DD-YY): 02/06/19
PROJECT No.: N18168.00
DRAWING BY: Author
CHK BY: Checker
DWG. No.: S-005.00
CADD FILE No.:

C:\Scratch\N18168.00_4790 BROADWAY_R19_CWest.rvt

FOUNDATION WALL REINFORCEMENT - VERTICAL OUTSIDE BARS
LAP SPLICE LENGTH SCHEDULE (INCHES)

SEE NOTE 5

BAR SIZE	MINIMUM BAR SPACING (INCHES)	TENSION (LTS)									COMPRESSION (LCS)
		f'c = 4 KSI	f'c = 5 KSI	f'c = 6 KSI	f'c = 7 KSI	f'c = 8 KSI	f'c = 9 KSI	f'c = 10 KSI	f'c = 11 KSI	f'c = 12 KSI	
#4	5.500	15	14	13	12	12	12	12	12	12	15
#5	5.375	19	17	16	14	14	13	12	12	12	19
#6	5.250	23	20	19	17	16	15	15	15	15	23
#7	5.125	33	29	27	25	23	22	21	21	21	27
#8	5.000	37	34	31	28	27	25	24	24	24	30
#9	4.875	49	44	40	37	35	33	31	31	31	34
#10	4.750	63	57	52	48	45	42	40	40	40	39
#11	4.625	80	72	65	61	57	54	51	51	51	43

FOUNDATION WALL REINFORCEMENT - HORIZONTAL OUTSIDE BARS
LAP SPLICE LENGTH SCHEDULE (INCHES)

SEE NOTE 5

BAR SIZE	MINIMUM BAR SPACING (INCHES)	TENSION (LTS)									COMPRESSION (LCS)
		f'c = 4 KSI	f'c = 5 KSI	f'c = 6 KSI	f'c = 7 KSI	f'c = 8 KSI	f'c = 9 KSI	f'c = 10 KSI	f'c = 11 KSI	f'c = 12 KSI	
#4	5.500	20	18	16	15	14	13	13	13	13	15
#5	5.375	25	22	20	19	18	17	16	16	16	19
#6	5.250	29	26	24	22	21	20	19	19	19	23
#7	5.125	43	38	35	32	30	29	27	27	27	27
#8	5.000	49	44	40	37	35	33	31	31	31	30
#9	4.875	63	57	52	48	45	42	40	40	40	34
#10	4.750	82	74	67	62	58	55	52	52	52	39
#11	4.625	104	93	85	79	74	69	66	66	66	43

Client:

RANGER PROPERTIES
4790 BROADWAY
NEW YORK, NY 10034

Architect / Engineer:

FOGARTY FINGER architecture | interiors
69 Walker St, New York, NY 10013
t 212 966 7450 f 212 966 7444

Library Architect:

Andrew Berman Architect, PLLC
77 Chambers Street, 4th Floor
New York, NY 10007
Tel 212.226.5998

Structural:

Thornton Tomasetti
51 Madison Avenue
New York, NY 10010
Tel 917.661.7800

MEP / FP:

Concessi Engineering, PC
499 7th Avenue, 11th Floor South Tower
New York, NY 10018
Tel 212.629.6810

FACADE:

SIMPSON GUMPERTZ & HEGER
550 7th Avenue, 10th Floor
New York, NY 10018
Tel 212.271.7000

CODE:

METROPOLIS
22 Courtland Street, 10th Floor
New York, NY 10007
Tel 212.233.6344

No.	Date	Issue
2	DD ESTIMATING	02.06.2019
1	SCHEMATIC DESIGN	11.20.2018

Project:

4790 BROADWAY
NEW YORK, NY 10034

Drawing Title:

LAP SPLICE SCHEDULE III

Seal & Signature:

DATE (MM-DD-YY): 02/06/19
PROJECT No.: N18168.00
DRAWING BY: Author
CHK BY: Checker
DWG. No.: S-006.00
CADD FILE No.:

C:\Scratch\N18168.00_4790 BROADWAY_R19_CWard.rvt

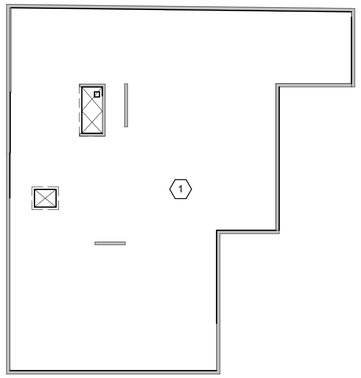

1 CELLAR FLOOR LOADS
NOT TO SCALE

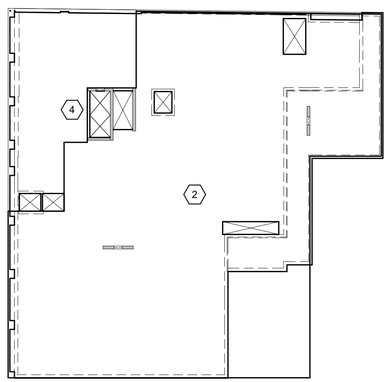

2 LEVEL 01 FLOOR LOADS
NOT TO SCALE

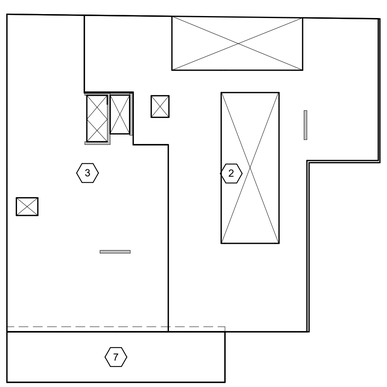

3 LEVEL 02 FLOOR LOADS
NOT TO SCALE

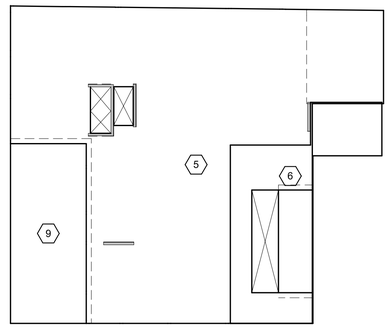

4 LEVEL 03 FLOOR LOADS
NOT TO SCALE

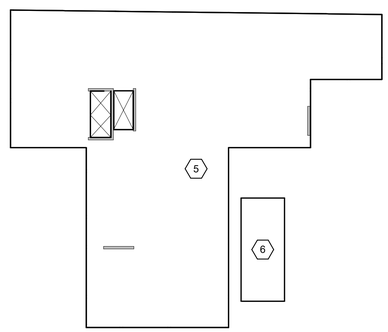

5 LEVEL 04-10 FLOOR LOADS
NOT TO SCALE

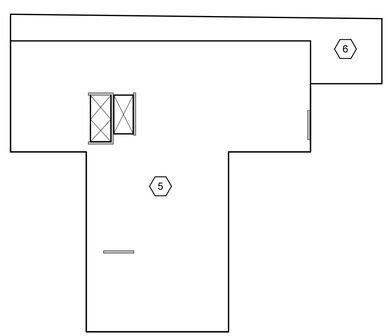

6 LEVEL 11 FLOOR LOADS
NOT TO SCALE

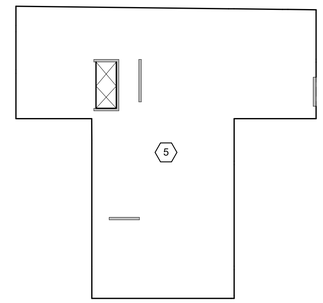

7 LEVEL 12 & 13 FLOOR LOADS
NOT TO SCALE

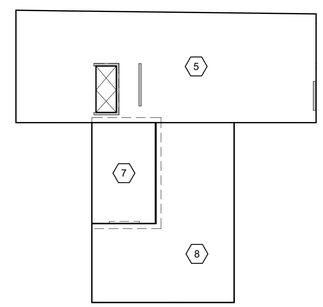

8 LEVEL 14 FLOOR LOADS
NOT TO SCALE

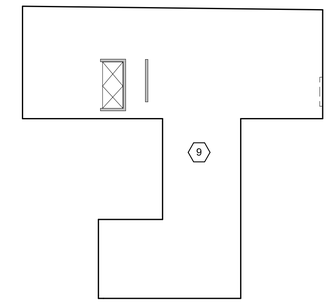

9 LEVEL 15 - BULKHEAD FLOOR LOADS
NOT TO SCALE

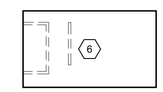

10 LEVEL 16 ROOF LOADS
NOT TO SCALE

SUPERIMPOSED DEAD AND LIVE LOAD SCHEDULE

DESCRIPTION	DESIGNATION MARK	UNFACTORED SUPERIMPOSED DEAD LOAD (PSF UON)		UNFACTORED LIVE LOAD (PSF UON)	
BACK OF HOUSE	1	10	-	100	-
LIBRARY	2	25	-	100	PUBLIC OCCUPANCY
PRE-K	3	30	-	60	-
LOBBY	4	25	-	100	PUBLIC OCCUPANCY
RESIDENTIAL	5	30	-	40	-
UNOCCUPIED ROOF	6	20	-	40	SNOW LOADING
OCCUPIED ROOF	7	50	-	100	PUBLIC OCCUPANCY
AMENITY SPACE	8	15	-	100	PUBLIC OCCUPANCY
MECHANICAL SPACE	9	50	-	150	EQUIPMENT

NOTES:

1. DESIGN LIVE LOAD INCLUDES 15 PSF PARTITION ALLOWANCE

SUPERIMPOSED DEAD AND LIVE LOAD
SCALE: 12" = 1'-0"

Client:

RANGER PROPERTIES
4790 BROADWAY
NEW YORK, NY 10034

Architect / Engineer:

FOGARTY FINGER architecture | interiors
69 Walker St, New York, NY 10013
t 212 966 7450 f 212 966 7444

Library Architect:

Andrew Berman Architect, PLLC
77 Chambers Street, 4th Floor
New York, NY 10007
Tel 212.226.5998

Structural:

Thornton Tomasetti
51 Madison Avenue
New York, NY 10010
Tel 917.661.7800

MEP / FP:

Concessi Engineering, PC
499 7th Avenue, 11th Floor South Tower
New York, NY 10018
Tel 212.629.6810

FACADE:

SIMPSON GUMPERTZ & HEGER
550 7th Avenue, 10th Floor
New York, NY 10018
Tel 212.271.7000

CODE:

METROPOLIS
22 Courtland Street, 10th Floor
New York, NY 10007
Tel 212.233.6344

No.	Date	Issue
2	DD ESTIMATING	02.06.2019
1	SCHEMATIC DESIGN	11.20.2018

Project:

4790 BROADWAY
NEW YORK, NY 10034

Drawing Title:

REFERENCE LOADING DIAGRAMS I

Seal & Signature:

DATE (MM-DD-YY): 02/06/19
PROJECT No.: N18168.00
DRAWING BY: AP
CHK BY: SB
DWG. No.: S-010.00
CADD FILE No.:

C:\Sites\N18168.00_4790 BROADWAY_R19_CV.rvt

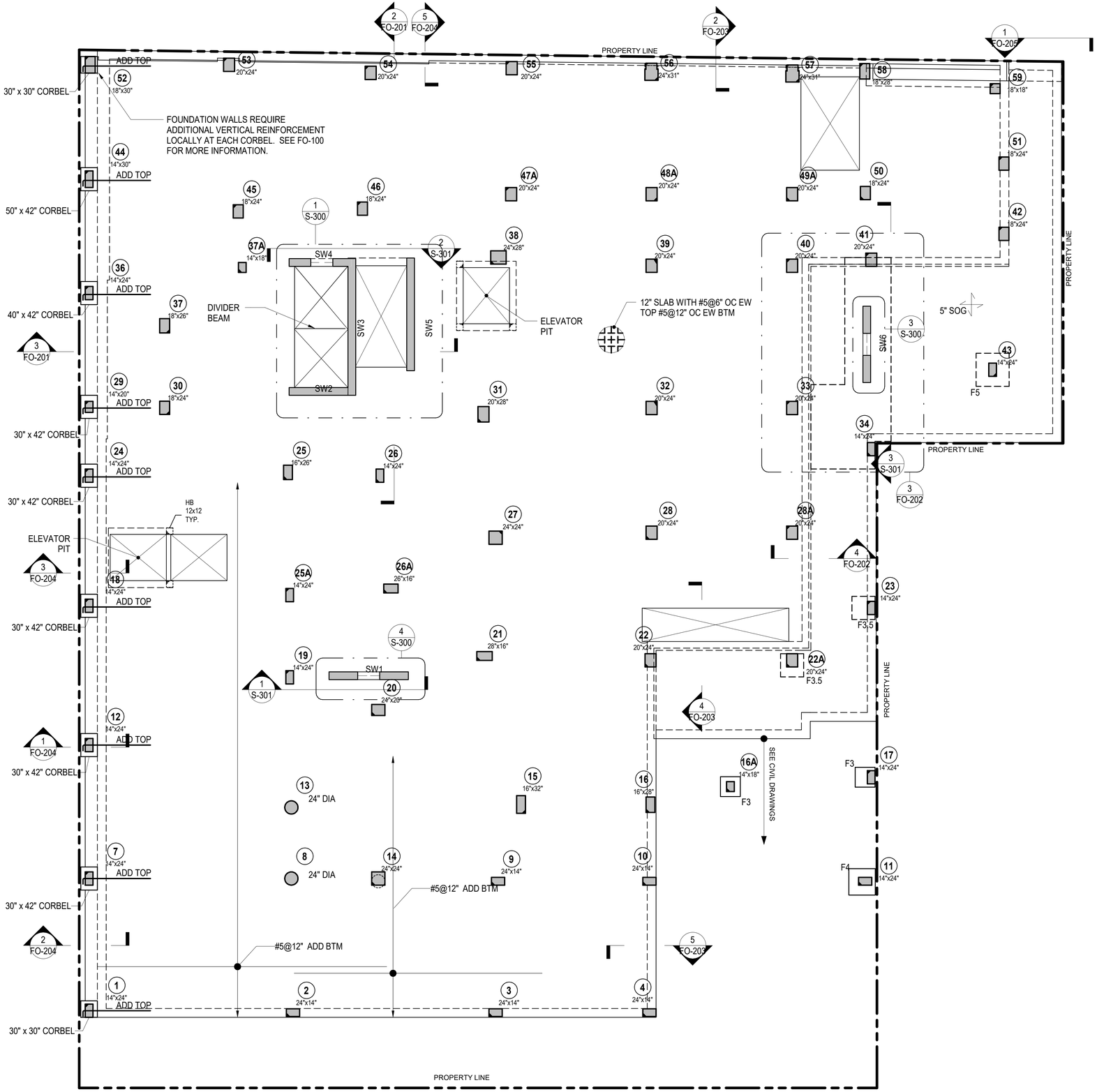

1 **LEVEL 01**
1/8" = 1'-0"

SHEET NOTES

1. TOP OF SLAB AND TOP OF BEAM EL [0' - 0"]

   UON THUS: X1 — X - INDICATES CHANGE IN STRUCTURAL SLAB ELEVATION

2. TWO-WAY SLAB BAR PLACEMENT:
   1. EAST-WEST DIRECTION OUTER LAYER
   2. NORTH-SOUTH DIRECTION INNER LAYER
3. ONE-WAY SLAB BAR PLACEMENT:
   1. TOP AND BOTTOM BARS PARALLEL TO SPAN DIRECTION
   2. SHRINKAGE AND TEMPERATURE BARS PERPENDICULAR TO SPAN DIRECTION
4. SEE TYPICAL SLAB DETAILS
5. FOR COLUMN STRIP WIDTH SEE TOP BARS LEGEND
6. FOR SLAB CORNERS SUPPORTED BY BEAMS OR WALLS, SEE TYPICAL BEAM / WALL SUPPORTED SLAB EXTERIOR CORNER DETAIL
7. SEE S-406 FOR STUD RAIL LOCATION AND SIZE
8. SYMBOLS:

XX"	XX" INDICATES THICKNESS OF TWO WAY SLAB - 8" THICK UON PROVIDE #4@12" OC BOTTOM CONTINUOUS EACH WAY 12" PROVIDE #5@12" OC BOTTOM CONTINUOUS EACH WAY SEE PLAN FOR TOP REINFORCING
SX	INDICATES ONE-WAY SLAB SPAN DIRECTION SEE ONE-WAY SCHEDULE AND ONE-WAY SLAB DETAILS
UP	INDICATES SLOPE IN TOP OF SLAB
DB	INDICATES HSS8x4x3/8 ELEVATOR DIVIDER BEAM (NOT FIREPROOFED)
CA / CB	INDICATES COLUMN ABOVE / BELOW
	INDICATES STUD RAILS ARE REQUIRED. SEE TYPICAL DETAILS.

9. SEE S-100 FOR TOP AND BOTTOM SLAB REINFORCEMENT NOTES
10. FOR ADDITIONAL INFORMATION REFER TO THE FOLLOWING DRAWINGS:

GENERAL NOTES	S0 SERIES DRAWINGS
TYPICAL FOUNDATION DETAILS	F2 SERIES DRAWINGS
LATERAL SYSTEM ELEVATIONS, CONNECTION FORCES AND DETAILS	S3 SERIES DRAWINGS
CONCRETE SUPERSTRUCTURE SCHEDULES AND DETAILS	S4 SERIES DRAWINGS
STEEL SUPERSTRUCTURE SCHEDULES AND DETAILS	S5 SERIES DRAWINGS
MASONRY DETAILS	S6 SERIES DRAWINGS

Client:

RANGER PROPERTIES
4790 BROADWAY
NEW YORK, NY 10034

Architect / Engineer:

FOGARTY FINGER architecture | interiors
69 Walker St, New York, NY 10013
t 212 966 7450 f 212 966 7444

Library Architect:

Andrew Berman Architect, PLLC
77 Chambers Street, 4th Floor
New York, NY 10007
Tel 212.226.5998

Structural:

Thornton Tomasetti
51 Madison Avenue
New York, NY 10010
Tel 917.661.7800

MEP / FP:

Concessi Engineering, PC
499 7th Avenue, 11th Floor South Tower
New York, NY 10018
Tel 212.629.6810

FACADE:

SIMPSON GUMPERTZ & HEGER
550 7th Avenue, 10th Floor
New York, NY 10018
Tel 212.271.7000

CODE:

METROPOLIS
22 Courtland Street, 10th Floor
New York, NY 10007
Tel 212.233.6344

No.	Date	Issue
2	DD ESTIMATING	02.06.2019
1	SCHEMATIC DESIGN	11.20.2018

Project:

4790 BROADWAY
NEW YORK, NY 10034

Drawing Title:

LEVEL 1 CONSTRUCTION PLAN

Seal & Signature:

DATE (MM-DD-YY):	02/06/19
PROJECT No.:	N18168.00
DRAWING BY:	AP
CHK BY:	SB
DWG. No.:	S-101.00
CADD FILE No.:	

C:\Sync\N18168.00_4790 BROADWAY_R19_CV.rvt

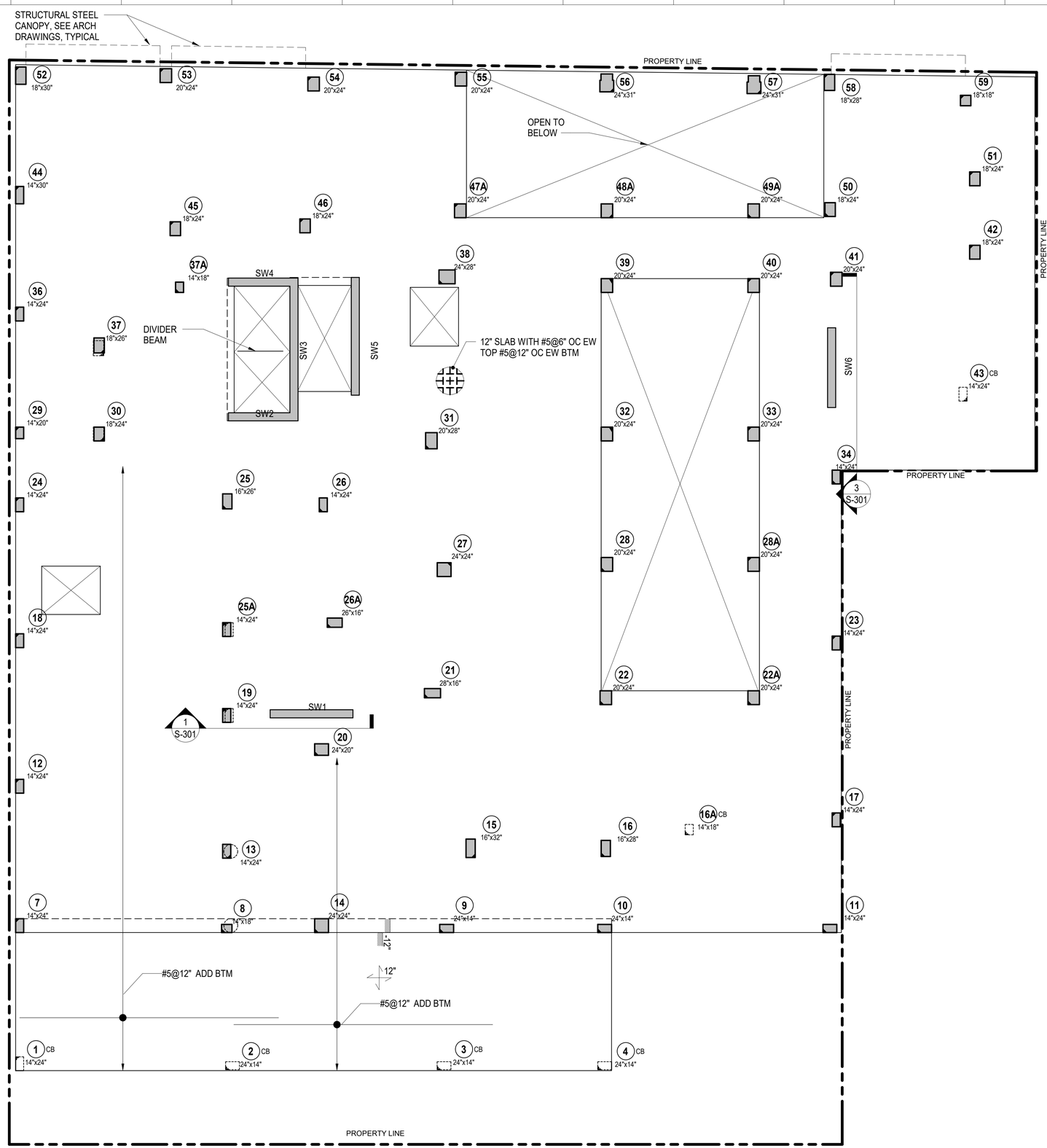

1 **LEVEL 02**
1/8" = 1'-0"

SHEET NOTES

1. TOP OF SLAB AND TOP OF BEAM EL [+ 14' - 0"]

   UON THUS: X - INDICATES CHANGE IN STRUCTURAL SLAB ELEVATION

2. TWO-WAY SLAB BAR PLACEMENT:
   1. EAST-WEST DIRECTION OUTER LAYER
   2. NORTH-SOUTH DIRECTION INNER LAYER
3. ONE-WAY SLAB BAR PLACEMENT:
   1. TOP AND BOTTOM BARS PARALLEL TO SPAN DIRECTION
   2. SHRINKAGE AND TEMPERATURE BARS PERPENDICULAR TO SPAN DIRECTION
4. SEE TYPICAL SLAB DETAILS
5. FOR COLUMN STRIP WIDTH SEE TOP BARS LEGEND
6. FOR SLAB CORNERS SUPPORTED BY BEAMS OR WALLS, SEE TYPICAL BEAM / WALL SUPPORTED SLAB EXTERIOR CORNER DETAIL
7. SEE S-406 FOR STUD RAIL LOCATION AND SIZE
8. SYMBOLS:

   XX" INDICATES THICKNESS OF TWO WAY SLAB - 8" THICK UON PROVIDE #4@12" OC BOTTOM CONTINUOUS EACH WAY 12" PROVIDE #5@12" OC BOTTOM CONTINUOUS EACH WAY SEE PLAN FOR TOP REINFORCING

   SX INDICATES ONE-WAY SLAB SPAN DIRECTION SEE ONE-WAY SCHEDULE AND ONE-WAY SLAB DETAILS

   UP INDICATES SLOPE IN TOP OF SLAB

   DB INDICATES HSS8x4x3/8 ELEVATOR DIVIDER BEAM (NOT FIREPROOFED)

   CA / CB INDICATES COLUMN ABOVE / BELOW

   INDICATES STUD RAILS ARE REQUIRED. SEE TYPICAL DETAILS.

9. SEE S-100 FOR TOP AND BOTTOM SLAB REINFORCEMENT NOTES
10. FOR ADDITIONAL INFORMATION REFER TO THE FOLLOWING DRAWINGS:

GENERAL NOTES	S0 SERIES DRAWINGS
TYPICAL FOUNDATION DETAILS	F2 SERIES DRAWINGS
LATERAL SYSTEM ELEVATIONS, CONNECTION FORCES AND DETAILS	S3 SERIES DRAWINGS
CONCRETE SUPERSTRUCTURE SCHEDULES AND DETAILS	S4 SERIES DRAWINGS
STEEL SUPERSTRUCTURE SCHEDULES AND DETAILS	S5 SERIES DRAWINGS
MASONRY DETAILS	S6 SERIES DRAWINGS

Client:

RANGER PROPERTIES
4790 BROADWAY
NEW YORK, NY 10034

Architect / Engineer:

FOGARTY FINGER architecture | interiors
69 Walker St, New York, NY 10013
t 212 966 7450 f 212 966 7444

Library Architect:

Andrew Berman Architect, PLLC
77 Chambers Street, 4th Floor
New York, NY 10007
Tel 212.226.5998

Structural:

Thornton Tomasetti
51 Madison Avenue
New York, NY 10010
Tel 917.661.7800

MEP / FP:

Concessi Engineering, PC
499 7th Avenue, 11th Floor South Tower
New York, NY 10018
Tel 212.629.6810

FACADE:

SIMPSON GUMPERTZ & HEGER
550 7th Avenue, 10th Floor
New York, NY 10018
Tel 212.271.7000

CODE:

METROPOLIS
22 Courtland Street, 10th Floor
New York, NY 10007
Tel 212.233.6344

No.	Date	Issue
2	DD ESTIMATING	02.06.2019
1	SCHEMATIC DESIGN	11.20.2018

Project:

4790 BROADWAY
NEW YORK, NY 10034

Drawing Title:

LEVEL 2 CONSTRUCTION PLAN

Seal & Signature:

DATE (MM-DD-YY):	02/06/19
PROJECT No.:	N18168.00
DRAWING BY:	AP
CHK BY:	SB
DWG. No.:	S-102.00
CADD FILE No.:	28 of 55

C:\Scratch\N18168.00_4790 BROADWAY_R19_CWard.rvt

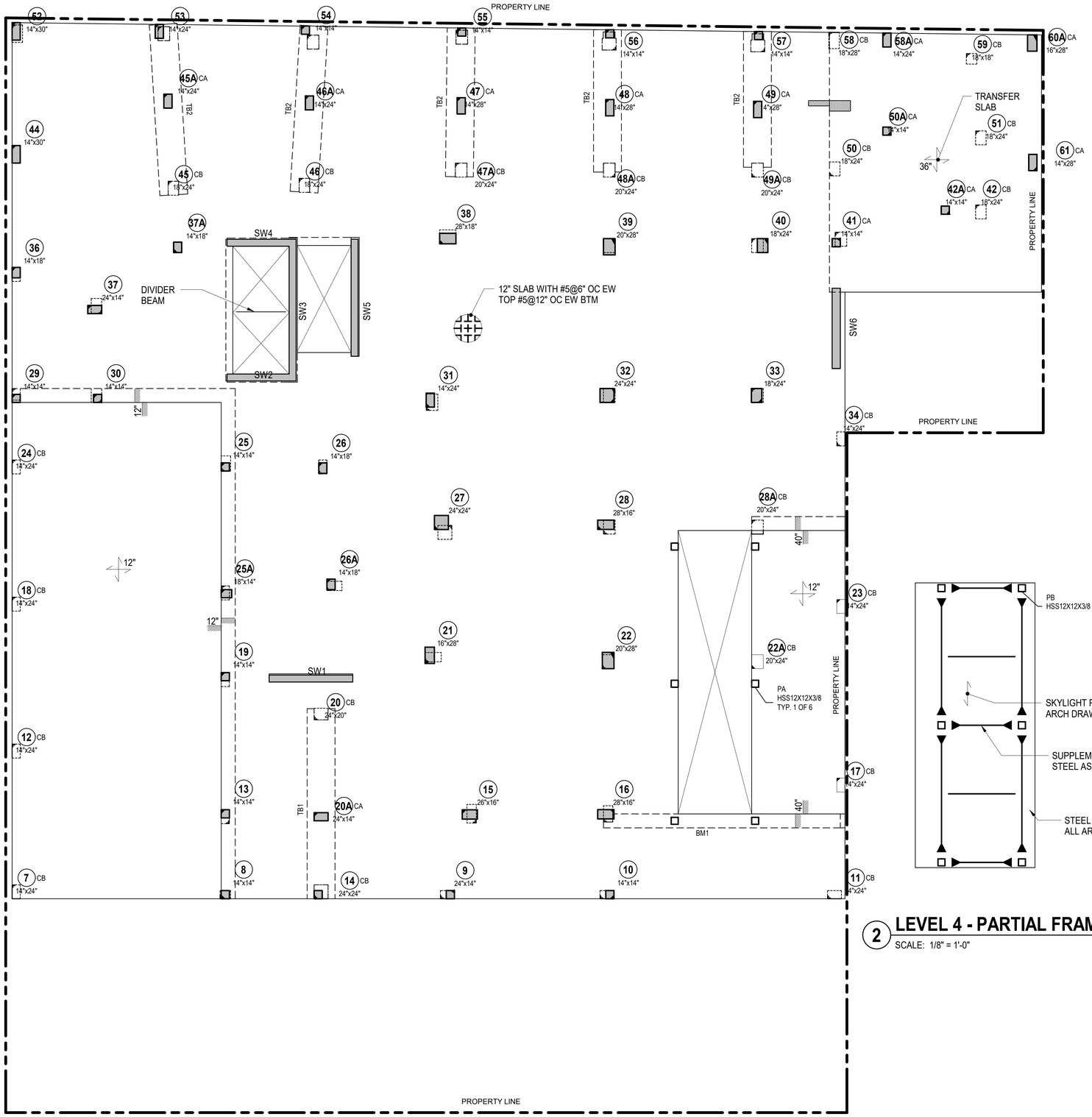

1 LEVEL 03

1/8" = 1'-0"

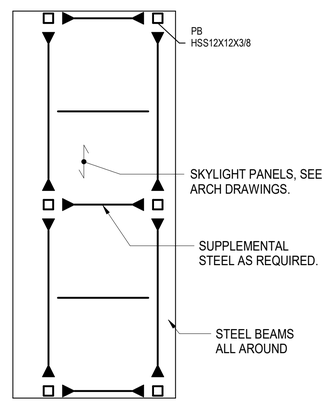

2 LEVEL 4 - PARTIAL FRAMING PLAN - CLERESTORY

SCALE: 1/8" = 1'-0"

SHEET NOTES

1. TOP OF SLAB AND TOP OF BEAM EL [+ 30' - 0"]

   UON THUS: X1 — X - INDICATES CHANGE IN STRUCTURAL SLAB ELEVATION

2. TWO-WAY SLAB BAR PLACEMENT:
   1. EAST-WEST DIRECTION OUTER LAYER
   2. NORTH-SOUTH DIRECTION INNER LAYER
3. ONE-WAY SLAB BAR PLACEMENT:
   1. TOP AND BOTTOM BARS PARALLEL TO SPAN DIRECTION
   2. SHRINKAGE AND TEMPERATURE BARS PERPENDICULAR TO SPAN DIRECTION
4. SEE TYPICAL SLAB DETAILS
5. FOR COLUMN STRIP WIDTH SEE TOP BARS LEGEND
6. FOR SLAB CORNERS SUPPORTED BY BEAMS OR WALLS, SEE TYPICAL BEAM / WALL SUPPORTED SLAB EXTERIOR CORNER DETAIL
7. SEE S-406 FOR STUD RAIL LOCATION AND SIZE
8. SYMBOLS:

   XX" — XX" INDICATES THICKNESS OF TWO WAY SLAB - 8" THICK UON
   PROVIDE #4@12" OC BOTTOM CONTINUOUS EACH WAY
   12" PROVIDE #5@12" OC BOTTOM CONTINUOUS EACH WAY
   SEE PLAN FOR TOP REINFORCING

   SX — INDICATES ONE-WAY SLAB SPAN DIRECTION
   SEE ONE-WAY SCHEDULE AND ONE-WAY SLAB DETAILS

   UP — INDICATES SLOPE IN TOP OF SLAB

   DB — INDICATES HSS8x4x3/8 ELEVATOR DIVIDER BEAM (NOT FIREPROOFED)

   CA / CB — INDICATES COLUMN ABOVE / BELOW

   INDICATES STUD RAILS ARE REQUIRED. SEE TYPICAL DETAILS.

9. SEE S-100 FOR TOP AND BOTTOM SLAB REINFORCEMENT NOTES
10. FOR ADDITIONAL INFORMATION REFER TO THE FOLLOWING DRAWINGS:

GENERAL NOTES	S0 SERIES DRAWINGS
TYPICAL FOUNDATION DETAILS	F2 SERIES DRAWINGS
LATERAL SYSTEM ELEVATIONS, CONNECTION FORCES AND DETAILS	S3 SERIES DRAWINGS
CONCRETE SUPERSTRUCTURE SCHEDULES AND DETAILS	S4 SERIES DRAWINGS
STEEL SUPERSTRUCTURE SCHEDULES AND DETAILS	S5 SERIES DRAWINGS
MASONRY DETAILS	S6 SERIES DRAWINGS

Client:

RANGER PROPERTIES
4790 BROADWAY
NEW YORK, NY 10034

Architect / Engineer:

FOGARTY FINGER architecture | interiors
69 Walker St, New York, NY 10013
t 212 966 7450 f 212 966 7444

Library Architect:

Andrew Berman Architect, PLLC
77 Chambers Street, 4th Floor
New York, NY 10007
Tel 212.226.5998

Structural:

Thornton Tomasetti
51 Madison Avenue
New York, NY 10010
Tel 917.661.7800

MEP / FP:

Concessi Engineering, PC
499 7th Avenue, 11th Floor South Tower
New York, NY 10018
Tel 212.629.6810

FACADE:

SIMPSON GUMPERTZ & HEGER
550 7th Avenue, 10th Floor
New York, NY 10018
Tel 212.271.7000

CODE:

METROPOLIS
22 Courtland Street, 10th Floor
New York, NY 10007
Tel 212.233.6344

No.	Date	Issue
2	DD ESTIMATING	02.06.2019
1	SCHEMATIC DESIGN	11.20.2018

Project:

4790 BROADWAY
NEW YORK, NY 10034

Drawing Title:

LEVEL 3 CONSTRUCTION PLAN

Seal & Signature:

DATE (MM-DD-YY): 02/06/19
PROJECT No.: N18168.00
DRAWING BY: AP
CHK BY: SB
DWG. No.: S-103.00
CADD FILE No.:

C:\Scratch\N18168.00_4790 BROADWAY_R19_CWest.rvt

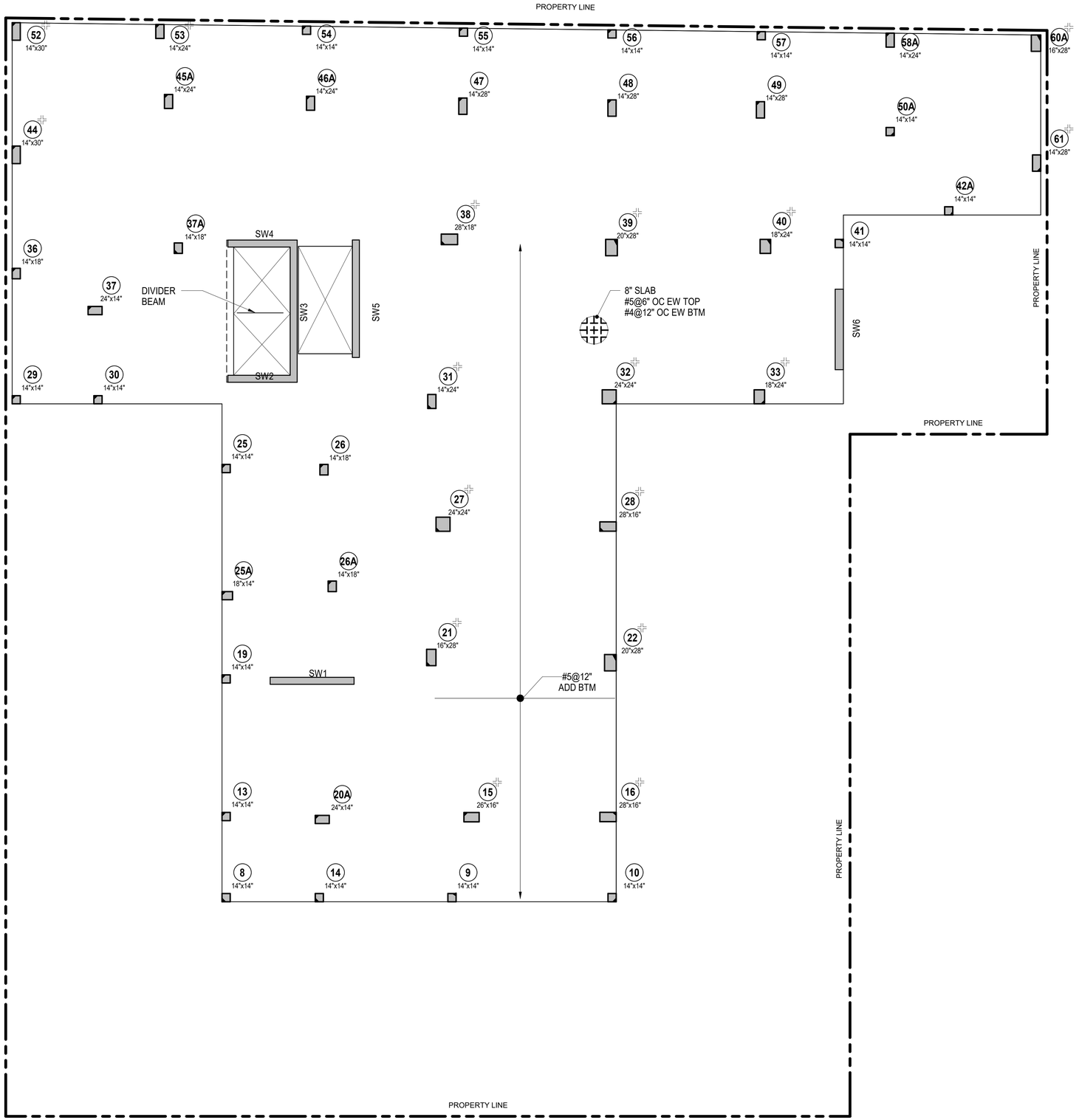

1 **LEVEL 04-10**
1/8" = 1'-0"

SHEET NOTES

1. TOP OF SLAB AND TOP OF BEAM EL
   LEVEL 4 [+ 39' - 0"] LEVEL 8 [+ 84' - 0"]
   LEVEL 5 [+ 48' - 0"] LEVEL 9 [+ 75' - 0"]
   LEVEL 6 [+ 57' - 0"] LEVEL 10 [+ 93' - 0"]
   LEVEL 7 [+ 66' - 0"]

   UON THUS: X1 — X - INDICATES CHANGE IN STRUCTURAL SLAB ELEVATION
2. TWO-WAY SLAB BAR PLACEMENT:
   1. EAST-WEST DIRECTION OUTER LAYER
   2. NORTH-SOUTH DIRECTION INNER LAYER
3. ONE-WAY SLAB BAR PLACEMENT:
   1. TOP AND BOTTOM BARS PARALLEL TO SPAN DIRECTION
   2. SHRINKAGE AND TEMPERATURE BARS PERPENDICULAR TO SPAN DIRECTION
4. SEE TYPICAL SLAB DETAILS
5. FOR COLUMN STRIP WIDTH SEE TOP BARS LEGEND
6. FOR SLAB CORNERS SUPPORTED BY BEAMS OR WALLS, SEE TYPICAL BEAM / WALL SUPPORTED SLAB EXTERIOR CORNER DETAIL
7. SEE S-406 FOR STUD RAIL LOCATION AND SIZE
8. SYMBOLS:
   - XX" — XX" INDICATES THICKNESS OF TWO WAY SLAB - 8" THICK UON PROVIDE #4@12" OC BOTTOM CONTINUOUS EACH WAY 12" PROVIDE #5@12" OC BOTTOM CONTINUOUS EACH WAY SEE PLAN FOR TOP REINFORCING
   - SX — INDICATES ONE-WAY SLAB SPAN DIRECTION SEE ONE-WAY SCHEDULE AND ONE-WAY SLAB DETAILS
   - UP — INDICATES SLOPE IN TOP OF SLAB
   - DB — INDICATES HSS8x4x3/8 ELEVATOR DIVIDER BEAM (NOT FIREPROOFED)
   - CA / CB — INDICATES COLUMN ABOVE / BELOW
   - INDICATES STUD RAILS ARE REQUIRED. SEE TYPICAL DETAILS.
9. SEE S-100 FOR TOP AND BOTTOM SLAB REINFORCEMENT NOTES
10. FOR ADDITIONAL INFORMATION REFER TO THE FOLLOWING DRAWINGS:

GENERAL NOTES	S0 SERIES DRAWINGS
TYPICAL FOUNDATION DETAILS	F2 SERIES DRAWINGS
LATERAL SYSTEM ELEVATIONS, CONNECTION FORCES AND DETAILS	S3 SERIES DRAWINGS
CONCRETE SUPERSTRUCTURE SCHEDULES AND DETAILS	S4 SERIES DRAWINGS
STEEL SUPERSTRUCTURE SCHEDULES AND DETAILS	S5 SERIES DRAWINGS
MASONRY DETAILS	S6 SERIES DRAWINGS

Client:
RANGER PROPERTIES
4790 BROADWAY
NEW YORK, NY 10034

Architect / Engineer:
FOGARTY FINGER architecture | interiors
69 Walker St, New York, NY 10013
t 212 966 7450 f 212 966 7444

Library Architect:
Andrew Berman Architect, PLLC
77 Chambers Street, 4th Floor
New York, NY 10007
Tel 212.226.5998

Structural:
Thornton Tomasetti
51 Madison Avenue
New York, NY 10010
Tel 917.661.7800

MEP / FP:
Concessi Engineering, PC
499 7th Avenue, 11th Floor South Tower
New York, NY 10018
Tel 212.629.6810

FACADE:
SIMPSON GUMPERTZ & HEGER
550 7th Avenue, 10th Floor
New York, NY 10018
Tel 212.271.7000

CODE:
METROPOLIS
22 Courtland Street, 10th Floor
New York, NY 10007
Tel 212.233.6344

No.	Date	Issue
2	DD ESTIMATING	02.06.2019
1	SCHEMATIC DESIGN	11.20.2018

Project:
4790 BROADWAY
NEW YORK, NY 10034

Drawing Title:
LEVEL 4 - 10
CONSTRUCTION PLAN

Seal & Signature:

DATE (MM-DD-YY):	02/06/19
PROJECT No.:	N18168.00
DRAWING BY:	AP
CHK BY:	SB
DWG. No.:	S-104.00
CADD FILE No.:	

C:\Sorati\N18168.00_4790 BROADWAY_R19_CV.rvt

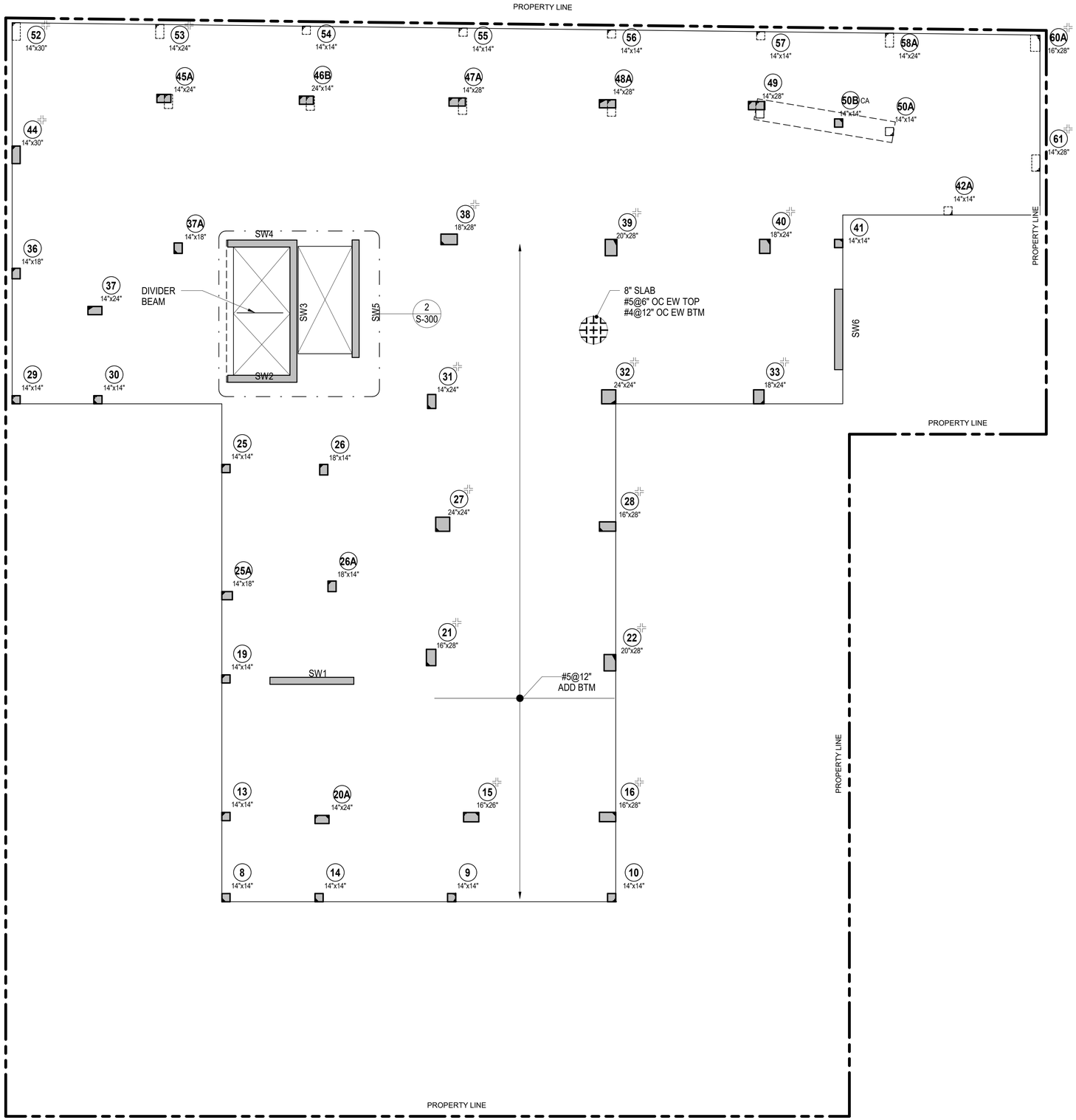

1 **LEVEL 11**
1/8" = 1'-0"

SHEET NOTES

1. TOP OF SLAB AND TOP OF BEAM EL [+ 103' - 0"]

   UON THUS: X1 — X - INDICATES CHANGE IN STRUCTURAL SLAB ELEVATION

2. TWO-WAY SLAB BAR PLACEMENT:
   1. EAST-WEST DIRECTION OUTER LAYER
   2. NORTH-SOUTH DIRECTION INNER LAYER
3. ONE-WAY SLAB BAR PLACEMENT:
   1. TOP AND BOTTOM BARS PARALLEL TO SPAN DIRECTION
   2. SHRINKAGE AND TEMPERATURE BARS PERPENDICULAR TO SPAN DIRECTION
4. SEE TYPICAL SLAB DETAILS
5. FOR COLUMN STRIP WIDTH SEE TOP BARS LEGEND
6. FOR SLAB CORNERS SUPPORTED BY BEAMS OR WALLS, SEE TYPICAL BEAM / WALL SUPPORTED SLAB EXTERIOR CORNER DETAIL
7. SEE S-406 FOR STUD RAIL LOCATION AND SIZE
8. SYMBOLS:

   XX" — XX" INDICATES THICKNESS OF TWO WAY SLAB - 8" THICK UON
   PROVIDE #4@12" OC BOTTOM CONTINUOUS EACH WAY
   12" PROVIDE #5@12" OC BOTTOM CONTINUOUS EACH WAY
   SEE PLAN FOR TOP REINFORCING

   SX — INDICATES ONE-WAY SLAB SPAN DIRECTION
   SEE ONE-WAY SCHEDULE AND ONE-WAY SLAB DETAILS

   UP — INDICATES SLOPE IN TOP OF SLAB

   DB — INDICATES HSS8x4x3/8 ELEVATOR DIVIDER BEAM (NOT FIREPROOFED)

   CA / CB — INDICATES COLUMN ABOVE / BELOW

   INDICATES STUD RAILS ARE REQUIRED. SEE TYPICAL DETAILS.

9. SEE S-100 FOR TOP AND BOTTOM SLAB REINFORCEMENT NOTES
10. FOR ADDITIONAL INFORMATION REFER TO THE FOLLOWING DRAWINGS:

GENERAL NOTES	S0 SERIES DRAWINGS
TYPICAL FOUNDATION DETAILS	F2 SERIES DRAWINGS
LATERAL SYSTEM ELEVATIONS, CONNECTION FORCES AND DETAILS	S3 SERIES DRAWINGS
CONCRETE SUPERSTRUCTURE SCHEDULES AND DETAILS	S4 SERIES DRAWINGS
STEEL SUPERSTRUCTURE SCHEDULES AND DETAILS	S5 SERIES DRAWINGS
MASONRY DETAILS	S6 SERIES DRAWINGS

Client:

RANGER PROPERTIES
4790 BROADWAY
NEW YORK, NY 10034

Architect / Engineer:

FOGARTY FINGER architecture | interiors
69 Walker St, New York, NY 10013
t 212 966 7450 f 212 966 7444

Library Architect:

Andrew Berman Architect, PLLC
77 Chambers Street, 4th Floor
New York, NY 10007
Tel 212.226.5998

Structural:

Thornton Tomasetti
51 Madison Avenue
New York, NY 10010
Tel 917.661.7800

MEP / FP:

Concessi Engineering, PC
499 7th Avenue, 11th Floor South Tower
New York, NY 10018
Tel 212.629.6810

FACADE:

SIMPSON GUMPERTZ & HEGER
550 7th Avenue, 10th Floor
New York, NY 10018
Tel 212.271.7000

CODE:

METROPOLIS
22 Courtland Street, 10th Floor
New York, NY 10007
Tel 212.233.6344

No.	Date	Issue
2	DD ESTIMATING	02.06.2019
1	SCHEMATIC DESIGN	11.20.2018

Project:

4790 BROADWAY
NEW YORK, NY 10034

Drawing Title:

LEVEL 11 CONSTRUCTION PLAN

Seal & Signature:

DATE (MM-DD-YY):	02/06/19
PROJECT No.:	N18168.00
DRAWING BY:	AP
CHK BY:	SB
DWG. No.:	S-105.00
CADD FILE No.:	

C:\Sync\N18168.00_4790 BROADWAY_R19_CV.rvt

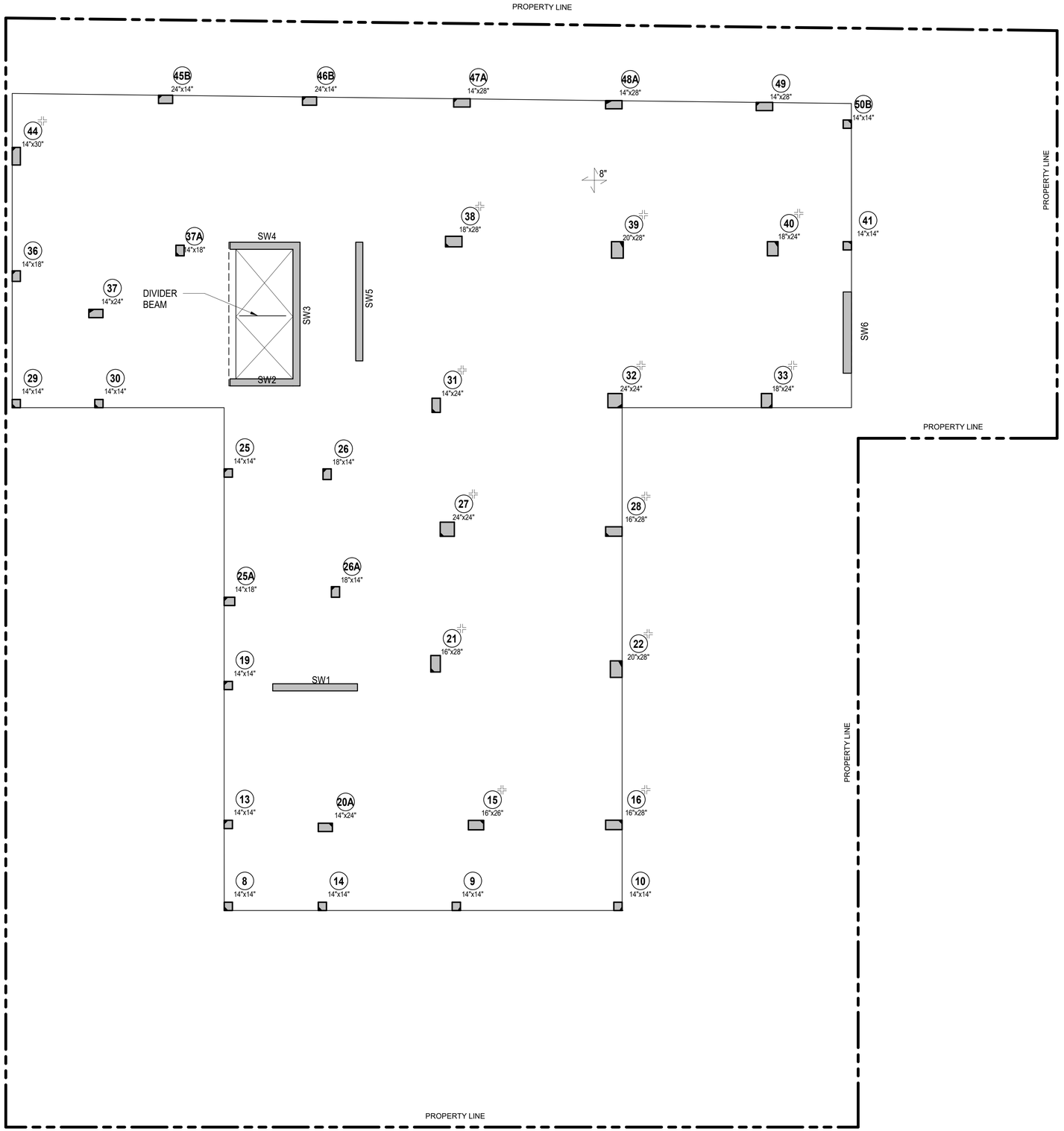

1 LEVEL 12

1/8" = 1'-0"

SHEET NOTES

1. TOP OF SLAB AND TOP OF BEAM EL LEVEL 12 [+ 112' - 0"]
   LEVEL 13 [+ 121' - 0"]

   UON THUS:
   X1 — X - INDICATES CHANGE IN STRUCTURAL SLAB ELEVATION

2. TWO-WAY SLAB BAR PLACEMENT:
   1. EAST-WEST DIRECTION OUTER LAYER
   2. NORTH-SOUTH DIRECTION INNER LAYER

3. ONE-WAY SLAB BAR PLACEMENT:
   1. TOP AND BOTTOM BARS PARALLEL TO SPAN DIRECTION
   2. SHRINKAGE AND TEMPERATURE BARS PERPENDICULAR TO SPAN DIRECTION

4. SEE TYPICAL SLAB DETAILS

5. FOR COLUMN STRIP WIDTH SEE TOP BARS LEGEND

6. FOR SLAB CORNERS SUPPORTED BY BEAMS OR WALLS, SEE TYPICAL BEAM / WALL SUPPORTED SLAB EXTERIOR CORNER DETAIL

7. SEE S-406 FOR STUD RAIL LOCATION AND SIZE

8. SYMBOLS:

   XX" — XX" INDICATES THICKNESS OF TWO WAY SLAB - 8" THICK UON
   PROVIDE #4@12" OC BOTTOM CONTINUOUS EACH WAY
   12" PROVIDE #5@12" OC BOTTOM CONTINUOUS EACH WAY
   SEE PLAN FOR TOP REINFORCING

   SX — INDICATES ONE-WAY SLAB SPAN DIRECTION
   SEE ONE-WAY SCHEDULE AND ONE-WAY SLAB DETAILS

   UP — INDICATES SLOPE IN TOP OF SLAB

   DB — INDICATES HSS8x4x3/8 ELEVATOR DIVIDER BEAM (NOT FIREPROOFED)

   CA / CB — INDICATES COLUMN ABOVE / BELOW

   INDICATES STUD RAILS ARE REQUIRED. SEE TYPICAL DETAILS.

9. SEE S-100 FOR TOP AND BOTTOM SLAB REINFORCEMENT NOTES

10. FOR ADDITIONAL INFORMATION REFER TO THE FOLLOWING DRAWINGS:

GENERAL NOTES	S0 SERIES DRAWINGS
TYPICAL FOUNDATION DETAILS	F2 SERIES DRAWINGS
LATERAL SYSTEM ELEVATIONS, CONNECTION FORCES AND DETAILS	S3 SERIES DRAWINGS
CONCRETE SUPERSTRUCTURE SCHEDULES AND DETAILS	S4 SERIES DRAWINGS
STEEL SUPERSTRUCTURE SCHEDULES AND DETAILS	S5 SERIES DRAWINGS
MASONRY DETAILS	S6 SERIES DRAWINGS

Client:

RANGER PROPERTIES
4790 BROADWAY
NEW YORK, NY 10034

Architect / Engineer:

FOGARTY FINGER architecture | interiors
69 Walker St, New York, NY 10013
t 212 966 7450 f 212 966 7444

Library Architect:

Andrew Berman Architect, PLLC
77 Chambers Street, 4th Floor
New York, NY 10007
Tel 212.226.5998

Structural:

Thornton Tomasetti
51 Madison Avenue
New York, NY 10010
Tel 917.661.7800

MEP / FP:

Concessi Engineering, PC
499 7th Avenue, 11th Floor South Tower
New York, NY 10018
Tel 212.629.6810

FACADE:

SIMPSON GUMPERTZ & HEGER
550 7th Avenue, 10th Floor
New York, NY 10018
Tel 212.271.7000

CODE:

METROPOLIS
22 Courtland Street, 10th Floor
New York, NY 10007
Tel 212.233.6344

No.	Date	Issue
2	DD ESTIMATING	02.06.2019
1	SCHEMATIC DESIGN	11.20.2018

Project:

4790 BROADWAY
NEW YORK, NY 10034

Drawing Title:

LEVEL 12 - 13
CONSTRUCTION PLAN

Seal & Signature:

DATE (MM-DD-YY):	02/06/19
PROJECT No.:	N18168.00
DRAWING BY:	AP
CHK BY:	SB
DWG. No.:	S-106.00
CADD FILE No.:	

C:\Sync\N18168.00_4790 BROADWAY_R19_CW.rvt

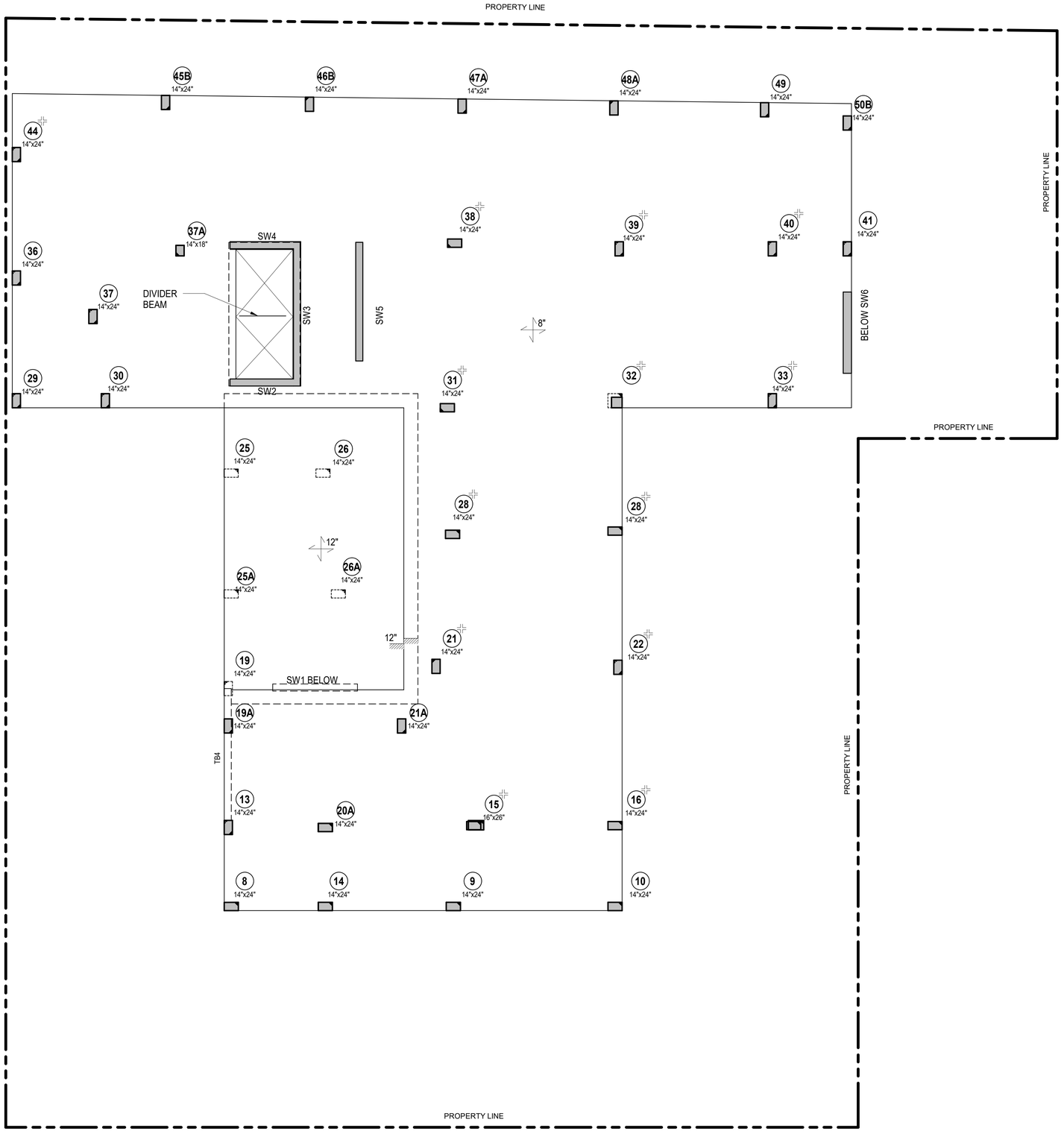

1 **LEVEL 14**
1/8" = 1'-0"

SHEET NOTES

1. TOP OF SLAB AND TOP OF BEAM EL [+ 131' - 0"]

   UON THUS:
   X - INDICATES CHANGE IN STRUCTURAL SLAB ELEVATION

2. TWO-WAY SLAB BAR PLACEMENT:
   1. EAST-WEST DIRECTION OUTER LAYER
   2. NORTH-SOUTH DIRECTION INNER LAYER

3. ONE-WAY SLAB BAR PLACEMENT:
   1. TOP AND BOTTOM BARS PARALLEL TO SPAN DIRECTION
   2. SHRINKAGE AND TEMPERATURE BARS PERPENDICULAR TO SPAN DIRECTION

4. SEE TYPICAL SLAB DETAILS

5. FOR COLUMN STRIP WIDTH SEE TOP BARS LEGEND

6. FOR SLAB CORNERS SUPPORTED BY BEAMS OR WALLS, SEE TYPICAL BEAM / WALL SUPPORTED SLAB EXTERIOR CORNER DETAIL

7. SEE S-406 FOR STUD RAIL LOCATION AND SIZE

8. SYMBOLS:

   XX" INDICATES THICKNESS OF TWO WAY SLAB - 8" THICK UON
   PROVIDE #4@12" OC BOTTOM CONTINUOUS EACH WAY
   12" PROVIDE #5@12" OC BOTTOM CONTINUOUS EACH WAY
   SEE PLAN FOR TOP REINFORCING

   SX INDICATES ONE-WAY SLAB SPAN DIRECTION
   SEE ONE-WAY SCHEDULE AND ONE-WAY SLAB DETAILS

   UP INDICATES SLOPE IN TOP OF SLAB

   DB INDICATES HSS8x4x3/8 ELEVATOR DIVIDER BEAM (NOT FIREPROOFED)

   CA / CB INDICATES COLUMN ABOVE / BELOW

   INDICATES STUD RAILS ARE REQUIRED. SEE TYPICAL DETAILS.

9. SEE S-100 FOR TOP AND BOTTOM SLAB REINFORCEMENT NOTES

10. FOR ADDITIONAL INFORMATION REFER TO THE FOLLOWING DRAWINGS:

GENERAL NOTES	S0 SERIES DRAWINGS
TYPICAL FOUNDATION DETAILS	F2 SERIES DRAWINGS
LATERAL SYSTEM ELEVATIONS, CONNECTION FORCES AND DETAILS	S3 SERIES DRAWINGS
CONCRETE SUPERSTRUCTURE SCHEDULES AND DETAILS	S4 SERIES DRAWINGS
STEEL SUPERSTRUCTURE SCHEDULES AND DETAILS	S5 SERIES DRAWINGS
MASONRY DETAILS	S6 SERIES DRAWINGS

Client:

RANGER PROPERTIES
4790 BROADWAY
NEW YORK, NY 10034

Architect / Engineer:

FOGARTY FINGER
architecture | interiors
69 Walker St, New York, NY 10013
t 212 966 7450 f 212 966 7444

Library Architect:

Andrew Berman Architect, PLLC
77 Chambers Street, 4th Floor
New York, NY 10007
Tel 212.226.5998

Structural:

Thornton Tomasetti
51 Madison Avenue
New York, NY 10010
Tel 917.661.7800

MEP / FP:

Concessi Engineering, PC
499 7th Avenue, 11th Floor South Tower
New York, NY 10018
Tel 212.629.6810

FACADE:

SIMPSON GUMPERTZ & HEGER
550 7th Avenue, 10th Floor
New York, NY 10018
Tel 212.271.7000

CODE:

METROPOLIS
22 Courtland Street, 10th Floor
New York, NY 10007
Tel 212.233.6344

No.	Date	Issue
2	DD ESTIMATING	02.06.2019
1	SCHEMATIC DESIGN	11.20.2018

Project:

4790 BROADWAY
NEW YORK, NY 10034

Drawing Title:

LEVEL 14 CONSTRUCTION PLAN

Seal & Signature:

DATE (MM-DD-YY):	02/06/19
PROJECT No.:	N18168.00
DRAWING BY:	AP
CHK BY:	SB
DWG. No.:	S-107.00
CADD FILE No.:	33 of 55

C:\Scratch\N18168.00_4790 BROADWAY_R19_CWard.rvt

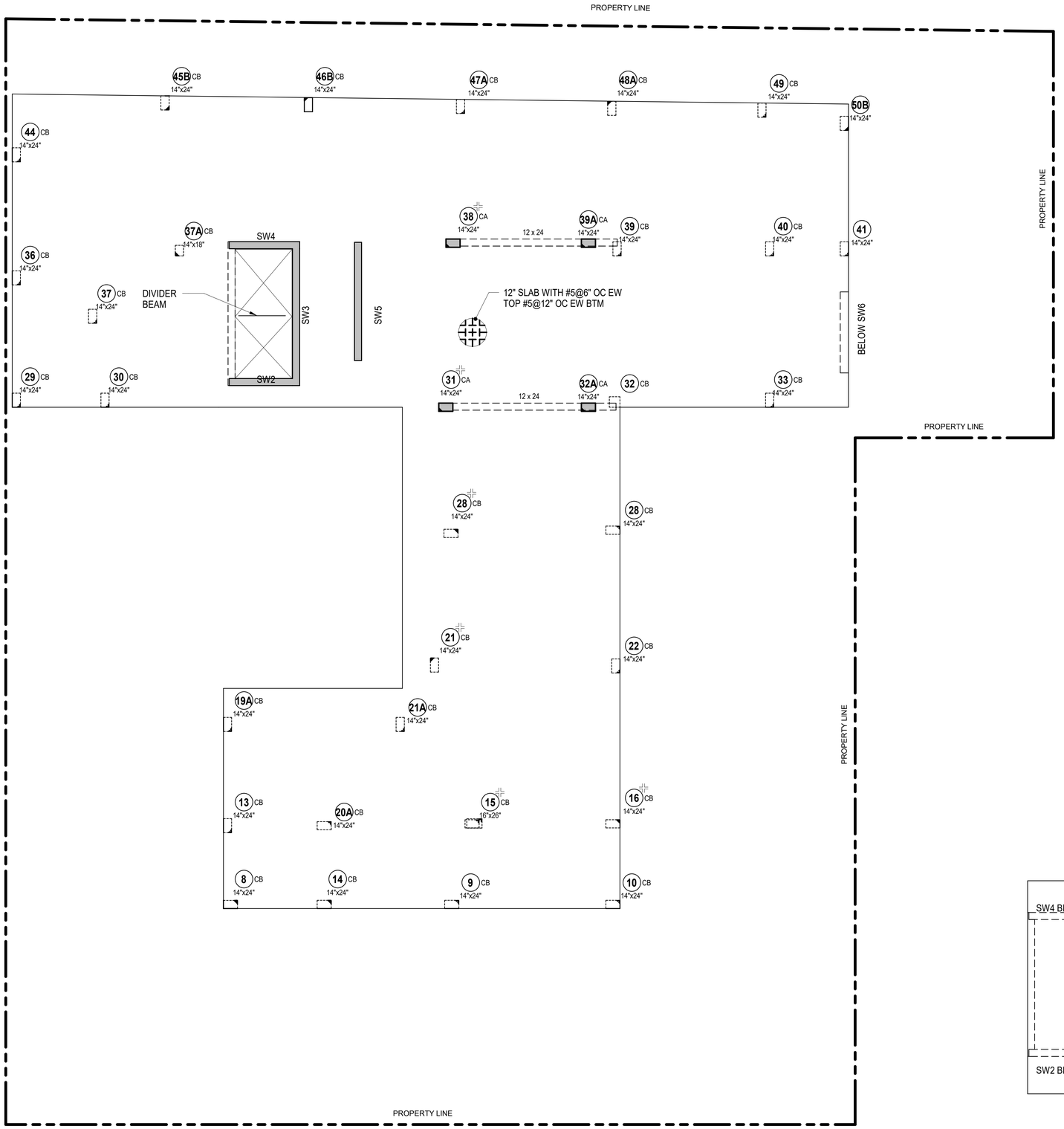

1 LEVEL 15 - ROOF

1/8" = 1'-0"

SHEET NOTES

1. TOP OF SLAB AND TOP OF BEAM EL [+ 14'- 3"]

   UON THUS: X1 — X - INDICATES CHANGE IN STRUCTURAL SLAB ELEVATION

2. TWO-WAY SLAB BAR PLACEMENT:
   1. EAST-WEST DIRECTION OUTER LAYER
   2. NORTH-SOUTH DIRECTION INNER LAYER
3. ONE-WAY SLAB BAR PLACEMENT:
   1. TOP AND BOTTOM BARS PARALLEL TO SPAN DIRECTION
   2. SHRINKAGE AND TEMPERATURE BARS PERPENDICULAR TO SPAN DIRECTION
4. SEE TYPICAL SLAB DETAILS
5. FOR COLUMN STRIP WIDTH SEE TOP BARS LEGEND
6. FOR SLAB CORNERS SUPPORTED BY BEAMS OR WALLS, SEE TYPICAL BEAM / WALL SUPPORTED SLAB EXTERIOR CORNER DETAIL
7. SEE S-406 FOR STUD RAIL LOCATION AND SIZE
8. SYMBOLS:

   XX" — XX" INDICATES THICKNESS OF TWO WAY SLAB - 8" THICK UON
   PROVIDE #4@12" OC BOTTOM CONTINUOUS EACH WAY
   12" PROVIDE #5@12" OC BOTTOM CONTINUOUS EACH WAY
   SEE PLAN FOR TOP REINFORCING

   SX — INDICATES ONE-WAY SLAB SPAN DIRECTION
   SEE ONE-WAY SCHEDULE AND ONE-WAY SLAB DETAILS

   UP — INDICATES SLOPE IN TOP OF SLAB

   DB — INDICATES HSS8x4x3/8 ELEVATOR DIVIDER BEAM (NOT FIREPROOFED)

   CA / CB — INDICATES COLUMN ABOVE / BELOW

   INDICATES STUD RAILS ARE REQUIRED. SEE TYPICAL DETAILS.

9. SEE S-100 FOR TOP AND BOTTOM SLAB REINFORCEMENT NOTES
10. FOR ADDITIONAL INFORMATION REFER TO THE FOLLOWING DRAWINGS:

GENERAL NOTES	S0 SERIES DRAWINGS
TYPICAL FOUNDATION DETAILS	F2 SERIES DRAWINGS
LATERAL SYSTEM ELEVATIONS, CONNECTION FORCES AND DETAILS	S3 SERIES DRAWINGS
CONCRETE SUPERSTRUCTURE SCHEDULES AND DETAILS	S4 SERIES DRAWINGS
STEEL SUPERSTRUCTURE SCHEDULES AND DETAILS	S5 SERIES DRAWINGS
MASONRY DETAILS	S6 SERIES DRAWINGS

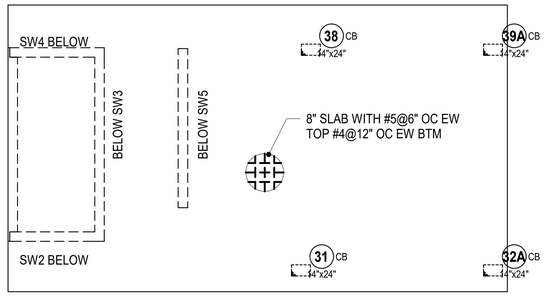

2 LEVEL 16 MECH. ROOF

SCALE: 1/8" = 1'-0"

Client:

RANGER PROPERTIES
4790 BROADWAY
NEW YORK, NY 10034

Architect / Engineer:

FOGARTY FINGER architecture | interiors
69 Walker St, New York, NY 10013
t 212 966 7450 f 212 966 7444

Library Architect:

Andrew Berman Architect, PLLC
77 Chambers Street, 4th Floor
New York, NY 10007
Tel 212.226.5998

Structural:

Thornton Tomasetti
51 Madison Avenue
New York, NY 10010
Tel 917.661.7800

MEP / FP:

Concessi Engineering, PC
499 7th Avenue, 11th Floor South Tower
New York, NY 10018
Tel 212.629.6810

FACADE:

SIMPSON GUMPERTZ & HEGER
550 7th Avenue, 10th Floor
New York, NY 10018
Tel 212.271.7000

CODE:

METROPOLIS
22 Courtland Street, 10th Floor
New York, NY 10007
Tel 212.233.6344

No.	Date	Issue
2	DD ESTIMATING	02.06.2019
1	SCHEMATIC DESIGN	11.20.2018

Project:

4790 BROADWAY
NEW YORK, NY 10034

Drawing Title:

LEVEL 15 ROOF
CONSTRUCTION PLAN

Seal & Signature:

DATE (MM-DD-YY): 02/06/19
PROJECT No.: N18168.00
DRAWING BY: AP
CHK BY: SB
DWG. No.: S-108.00
CADD FILE No.:

C:\Sites\N18168.00_4790 BROADWAY_R19_DWest.rvt

CONCRETE SHEAR WALL SCHEDULE

CONCRETE STRENGTH	MARK / FLOOR	ZONE 1' THICKNESS	ZONE 1' VERT BAR	ZONE 1' TIES	ZONE 1 VERT BAR	ZONE 1 TIES	ZONE 1 HORZ BAR EACH FACE	ZONE 2 THICKNESS	ZONE 2 VERT BAR	ZONE 2 TIES	ZONE 2 VERT BAR	ZONE 2 TIES	ZONE 2 HORZ BAR EACH FACE
5000 PSI	ROOF	12	8-#5		8-#5		#4@12	12	8-#5		8-#5		#4@12
	LEVEL 14	12	8-#5		8-#5		#4@12	12	8-#5		8-#5		#4@12
	LEVEL 13	12	8-#5		8-#5		#4@12	12	8-#5		8-#5		#4@12
	LEVEL 12	12	8-#5		8-#5		#4@12	12	8-#5		8-#5		#4@12
	LEVEL 11	12	8-#5		8-#5		#4@12	12	8-#5		8-#5		#4@12
	LEVEL 10	12	8-#5		8-#5		#4@12	12	8-#5		8-#5		#4@12
	LEVEL 9	12	8-#5		8-#5		#4@12	12	8-#5		8-#5		#4@12
	LEVEL 8	12	8-#5		8-#5		#4@12	12	8-#5		8-#5		#4@12
	LEVEL 7	12	8-#5		8-#5		#4@12	12	8-#5		8-#5		#4@12
	LEVEL 6	12	8-#5		8-#5		#4@12	12	8-#5		8-#5		#4@12
	LEVEL 5	12	8-#5		8-#5		#4@12	12	8-#7	TIES	8-#5		#4@12
	LEVEL 4	12	8-#5		8-#5		#4@12	12	8-#7	TIES	8-#5		#4@12
8000 PSI	LEVEL 3	14	8-#9	TIES	8-#5		#4@9	14	14-#9	TIES	2-#7		#4@9
	LEVEL 2	14	10-#9	TIES	8-#5		#4@9	14	18-#9	TIES	2-#7		#4@9
	LEVEL 1	14	14-#9	TIES	8-#5	TIES	#4@9	14	24-#9*	TIES	2-#9	TIES	#4@9

MARK / FLOOR	ZONE 3 THICKNESS	ZONE 3 VERT BAR	ZONE 3 TIES	ZONE 3 VERT BAR	ZONE 3 TIES	ZONE 3 HORZ BAR EACH FACE	ZONE 4 THICKNESS	ZONE 4 VERT BAR	ZONE 4 TIES	ZONE 4 VERT BAR	ZONE 4 TIES	ZONE 4 HORZ BAR EACH FACE
ROOF	12	8-#5		20-#5		#4@12	12	8-#5		10-#5		#4@12
LEVEL 14	12	8-#5		20-#5		#4@12	12	8-#5		10-#5		#4@12
LEVEL 13	12	8-#5		20-#5		#4@12	12	8-#5		10-#5		#4@12
LEVEL 12	12	8-#5		20-#5		#4@12	12	8-#5		10-#5		#4@12
LEVEL 11	12	8-#5		20-#5		#4@12	12	8-#5		10-#5		#4@12
LEVEL 10	12	8-#5		20-#5		#4@12	12	8-#5		10-#5		#4@12
LEVEL 9	12	8-#5		20-#5		#4@12	12	8-#5		10-#5		#4@12
LEVEL 8	12	8-#5		20-#5		#4@12	12	8-#5		10-#5		#4@12
LEVEL 7	12	8-#7		20-#5		#4@12	12	8-#5		10-#5		#4@12
LEVEL 6	12	8-#7		20-#5		#4@12	12	8-#7	TIES	10-#5		#4@12
LEVEL 5	12	12-#7	TIES	20-#5		#4@12	12	8-#7	TIES	10-#5		#4@12
LEVEL 4	12	12-#7	TIES	20-#5		#4@12	12	8-#7	TIES	10-#5		#4@12
LEVEL 3	14	12-#9	TIES	20-#7		#4@9	14	12-#9	TIES	6-#9		#4@9
LEVEL 2	12	16-#9	TIES	20-#7		#4@9	14	14-#9	TIES	6-#9		#4@9
LEVEL 1	12	18-#9	TIES	20-#7	TIES	#4@9	14	24-#9*	TIES	6-#9	TIES	#4@9

MARK / FLOOR	ZONE 5 THICKNESS	ZONE 5 VERT BAR	ZONE 5 TIES	ZONE 5 VERT BAR	ZONE 5 TIES	ZONE 5 HORZ BAR EACH FACE	ZONE 6 THICKNESS	ZONE 6 VERT BAR	ZONE 6 TIES	ZONE 6 VERT BAR	ZONE 6 TIES	ZONE 6 HORZ BAR EACH FACE
ROOF	12	8-#5		18-#5		#4@12	14	8-#5		6-#5		#4@9
LEVEL 14	12	8-#5		16-#5		#4@12	14	8-#5		6-#5		#4@9
LEVEL 13	12	8-#5		16-#5		#4@12	14	8-#5		6-#5		#4@9
LEVEL 12	12	8-#5		16-#5		#4@12	14	8-#5		6-#5		#4@9
LEVEL 11	12	8-#5		16-#5		#4@12	14	8-#5		6-#5		#4@9
LEVEL 10	12	8-#5		16-#5		#4@12	12	8-#5		6-#5		#4@9
LEVEL 9	12	8-#5		16-#5		#4@12	14	8-#5		6-#5		#4@9
LEVEL 8	12	8-#5		16-#5		#4@12	14	8-#5		6-#5		#4@9
LEVEL 7	12	8-#5		16-#5		#4@12	14	8-#5		6-#5		#4@9
LEVEL 6	12	8-#5		16-#5		#4@12	14	8-#7		6-#5		#4@9
LEVEL 5	12	8-#7		16-#5		#4@12	14	8-#7		6-#5		#4@9
LEVEL 4	12	8-#7		16-#5		#4@12	12	10-#7	TIES	6-#5		#4@9
LEVEL 3	14	0-#7		12-#7	TIES	#4@9	14	10-#9	TIES	6-#5		#4@9
LEVEL 2	14	0-#7		12-#7	TIES	#4@9	14	20-#9	TIES	6-#5		#4@9
LEVEL 1	14	0-#9	TIES	12-#9	TIES	#4@9	14	20-#9	TIES	6-#5	TIES	#4@9

NOTE:
1. VERTICAL BARS ARE REPORTED AS THE TOTAL IN EACH ZONE. ASSUME 1/2 EACH FACE, UON.
2. * INDICATES VERTICAL REINFORCEMENT IN 3 CURTAINS AND COUPLERS ARE RECOMMENDED.

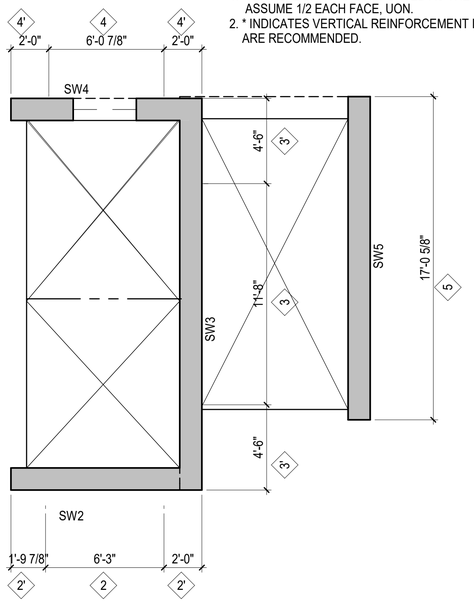

1 PARTIAL PLAN - SW1 - CELLAR TO LEVEL 3

SCALE: 1/4" = 1'-0"

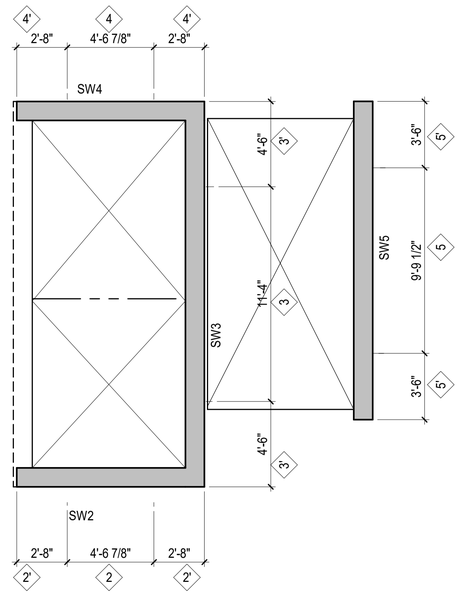

2 PARTIAL PLAN - SW1 - LEVEL 4 TO ROOF

SCALE: 1/4" = 1'-0"

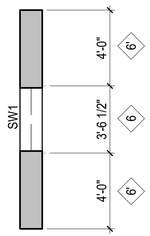

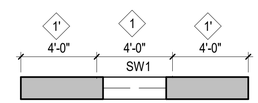

3 PARTIAL PLAN - SW6 - LEVEL 1 TO LEVEL 15

SCALE: 1/4" = 1'-0"

4 PARTIAL PLAN - SW1 - CELLAR TO LEVEL 15

SCALE: 1/4" = 1'-0"

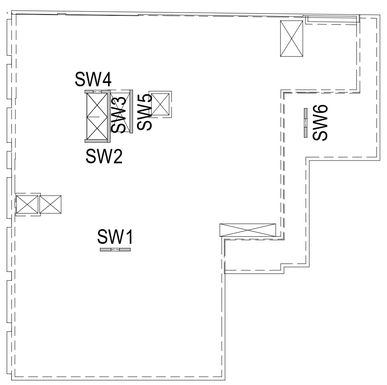

5 SHEARWALL KEY PLAN

SCALE: 1" = 30'-0"

SHEAR WALL CONSTRUCTION TOLERANCES NOTES:

1. WALL THICKNESS -1/4" TO +3/8"
2. VARIATIONS FROM PLUMB:
   - A. IN ANY STORY ±1/2"
   - B. ENTIRE HEIGHT ±1"
3. VARIATION IN LOCATION OF EMBEDDED PLATES:
   - A. HORIZONTAL AND VERTICAL ±1 1/2"
   - B. ALIGNMENT AND PLUMB +1/4" IN 12"
4. VARIATION IN SIZE OF SLEEVES ±1/2" TYPICAL
5. DOOR BLOCKOUTS:
   - A. SIDE JAMBS +1" PLUS DRAFT
   - B. HEADS +1" PLUS DRAFT
6. OTHER BLOCKOUTS +1", -1/4" PLUS DRAFT

6 SHEAR WALL CONSTRUCTION TOLERANCE NOTES

NOT TO SCALE

SHEAR WALL NOTES:

1. FOR TOP OF STRUCTURAL SLAB ELEVATIONS SEE PLANS
2. SEE TYPICAL SHEAR WALL REINFORCEMENT ARRANGEMENT - PLAN FOR VERTICAL BAR AND TIE ARRANGEMENT INFORMATION
3. PROVIDE TENSION LAP SPLICE AT ALL VERTICAL BARS AT BOTTOM OF SHEAR WALLS AND WHERE DESIGNATED AS TENSION (T) SEE SHEAR WALL LAP SPLICE SCHEDULE
4. ALL SHEAR WALL HORIZONTAL BARS SHALL BE LAPPED USING THE TENSION LAP SPLICE LENGTHS SEE SHEAR WALL LAP SPLICE SCHEDULE
5. SHEAR WALL PENETRATIONS ARE SHOWN ON THE SHEAR WALL ELEVATIONS ADDITIONAL PENETRATIONS REQUIRE PRIOR WRITTEN APPROVAL BY THE SER
6. "NONE" INDICATES NO TIES ARE REQUIRED
   "TIED" INDICATES TYPICAL TIES AS SHOWN IN TYPICAL SHEAR WALL REINFORCEMENT ARRANGEMENT - PLAN
   "FULL" INDICATES FULLY TIED AS SHOWN IN FULLY TIED SHEAR WALL ZONES DETAIL

7 SHEAR WALL NOTES

NOT TO SCALE

Client:
RANGER PROPERTIES
4790 BROADWAY
NEW YORK, NY 10034

Architect / Engineer:
FOGARTY FINGER architecture | interiors
69 Walker St, New York, NY 10013
t 212 966 7450 f 212 966 7444

Library Architect:
Andrew Berman Architect, PLLC
77 Chambers Street, 4th Floor
New York, NY 10007
Tel 212.226.5998

Structural:
Thornton Tomasetti
51 Madison Avenue
New York, NY 10010
Tel 917.661.7800

MEP / FP:
Concessi Engineering, PC
499 7th Avenue, 11th Floor South Tower
New York, NY 10018
Tel 212.629.6810

FACADE:
SIMPSON GUMPERTZ & HEGER
550 7th Avenue, 10th Floor
New York, NY 10018
Tel 212.271.7000

CODE:
METROPOLIS
22 Courtland Street, 10th Floor
New York, NY 10007
Tel 212.233.6344

No.	Date	Issue
2	DD ESTIMATING	02.06.2019
1	SCHEMATIC DESIGN	11.20.2018

Project:
4790 BROADWAY
NEW YORK, NY 10034

Drawing Title:
SHEAR WALL PLANS AND ELEVATIONS I

Seal & Signature:

DATE (MM-DD-YY): 02/06/19
PROJECT No.: N18168.00
DRAWING BY: Author
CHK BY: Checker
DWG. No.: S-300.00
CADD FILE No.:

C:\Scratch\N18168.00_4790 BROADWAY_R19_CWard.rvt

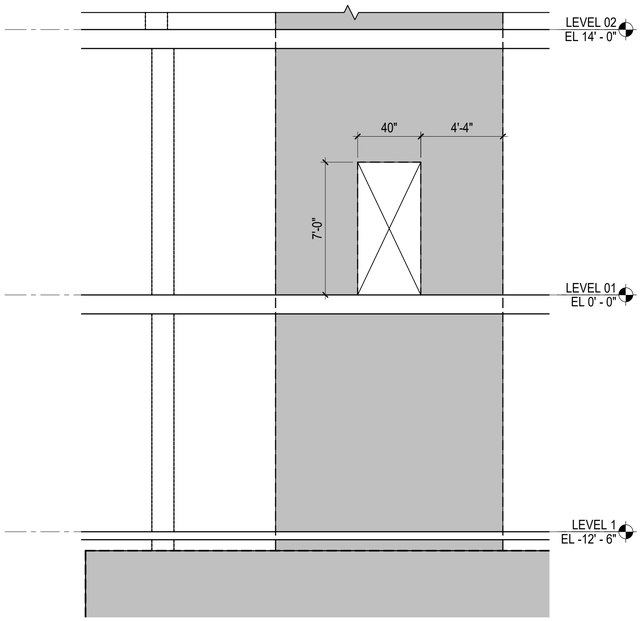

1 PARTIAL ELEVATION - SW1

SCALE: 1/4" = 1'-0"

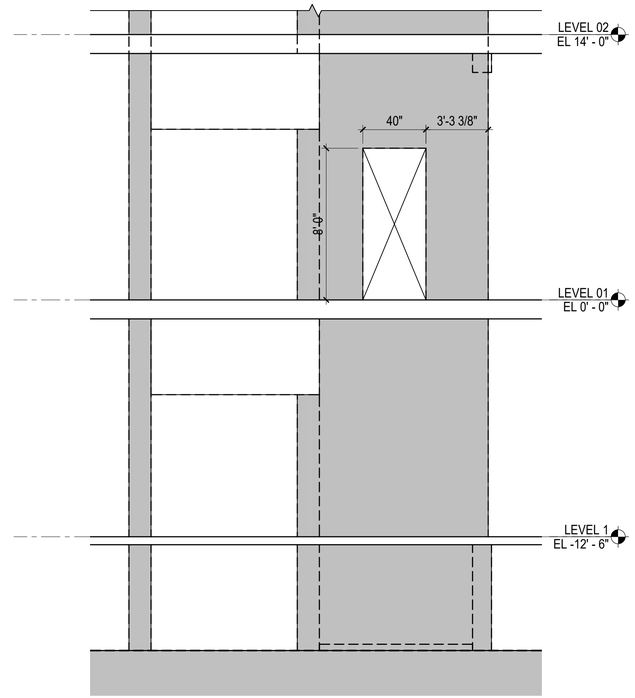

2 PARTIAL ELEVATION - SW4

SCALE: 1/4" = 1'-0"

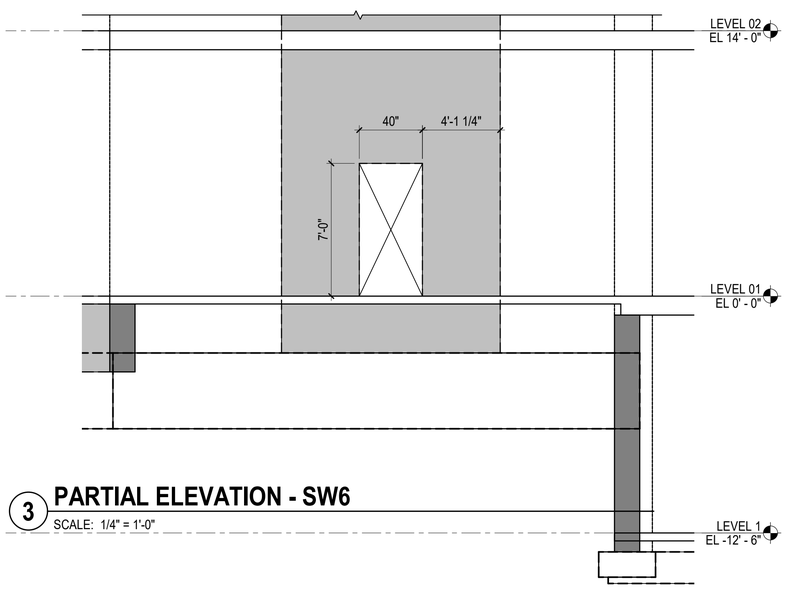

3 PARTIAL ELEVATION - SW6

SCALE: 1/4" = 1'-0"

Client:

RANGER PROPERTIES
4790 BROADWAY
NEW YORK, NY 10034

Architect / Engineer:

FOGARTY FINGER
architecture | interiors

69 Walker St, New York, NY 10013
t 212 966 7450 f 212 966 7444

Library Architect:

Andrew Berman Architect, PLLC
77 Chambers Street, 4th Floor
New York, NY 10007
Tel 212.226.5998

Structural:

Thornton Tomasetti
51 Madison Avenue
New York, NY 10010
Tel 917.661.7800

MEP / FP:

Concessi Engineering, PC
499 7th Avenue, 11th Floor South Tower
New York, NY 10018
Tel 212.629.6810

FACADE:

SIMPSON GUMPERTZ & HEGER
550 7th Avenue, 10th Floor
New York, NY 10018
Tel 212.271.7000

CODE:

METROPOLIS
22 Courtland Street, 10th Floor
New York, NY 10007
Tel 212.233.6344

No.	Date	Issue
2	DD ESTIMATING	02.06.2019
1	SCHEMATIC DESIGN	11.20.2018

Project:

4790 BROADWAY
NEW YORK, NY 10034

Drawing Title:

SHEAR WALL PLANS AND ELEVATIONS II

Seal & Signature:

DATE (MM-DD-YY): 02/06/19
PROJECT No.: N18168.00
DRAWING BY: AP
CHK BY: SB
DWG. No.: **S-301.00**
CADD FILE No.:

C:\Scratch\N18168.00_4790 BROADWAY_R19_CWard.rvt

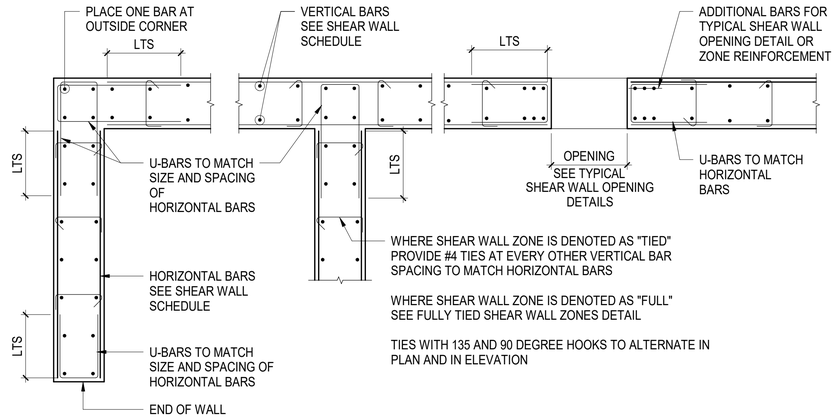

1 TYPICAL SHEAR WALL REINFORCEMENT ARRANGEMENT - PLAN

NOT TO SCALE

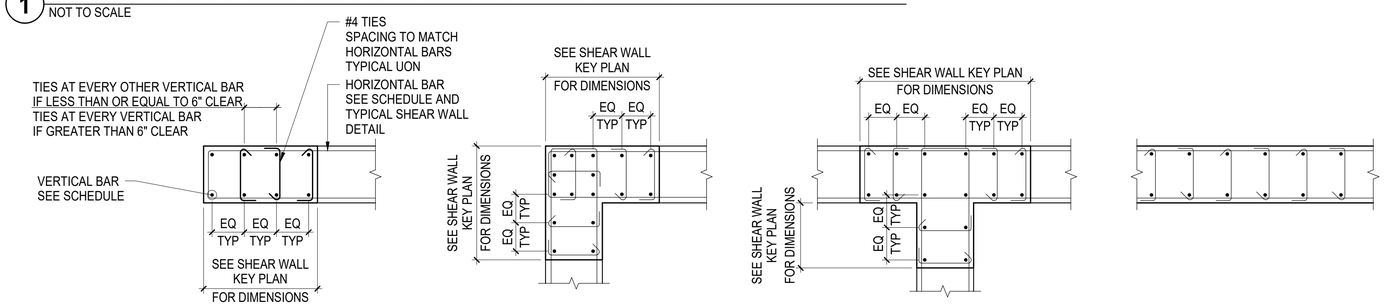

END OF WALL **CORNER INTERSECTION** **T- INTERSECTION** **TYPICAL WALL**

NOTES:

1. FOR INFORMATION NOT SHOWN, SEE END OF WALL DETAIL
2. TIES WITH 135 AND 90 DEGREE HOOKS TO ALTERNATE IN PLAN AND IN ELEVATION

2 FULLY TIED SHEAR WALL ZONES

NOT TO SCALE

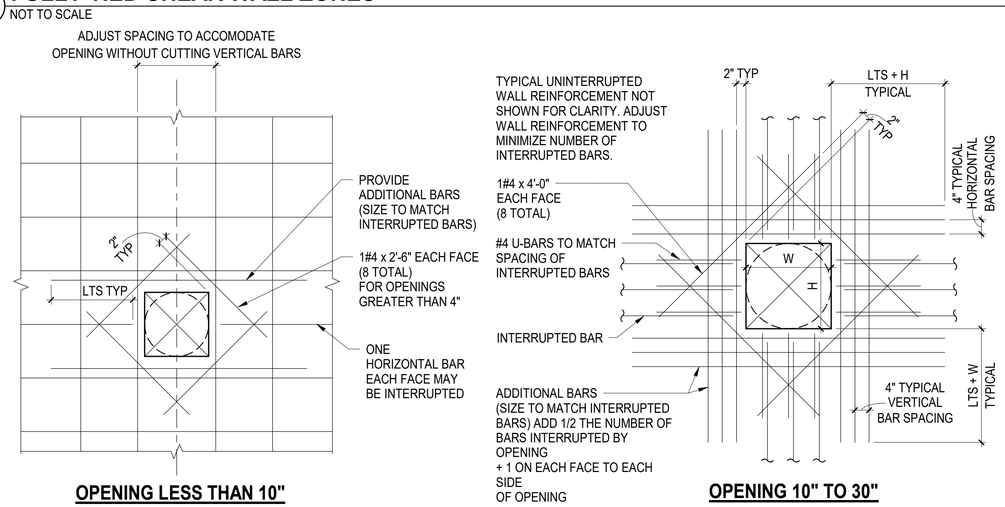

OPENING LESS THAN 10" **OPENING 10" TO 30"**

NOTES:

1. SHEAR WALL PENETRATIONS ARE SHOWN ON THE SHEAR WALL ELEVATIONS ADDITIONAL PENETRATIONS ARE NOT ALLOWED UNLESS APPROVED IN WRITING BY THE SER
2. FOR OPENINGS NOT SHOWN ON STRUCTURAL DRAWINGS, CONTRACTOR TO SUBMIT LOCATIONS AND SPACING TO SER FOR WRITTEN APPROVAL

3 TYPICAL SHEAR WALL OPENING DETAILS

NOT TO SCALE

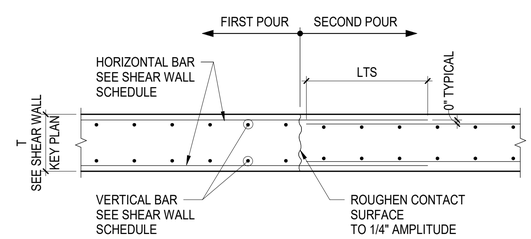

NOTE:

1. VERTICAL CONSTRUCTION JOINTS AS INDICATED ON PLAN OR GENERAL NOTES ADDITIONAL JOINTS ARE NOT ALLOWED UNLESS APPROVED IN WRITING BY SER

4 TYPICAL SHEAR WALL CONSTRUCTION JOINT

NOT TO SCALE

Client:

RANGER PROPERTIES
4790 BROADWAY
NEW YORK, NY 10034

Architect / Engineer:

FOGARTY FINGER architecture | interiors
69 Walker St, New York, NY 10013
t 212 966 7450 f 212 966 7444

Library Architect:

Andrew Berman Architect, PLLC
77 Chambers Street, 4th Floor
New York, NY 10007
Tel 212.226.5998

Structural:

Thornton Tomasetti
51 Madison Avenue
New York, NY 10010
Tel 917.661.7800

MEP / FP:

Concessi Engineering, PC
499 7th Avenue, 11th Floor South Tower
New York, NY 10018
Tel 212.629.6810

FACADE:

SIMPSON GUMPERTZ & HEGER
550 7th Avenue, 10th Floor
New York, NY 10018
Tel 212.271.7000

CODE:

METROPOLIS
22 Courtland Street, 10th Floor
New York, NY 10007
Tel 212.233.6344

No.	Date	Issue
2	DD ESTIMATING	02.06.2019
1	SCHEMATIC DESIGN	11.20.2018

Project:

4790 BROADWAY
NEW YORK, NY 10034

Drawing Title:

TYPICAL CONCRETE SHEAR WALL DETAILS

Seal & Signature:

DATE (MM-DD-YY): 02/06/19
PROJECT No.: N18168.00
DRAWING BY: AP
CHK BY: SB
DWG. No.: S-302.00
CADD FILE No.:

C:\Sorato\N18168.00_4790 BROADWAY_R19_CW.rvt

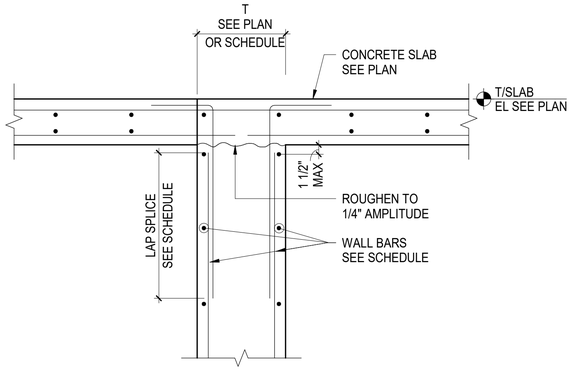

1 TYPICAL TOP OF WALL AND SHEAR WALL WITH CONCRETE SLAB

NOT TO SCALE

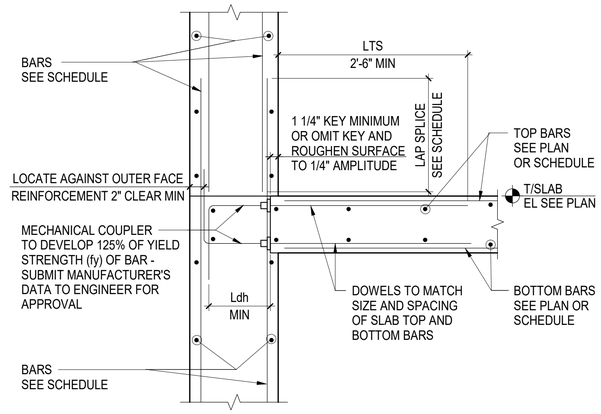

C OPTION C - MECHANICAL COUPLERS

(IN WALL POURED
MONOLITHIC)

NOTE:

1. FOR OPTIONS B, C, AND D MIRROR ALL DOWELS AND KEY FOR SLAB ON OPPOSITE SIDE

2 TYPICAL CONCRETE SLAB OR BEAM SUPPORT DETAILS AT WALL AND SHEAR WALL

NOT TO SCALE

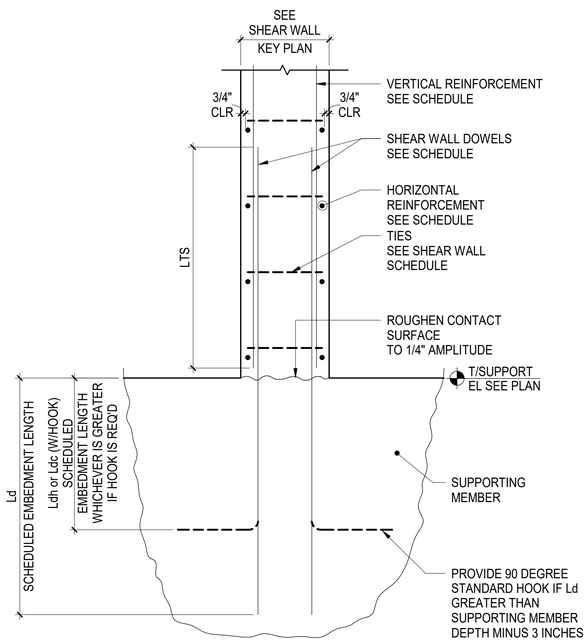

3 TYPICAL BOTTOM OF SHEAR WALL

NOT TO SCALE

Client:

RANGER PROPERTIES
4790 BROADWAY
NEW YORK, NY 10034

Architect / Engineer:

FOGARTY FINGER
architecture | interiors

69 Walker St, New York, NY 10013
t 212 966 7450 f 212 966 7444

Library Architect:

Andrew Berman Architect, PLLC
77 Chambers Street, 4th Floor
New York, NY 10007
Tel 212.226.5998

Structural:

Thornton Tomasetti
51 Madison Avenue
New York, NY 10010
Tel 917.661.7800

MEP / FP:

Concessi Engineering, PC
499 7th Avenue, 11th Floor South Tower
New York, NY 10018
Tel 212.629.6810

FACADE:

SIMPSON GUMPERTZ & HEGER
550 7th Avenue, 10th Floor
New York, NY 10018
Tel 212.271.7000

CODE:

METROPOLIS
22 Courtland Street, 10th Floor
New York, NY 10007
Tel 212.233.6344

No.	Date	Issue
2	DD ESTIMATING	02.06.2019
1	SCHEMATIC DESIGN	11.20.2018

Project:

4790 BROADWAY
NEW YORK, NY 10034

Drawing Title:

TYPICAL CONCRETE
SHEAR WALL DETAILS

Seal & Signature:

DATE (MM-DD-YY): 02/06/19
PROJECT No.: N18168.00
DRAWING BY: AP
CHK BY: SB
DWG. No.: S-303.00
CADD FILE No.:

C:\Scratch\N18168.00_4790 BROADWAY_R19_CWard.rvt

FLOOR	CONCRETE STRENGTH	REBAR GRADE	1	2	3	4	5	6	7	8	9	10	11	12
BULKHEAD														
ROOF	5000 PSI	A615 GR. 60												
14										25 15 14X14 4 #9 #3@14"	50 25 14X24 6 #7 #3@14"	20 15 14X14 4 #9 #3@14"		
13										50 20	95 30	45 20		
12										70 25	135 35	70 20		
11										95 25	180 45	90 25		
10										115 30	220 50	115 30		
9										140 35	265 55	135 30		
8										160 35	305 60	160 35		
7										185 40	345 60	180 35		
6										205 40	385 65	205 40		
5										225 45	425 70	225 40		
4										250 45	465 75	250 45		
3										270 50 14X14 4 #9 #3@14"	505 80 6 #7 #3@14"	270 45 14X14 4 #9 #3@14"		
2	6000 PSI								55 15 14X24 6 #9 #3@14"	325 60 14X24 8 #9 #3@14"	570 85 8 #9 #3@14"	320 50 18X28 6 #9 #3@18"	50 10 14X24 6 #7 #3@14"	100 50 14X24 8 #9 #3@14"
1			65 25 14X24 6 #7 #3@14"	90 35 14X24 6 #7 #3@14"	80 30 14X24 6 #7 #3@14"	55 25 14X24 6 #7 #3@14"	65 30 14X28 6 #9 #3@14"	50 25 20X20 8 #7 #3@14"	160 40	425 85 D24 8 #9 #3@18"	660 110	425 80	135 35	205 80
CELLAR			135 45	185 60	170 55	115 45	135 50	110 40	230 65	495 105	770 140	475 90	230 65	300 105
FOUNDATION			135 45 14X24 6 #7 #3@14"	185 60 14X24 6 #7 #3@14"	170 55 14X24 6 #7 #3@14"	115 45 14X24 6 #7 #3@14"	135 50 14X28 6 #9 #3@14"	110 40 20X20 8 #7 #3@14"	230 65 14X24 6 #9 #3@14"	495 105 D24 8 #9 #3@18"	770 140 14X24 8 #9 #3@14"	475 90 18X28 6 #9 #3@18"	230 65 14X24 6 #7 #3@14"	300 105 14X24 8 #9 #3@14"

FLOOR	13	14	15	16	16A	17	18	19	19A	20
BULKHEAD										
ROOF		15 0 24X24 8 #9 #3@18"								
14	30 20 14X14 4 #9 #3@14"	55 20	85 40 16X26 8 #9 #3@16"	45 25 16X28 6 #9 #3@16"					25 20 14X14 4 #9 #3@14"	
13	70 30	95 30	155 55	90 35				40 20 14X14 4 #9 #3@14"		
12	105 35	135 35	220 65	135 40				65 25		
11	135 40	175 40	290 75	180 45				85 25		
10	170 45	215 45	355 85	225 50				110 30		
9	200 50	255 50	425 95	270 55				130 30		
8	230 55	295 50	490 105	310 60				155 35		
7	265 60	335 55	560 115	355 65				175 35		
6	295 60	375 60	625 125	400 70				200 40		
5	325 65	415 65	695 135	440 75				220 40		
4	360 70	455 70	760 145	485 80				245 45		
3	390 70 14X14 4 #9 #3@14"	495 70	830 150 16X26 8 #9 #3@16"	525 85				265 45 14X14 4 #9 #3@14"		
2	455 95 14X24 6 #9 #3@14"	865 140	880 160 16X32 6 #9 #3@16"	595 95	25 10 14X24 6 #7 #3@14"	40 10 14X24 6 #7 #3@14"	105 55 14X24 6 #9 #3@14"	360 80 14X24 6 #9 #3@14"		305 55 20X24 6 #9 #3@18"
1	550 115 D24 8 #9 #3@18"	940 155	985 185	675 115	115 40	100 30	190 75	440 105		370 70
CELLAR	635 140	1030 180	1055 200	715 125	120 40	125 30	260 95	505 120		430 90
FOUNDATION	635 140 D24 8 #9 #3@18"	1030 180 24X24 8 #9 #3@18"	1055 200 16X32 6 #9 #3@16"	715 125 16X28 6 #9 #3@16"	120 40 14X24 6 #7 #3@14"	125 30 14X24 6 #7 #3@14"	260 95 14X24 6 #9 #3@14"	505 120 14X24 6 #9 #3@14"		430 90 20X24 6 #9 #3@18"

FLOOR	20A	21	21A	22	22A	23	24	25	25A	26	26A
BULKHEAD											
ROOF											
14	70 30 14X24 6 #7 #3@14"	95 55 16X28 6 #9 #3@16"	70 45 14X14 4 #9 #3@14"	85 50 20X28 8 #9 #3@18"							
13	120 40	180 85	75 45	170 80				45 20 14X14 4 #9 #3@14"	55 25 14X18 6 #7 #3@14"	60 30 14X18 6 #7 #3@14"	65 30 14X18 6 #7 #3@14"
12	165 50	245 95	75 45	240 90				80 25	95 30	100 40	105 40
11	215 60	305 105	80 45	310 100				110 30	135 35	140 45	145 45
10	260 65	370 115	80 45	380 105				140 35	170 45	185 55	185 55
9	310 75	430 125	85 45	450 115				170 40	210 50	230 60	225 60
8	355 80	495 135	85 45	515 120				200 45	245 55	270 65	270 65
7	400 85	560 145	85 45	585 130				230 50	285 55	315 75	310 75
6	450 95	620 150	90 45	650 140				260 50	320 60	360 80	350 80
5	495 100	685 160	90 45	720 145				290 55	360 65	405 85	390 85
4	540 105	745 170	95 45	785 155				320 60	395 70	445 95	430 90
3	585 115 14X24 6 #7 #3@14"	810 180 16X28 6 #9 #3@16"	95 45	855 160 20X28 8 #9 #3@18"				350 65 14X14 4 #9 #3@14"	435 75 14X18 6 #7 #3@14"	490 100 14X18 6 #7 #3@14"	470 95 14X18 6 #7 #3@14"
2		875 190 16X32 6 #9 #3@16"	100 45	920 170 20X24 8 #9 #3@18"	40 10 20X24 6 #9 #3@18"	50 10 14X24 6 #7 #3@14"	80 45 14X24 6 #7 #3@14"	420 85 14X24 6 #9 #3@14"	520 100 16X26 6 #9 #3@16"	535 105 14X24 8 #9 #3@14"	520 105 16X26 6 #9 #3@16"
1		965 210	105 45	1025 195	105 35	105 25	140 60	430 85	600 120	600 120	590 120
CELLAR		1075 240	105 45	1090 215	185 65	170 40	195 75	495 105	665 140	660 135	660 135
FOUNDATION		1075 240 16X32 6 #9 #3@16"	105 45 14X14 4 #9 #3@14"	1090 215 20X24 8 #9 #3@18"	185 65 20X24 6 #9 #3@18"	170 40 14X24 6 #7 #3@14"	195 75 14X24 6 #7 #3@14"	495 105 14X24 6 #9 #3@14"	665 140 16X26 6 #9 #3@16"	660 135 14X24 8 #9 #3@14"	660 135 16X26 6 #9 #3@16"

FLOOR	27	28	28A	29	30	31	32	32A	33	REBAR GRADE	CONCRETE STRENGTH
BULKHEAD											
ROOF						70 15 20X28 6 #9 #3@18"		65 20 14X14 4 #9 #3@14"		A615 GR. 60	5000 PSI
14	105 40 24X24 8 #9 #3@18"	65 40 16X28 6 #9 #3@16"		25 20 14X14 4 #9 #3@14"	45 35 14X14 4 #9 #3@14"	180 65	165 65 24X24 8 #9 #3@18"		60 40 18X24 6 #9 #3@18"		
13	195 70	130 65		50 25	70 40	255 80	255 85		115 50		
12	265 85	180 70		75 30	100 45	320 90	340 95		165 55		
11	330 95	230 80		95 30	125 50	385 100	425 105		215 65		
10	400 105	285 85		120 35	155 55	455 110	510 115		260 70		
9	470 115	335 90		140 40	185 60	520 120	590 125		310 75		
8	540 125	390 95		165 40	215 65	590 130	670 135		360 80		
7	610 135	440 105		185 45	245 70	655 135	755 145		410 90		
6	680 145	490 110		210 45	270 75	725 145	835 155		460 95		
5	750 150	545 115		230 50	300 80	790 155	915 165		505 100		
4	820 160	595 120		255 50	330 85	860 165	995 175		555 105		
3	890 170	645 125 16X28 6 #9 #3@16"		275 55 14X14 4 #9 #3@14"	360 90 14X14 4 #9 #3@14"	925 175	1080 185 24X24 8 #9 #3@18"		605 110 18X24 6 #9 #3@18"		
2	965 180	735 140 20X24 6 #9 #3@18"	65 15 20X24 6 #9 #3@18"	310 60 14X20 6 #7 #3@14"	420 105 18X24 6 #9 #3@18"	995 185	1140 190 20X24 8 #9 #3@18"		665 115 20X24 6 #9 #3@18"		6000 PSI
1	1070 205	840 165	100 25	355 65	495 120	1080 205	1270 220		705 120		
CELLAR	1145 225	960 195	170 50	390 75	555 135	1190 235	1390 250		800 140		
FOUNDATION	1145 225 24X24 8 #9 #3@18"	960 195 20X24 6 #9 #3@18"	170 50 20X24 6 #9 #3@18"	390 75 14X20 6 #7 #3@14"	555 135 18X24 6 #9 #3@18"	1190 235 20X28 6 #9 #3@18"	1390 250 20X24 8 #9 #3@18"		800 140 20X24 6 #9 #3@18"		

COLUMN NOTES:

1. FOR TOP OF STRUCTURAL SLAB ELEVATIONS SEE PLANS
2. PROVIDE COMPRESSION LAP SPLICE AT ALL VERTICAL BARS UNLESS OTHERWISE NOTED
   SEE COLUMN LAP SPLICE SCHEDULE FOR SPLICE LENGTH
3. AT COLUMNS DESIGNATED AS TENSION (T) PROVIDE TENSION LAP SPLICE AT ALL VERTICAL BARS
   SEE COLUMN LAP SPLICE LENGTH SCHEDULE FOR SPLICE LENGTH
4. PROVIDE #4@12" TIES UNLESS OTHERWISE NOTED
   TIE SPACING IS NOT TO EXCEED LEAST COLUMN DIMENSION OR 16 VERTICAL BAR DIAMETERS
5. COLUMN SIZES SHOWN ARE PLAN DIMENSIONS IN INCHES
   FOR COLUMN ORIENTATION SEE PLAN
6. COLUMN LOADS SHOWN ON SCHEDULE ARE AS FOLLOWS:

   XXX = SERVICE AXIAL DEAD LOAD IN KIPS x 1.2
   XXX = SERVICE AXIAL LIVE LOAD IN KIPS x 1.6
7. WHERE SCHEDULED INFORMATION IS NOT SHOWN SEE FLOOR BELOW

COLUMN LEGEND:

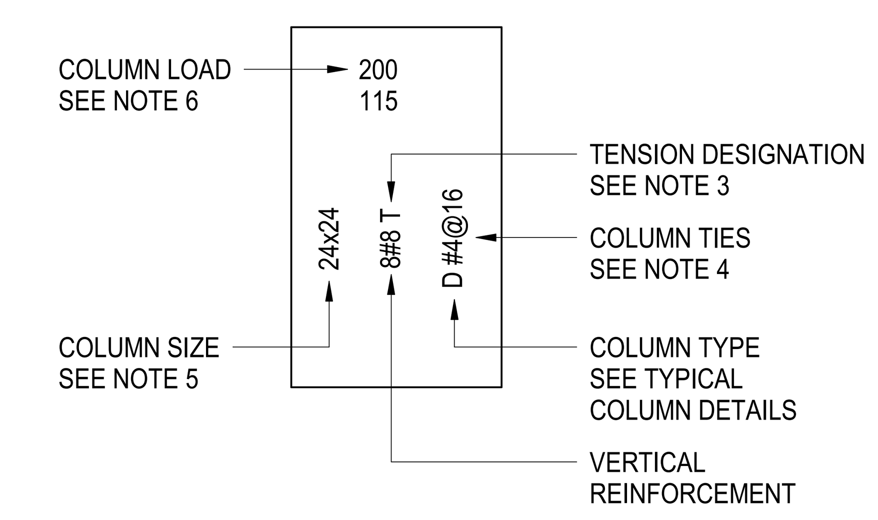

Client:

RANGER PROPERTIES
4790 BROADWAY
NEW YORK, NY 10034

Architect / Engineer:

FOGARTY FINGER architecture | interiors
69 Walker St, New York, NY 10013
t 212 966 7450 f 212 966 7444

Library Architect:

Andrew Berman Architect, PLLC
77 Chambers Street, 4th Floor
New York, NY 10007
Tel 212.226.5998

Structural:

Thornton Tomasetti
51 Madison Avenue
New York, NY 10010
Tel 917.661.7800

MEP / FP:

Concessi Engineering, PC
499 7th Avenue, 11th Floor South Tower
New York, NY 10018
Tel 212.629.6810

FACADE:

SIMPSON GUMPERTZ & HEGER
550 7th Avenue, 10th Floor
New York, NY 10018
Tel 212.271.7000

CODE:

METROPOLIS
22 Courtland Street, 10th Floor
New York, NY 10007
Tel 212.233.6344

No.	Date	Issue
2	DD ESTIMATING	02.06.2019
1	SCHEMATIC DESIGN	11.20.2018

Project:

4790 BROADWAY
NEW YORK, NY 10034

Drawing Title:

COLUMN SCHEDULE

Seal & Signature:

DATE (MM-DD-YY): 02/06/19
PROJECT No.: N18168.00
DRAWING BY: Author
CHK BY: Checker
DWG. No.: **S-400.00**
CADD FILE No.:

C:\Scratch\N18168.00_4790 BROADWAY_R19_CWard.rvt

FLOOR	DL	REBAR GRADE / COLUMN MARK	34	35	36	37	37A	38	39	39A	40	41	42	42A	43	44	45	45A	45B	46	46A	46B	47	47A	48	48A	49	50	50A	50B	51	52	53	54	55	56	57	58	58A	59	60	60A	61	49A	REBAR GRADE / COLUMN MARK	CONCRETE STRENGTH	FLOOR
BULKHEAD								55 15		45 15																																					BULKHEAD
ROOF								10X28 6 #9 #3@18"		14X14 4 #9 #3@14"																																			ROOF
14					35 30 14X18 6 #9 #3@14"	65 45 14X24 6 #7 #3@14"	60 40 14X18 6 #9 #3@14"	160 65	165 75 20X28 12 #9 #3@18"		80 50 18X24 6 #9 #3@18"	40 30 14X14 4 #9 #3@14"				60 40 14X30 6 #9 #3@14"			70 45 14X24 6 #7 #3@14"			60 40 14X24 6 #7 #3@14"	75 45 14X28 8 #9 #3@14"		60 40 14X28 6 #9 #3@14"		55 40 14X28 6 #9 #3@14"			25 25 14X14 4 #9 #3@14"														14
13					70 35	105 50	100 50	225 75	255 90		135 60	70 35				110 45			125 55			110 50	135 55		115 50		105 45			55 30																13
12					105 40	145 60	135 55	290 85	345 105		190 70	95 40				160 55			180 65			160 55	195 65		170 55		155 55			80 30																12
11					140 45	190 65	175 65	355 95	430 115		240 80	120 45				210 60			235 70 14X24 6 #7 #3@14"			210 65 14X24 6 #7 #3@14"	255 75		220 65		200 60			105 35 14X14 4 #9 #3@14"																11
10					175 50	230 75	210 70	425 105	520 130		305 90	150 50		30 10 14X14 4 #9 #3@14"		260 65			220 60 14X24 6 #7 #3@14"		260 70 14X24 6 #7 #3@14"		315 80		275 75		300 85		115 35 14X14 4 #9 #3@14"			35 10 14X30 6 #9 #3@14"	120 30 14X24 6 #7 #3@14"	40 10 14X14 4 #9 #3@14"	40 10 14X28 6 #7 #3@14"	35 10 14X14 4 #9 #3@14"	35 10 14X14 4 #9 #3@14"		40 10 14X24 6 #7 #3@14"			25 5 14X14 4 #9 #3@14"	30 10 14X24 6 #7 #3@14"		10
9	5000 PSI				210 55	270 80	245 75	495 115	605 140		365 95	180 50		55 10		310 75			280 70			310 80	375 90		335 80		365 95			160 40			70 15	165 35	75 15	80 15	70 15	70 15		75 15			50 10	60 15		5000 PSI		9
8					240 55	305 85	280 80	565 125	690 150		425 105	210 55		80 15		360 80			340 80			360 85	435 100		390 90		425 100			200 50			100 20	215 45	110 20	115 20	105 20	105 20		110 20				75 15	85 20				8
7		A615 GR. 60			275 60	345 90	315 85	635 135	780 165		485 115	235 60		105 20		405 85			395 90			415 95	495 110		450 100		490 110			245 55			135 25	260 50	145 25	155 25	140 25	140 25		145 25				100 15	110 20		A615 GR. 60		7
6					310 65	385 95	350 90	700 145	865 175		545 125	265 65		130 25		455 90			455 95			465 100	555 120		505 105		555 120			290 65			165 25	305 55	180 30	190 30	175 30	175 30		180 30				125 20	140 25				6
5					345 70	425 100	385 95	770 150	950 190		610 130	295 65		155 25		505 95			510 105			515 110	615 125		565 115		620 130			335 70			200 30	350 60	215 35	230 35	205 35	210 35		215 35				150 20	165 30				5
4					375 75	465 110	420 100	840 160	1040 200		670 140	325 70		185 30		550 100			570 115			565 115	675 135		620 125		680 140			380 80			230 35	400 65	250 40	265 40	240 35	240 40		245 35				170 25	195 30				4
3					410 75 14X18 6 #9 #3@14"	505 115 14X24 6 #7 #3@14"	455 105 14X18 6 #9 #3@14"	910 170 18X28 10 #9 #3@18"	1125 215 20X28 12 #9 #3@18"		730 150 18X24 6 #9 #3@18"	350 70 14X14 4 #9 #3@14"		205 30 14X14 4 #9 #3@14"		600 105			625 120 14X24 6 #7 #3@14"			615 125 14X24 6 #7 #3@14"	730 145 14X28 8 #9 #3@14"		675 130 14X28 6 #9 #3@14"		740 150 14X28 6 #9 #3@14"		420 85 14X14 4 #9 #3@14"			285 35 14X30 6 #9 #3@14"	445 70 14X24 6 #7 #3@14"	285 45 14X14 4 #9 #3@14"	300 45 14X24 6 #7 #3@14"	275 40 14X14 4 #9 #3@14"	275 45 14X14 4 #9 #3@14"		280 40 14X24 6 #7 #3@14"				195 25 14X14 4 #9 #3@14"	220 35 14X24 6 #7 #3@14"				3
2			50 10 14X24 6 #7 #3@14"	50 10 14X24 6 #7 #3@14"	450 80 14X24 6 #9 #3@14"	555 120 18X26 6 #9 #3@18"	495 110 14X24 6 #9 #3@14"	970 180 20X28 8 #9 #3@18"	1185 220 20X28 8 #9 #3@18"		775 155 20X24 6 #9 #3@18"	460 90 20X24 6 #9 #3@18"	165 35 14X24 6 #9 #3@18"		45 10 14X24 6 #7 #3@14"	655 110 14X30 6 #9 #3@14"	440 85 18X24 6 #9 #3@18"				330 65 18X24 6 #9 #3@18"			465 90 20X24 6 #9 #3@18"		430 80 20X24 6 #9 #3@18"		290 55 18X24 6 #9 #3@18"				185 35 18X24 6 #9 #3@18"	305 40 18X30 6 #9 #3@18"	735 120 20X24 6 #9 #3@18"	685 115 20X24 6 #9 #3@18"	700 115 20X24 6 #9 #3@18"	640 105 20X24 16 #9 #3@18"	660 115 20X24 16 #9 #3@18"	270 45 14X24 6 #7 #3@14"		195 35 18X16 6 #7 #3@14"	140 20 14X18 6 #7 #3@14"		260 40 14X28 8 #9 #3@14"	455 90 20X24 6 #9 #3@18"	2
1	6000 PSI		120 30	110 30	510 90	620 135	540 120	1035 195	1235 235		805 160	505 100	230 55		125 35	735 125	520 105				395 80			510 100		465 90		330 75				230 55	355 50	825 135	770 135	765 125	670 105	685 115	320 60		245 50	170 30		300 45	480 95		6000 PSI		1
CELLAR			145 30	165 40	560 100	680 150	575 130	1095 210	1310 250		860 175	540 110	260 65		145 35	805 140	590 120				455 100			585 115		535 105		380 90				265 65	405 55	905 150	855 150	850 140	755 120	740 125	360 70		285 60	185 30		325 45	535 105				CELLAR
FOUNDATION			145 30 14X24 6 #7 #3@14"	165 40 14X24 6 #7 #3@14"	560 100 14X24 6 #9 #3@14"	680 150 18X26 6 #9 #3@18"	575 130 14X24 8 #9 #3@14"	1095 210 20X28 8 #9 #3@18"	1310 250 20X24 8 #9 #3@18"		860 175 20X24 8 #9 #3@18"	540 110 20X24 6 #9 #3@18"	260 65 18X24 6 #9 #3@18"		145 35 14X24 6 #7 #3@14"	805 140 14X30 6 #9 #3@14"	590 120 18X24 6 #9 #3@18"				455 100 18X24 6 #9 #3@18"			585 115 20X24 6 #9 #3@18"		535 105 20X24 6 #9 #3@18"		380 90 18X24 6 #9 #3@18"				265 65 18X24 6 #9 #3@18"	405 55 18X30 6 #9 #3@18"	905 150 20X24 6 #9 #3@18"	855 150 20X24 6 #9 #3@18"	850 140 20X24 6 #9 #3@18"	755 120 20X24 16 #9 #3@18"	740 125 20X24 16 #9 #3@18"	360 70 14X24 6 #7 #3@14"		285 60 18X16 6 #7 #3@14"	185 30 14X16 6 #7 #3@14"		325 45 14X28 8 #9 #3@14"	535 105 20X24 6 #9 #3@18"				FOUNDATION
FLOOR	CONCRETE STRENGTH	REBAR GRADE / COLUMN	34	35	36	37	37A	38	39	39A	40	41	42	42A	43	44	45	45A	45B	46	46A	46B	47	47A	48	48A	49	50	50A	50B	51	52	53	54	55	56	57	58	58A	59	60	60A	61	49A	REBAR GRADE / COLUMN MARK	CONCRETE STRENGTH	FLOOR

COLUMN NOTES:

1. FOR TOP OF STRUCTURAL SLAB ELEVATIONS SEE PLANS
2. PROVIDE COMPRESSION LAP SPLICE AT ALL VERTICAL BARS UNLESS OTHERWISE NOTED
   SEE COLUMN LAP SPLICE SCHEDULE FOR SPLICE LENGTH
3. AT COLUMNS DESIGNATED AS TENSION (T) PROVIDE TENSION LAP SPLICE AT ALL VERTICAL BARS
   SEE COLUMN LAP SPLICE LENGTH SCHEDULE FOR SPLICE LENGTH
4. PROVIDE #4@12" TIES UNLESS OTHERWISE NOTED
   TIE SPACING IS NOT TO EXCEED LEAST COLUMN DIMENSION OR 16 VERTICAL BAR DIAMETERS
5. COLUMN SIZES SHOWN ARE PLAN DIMENSIONS IN INCHES
   FOR COLUMN ORIENTATION SEE PLAN
6. COLUMN LOADS SHOWN ON SCHEDULE ARE AS FOLLOWS:

   XXX = SERVICE AXIAL DEAD LOAD IN KIPS x 1.2
   XXX = SERVICE AXIAL LIVE LOAD IN KIPS x 1.6

7. WHERE SCHEDULED INFORMATION IS NOT SHOWN SEE FLOOR BELOW

COLUMN LEGEND:

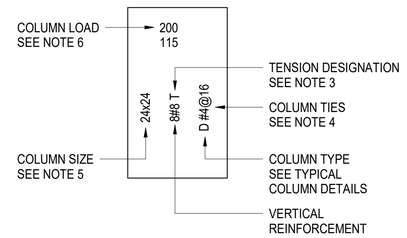

Client:

RANGER PROPERTIES
4790 BROADWAY
NEW YORK, NY 10034

Architect / Engineer:

FOGARTY FINGER
architecture | interiors
69 Walker St, New York, NY 10013
t 212 966 7450 f 212 966 7444

Library Architect:

Andrew Berman Architect, PLLC
77 Chambers Street, 4th Floor
New York, NY 10007
Tel 212.226.5998

Structural:

Thornton Tomasetti
51 Madison Avenue
New York, NY 10010
Tel 917.661.7800

MEP / FP:

Concessi Engineering, PC
499 7th Avenue, 11th Floor South Tower
New York, NY 10018
Tel 212.629.6810

FACADE:

SIMPSON GUMPERTZ & HEGER
550 7th Avenue, 10th Floor
New York, NY 10018
Tel 212.271.7000

CODE:

METROPOLIS
22 Courtland Street, 10th Floor
New York, NY 10007
Tel 212.233.6344

No.	Date	Issue
2	DD ESTIMATING	02.06.2019
1	SCHEMATIC DESIGN	11.20.2018

Project:

4790 BROADWAY
NEW YORK, NY 10034

Drawing Title:

COLUMN SCHEDULE

Seal & Signature:

DATE (MM-DD-YY): 02/06/19
PROJECT No.: N18168.00
DRAWING BY: Author
CHK BY: Checker
DWG. No.: **S-401.00**
CADD FILE No.:

C:\Scratch\N18168.00_4790 BROADWAY_R19_CWard.rvt

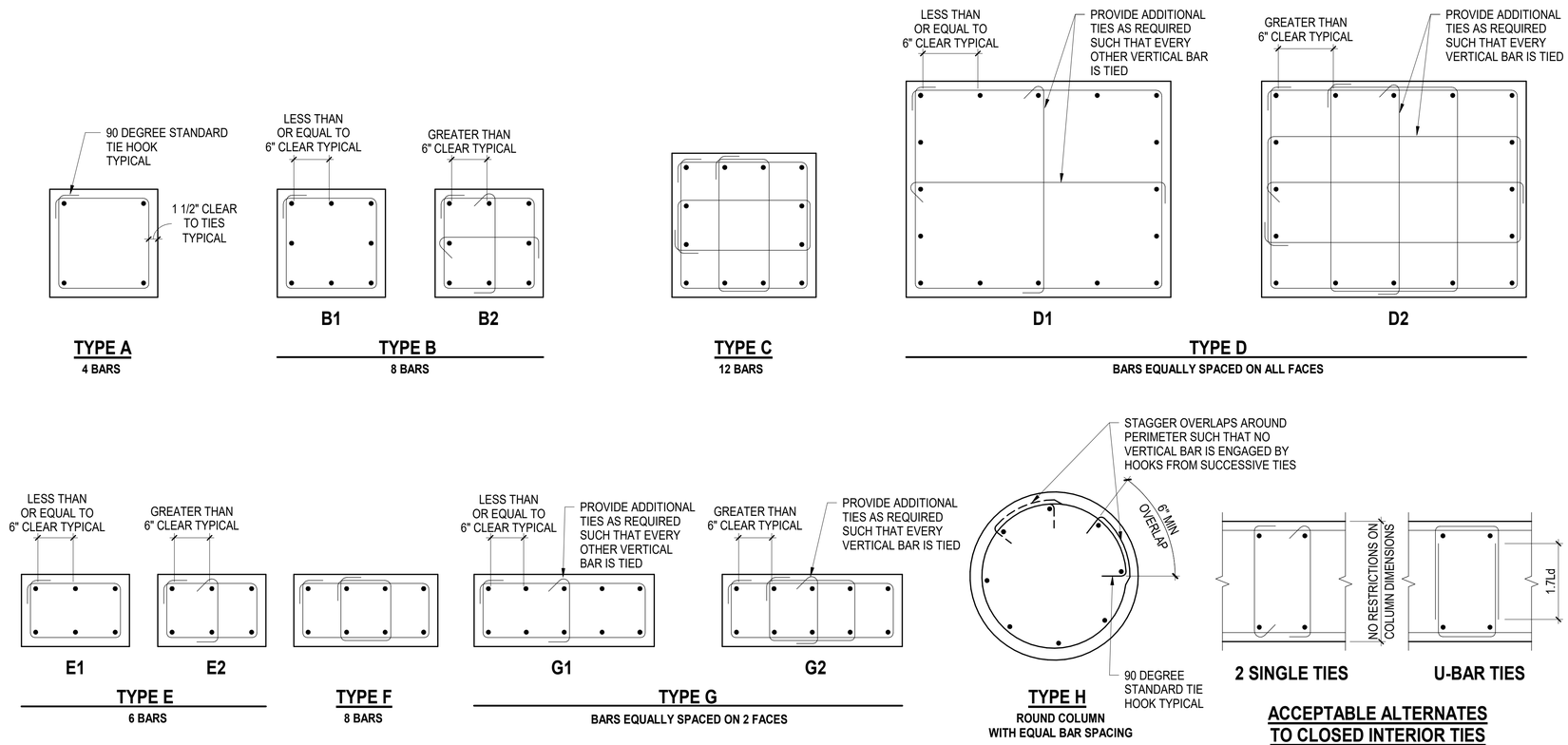

NOTES:

1. FOR ALL TYPES STAGGER ALL TIE HOOKS
2. FOR TYPE **D** TOTAL NUMBER OF BARS SHOULD BE SPACED AROUND PERIMETER IN SUCH A WAY AS TO ACHIEVE APPROXIMATELY EQUAL SPACING
3. FOR TYPE **G** TOTAL NUMBER OF BARS SHOULD BE SPACED AROUND PERIMETER IN SUCH A WAY AS TO ACHIEVE EQUAL SPACING ON THE TWO LONG SIDES

1 COLUMN TYPES - BAR ARRANGEMENT
NOT TO SCALE

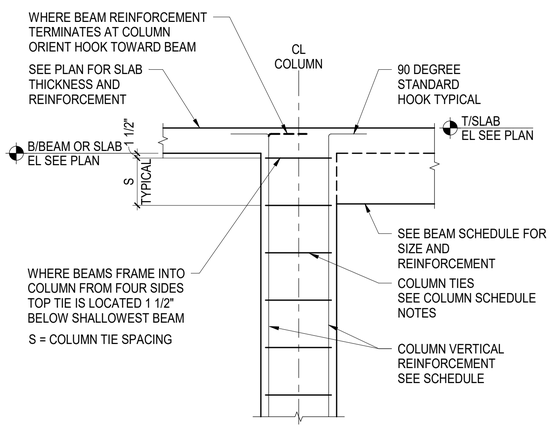

2 TYPICAL TOP OF COLUMN
NOT TO SCALE

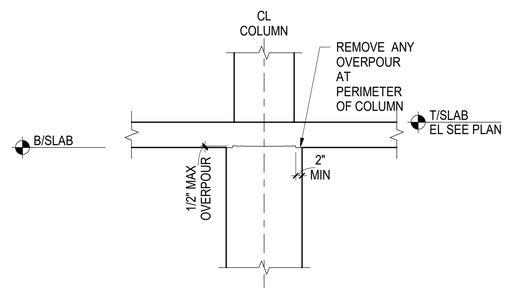

3 TYPICAL COLUMN OVERPOUR TOLERANCE
NOT TO SCALE

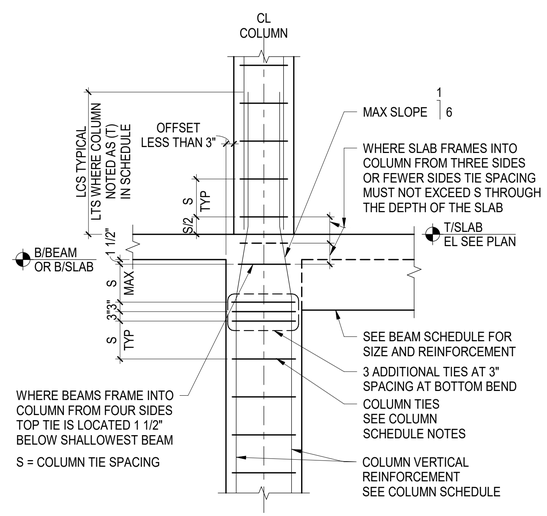

4 TYPICAL COLUMN OFFSET LESS THAN 3"
NOT TO SCALE

Client:
RANGER PROPERTIES
4790 BROADWAY
NEW YORK, NY 10034

Architect / Engineer:
FOGARTY FINGER architecture | interiors
69 Walker St, New York, NY 10013
t 212 966 7450 f 212 966 7444

Library Architect:
Andrew Berman Architect, PLLC
77 Chambers Street, 4th Floor
New York, NY 10007
Tel 212.226.5998

Structural:
Thornton Tomasetti
51 Madison Avenue
New York, NY 10010
Tel 917.661.7800

MEP / FP:
Concessi Engineering, PC
499 7th Avenue, 11th Floor South Tower
New York, NY 10018
Tel 212.629.6810

FACADE:
SIMPSON GUMPERTZ & HEGER
550 7th Avenue, 10th Floor
New York, NY 10018
Tel 212.271.7000

CODE:
METROPOLIS
22 Courtland Street, 10th Floor
New York, NY 10007
Tel 212.233.6344

No.	Date	Issue
2	DD ESTIMATING	02.06.2019
1	SCHEMATIC DESIGN	11.20.2018

Project:
4790 BROADWAY
NEW YORK, NY 10034

Drawing Title:
TYPICAL CONCRETE COLUMN DETAILS-I

Seal & Signature:

DATE (MM-DD-YY): 02/06/19
PROJECT No.: N18168.00
DRAWING BY: AP
CHK BY: SB
DWG. No.: S-402.00
CADD FILE No.:

C:\Scratch\N18168.00_4790 BROADWAY_R19_CWard.rvt

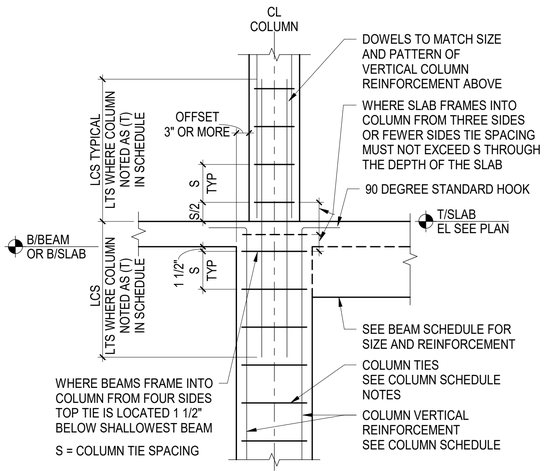

1 TYPICAL COLUMN OFFSET 3" OR MORE

NOT TO SCALE

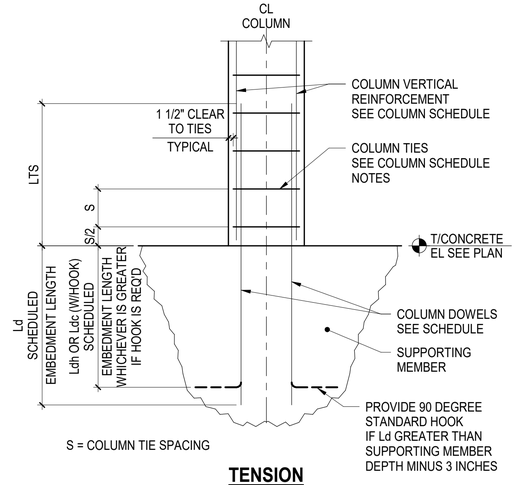

TENSION

WHERE COLUMN NOTED AS (T) IN SCHEDULE

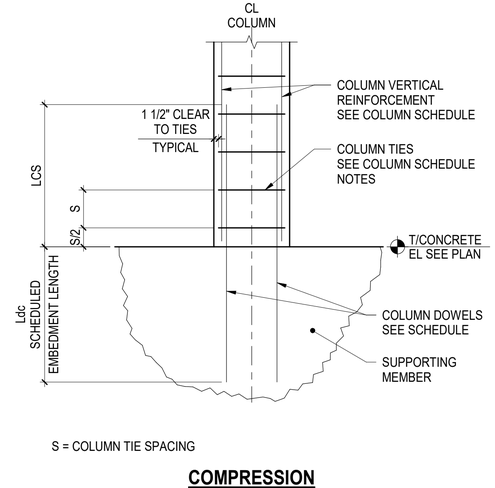

COMPRESSION

TYPICAL UON

2 TYPICAL BOTTOM OF COLUMN

NOT TO SCALE

Client:

RANGER PROPERTIES
4790 BROADWAY
NEW YORK, NY 10034

Architect / Engineer:

FOGARTY FINGER
architecture | interiors

69 Walker St, New York, NY 10013
t 212 966 7450 f 212 966 7444

Library Architect:

Andrew Berman Architect, PLLC
77 Chambers Street, 4th Floor
New York, NY 10007
Tel 212.226.5998

Structural:

Thornton Tomasetti
51 Madison Avenue
New York, NY 10010
Tel 917.661.7800

MEP / FP:

Concessi Engineering, PC
499 7th Avenue, 11th Floor South Tower
New York, NY 10018
Tel 212.629.6810

FACADE:

SIMPSON GUMPERTZ & HEGER
550 7th Avenue, 10th Floor
New York, NY 10018
Tel 212.271.7000

CODE:

METROPOLIS
22 Courtland Street, 10th Floor
New York, NY 10007
Tel 212.233.6344

No.	Date	Issue
2	DD ESTIMATING	02.06.2019
1	SCHEMATIC DESIGN	11.20.2018

Project:

4790 BROADWAY
NEW YORK, NY 10034

Drawing Title:

TYPICAL CONCRETE COLUMN DETAILS-II

Seal & Signature:

DATE (MM-DD-YY):	02/06/19
PROJECT No.:	N18168.00
DRAWING BY:	Author
CHK BY:	Checker
DWG. No.:	S-403.00
CADD FILE No.:	

C:\Scratch\N18168.00_4790 BROADWAY_R19_CWard.rvt

CONCRETE BEAM SCHEDULE

f'c = SEE GENERAL NOTES

BEAM MARK	SIZE		REINFORCEMENT										REMARKS
			LEFT END TOP BARS		RIGHT END TOP BARS		BOTTOM BARS		SIDE BARS	STIRRUPS			
	W (IN)	H (IN)	LONG	SHORT	LONG	SHORT	LONG	SHORT	EACH FACE SEE NOTE 4	TYPE	SIZE	SPACING FROM EACH END	
TB1	48"	54"	-	-	-	-	-	-	-	-	-	-	-
TB2	48"	60"											
TB3	36"	30"											
TB4	24"	54"											

NOTES:

1. TOP OF BEAM IS ASSUMED TO BE TOP OF SLAB UON.
2. LEFT END AND RIGHT END OF BEAM ARE DEFINED ON BEAM ORIENTATION KEY PLAN
3. WHERE REINFORCEMENT IS NOTED AS "SEE ADJ BEAM", REINFORCEMENT IS TO BE CONTINUED FROM ADJACENT BEAM
4. SEE TYPICAL BEAM SECTION DETAIL WHERE NO SIDE BARS ARE INDICATED

REINFORCEMENT LEGEND:

1 CONCRETE BEAM SCHEDULE

NOT TO SCALE

Client:

RANGER PROPERTIES
4790 BROADWAY
NEW YORK, NY 10034

Architect / Engineer:

FOGARTY FINGER architecture | interiors
69 Walker St, New York, NY 10013
t 212 966 7450 f 212 966 7444

Library Architect:

Andrew Berman Architect, PLLC
77 Chambers Street, 4th Floor
New York, NY 10007
Tel 212.226.5998

Structural:

Thornton Tomasetti
51 Madison Avenue
New York, NY 10010
Tel 917.661.7800

MEP / FP:

Concessi Engineering, PC
499 7th Avenue, 11th Floor South Tower
New York, NY 10018
Tel 212.629.6810

FACADE:

SIMPSON GUMPERTZ & HEGER
550 7th Avenue, 10th Floor
New York, NY 10018
Tel 212.271.7000

CODE:

METROPOLIS
22 Courtland Street, 10th Floor
New York, NY 10007
Tel 212.233.6344

No.	Date	Issue
2	DD ESTIMATING	02.06.2019
1	SCHEMATIC DESIGN	11.20.2018

Project:

4790 BROADWAY
NEW YORK, NY 10034

Drawing Title:

CONCRETE BEAM SCHEDULES

Seal & Signature:

DATE (MM-DD-YY): 02/06/19
PROJECT No.: N18168.00
DRAWING BY: AP
CHK BY: SB
DWG. No.: S-404.00
CADD FILE No.:

C:\Scratch\N18168.00_4790 BROADWAY_R19_CWest.rvt

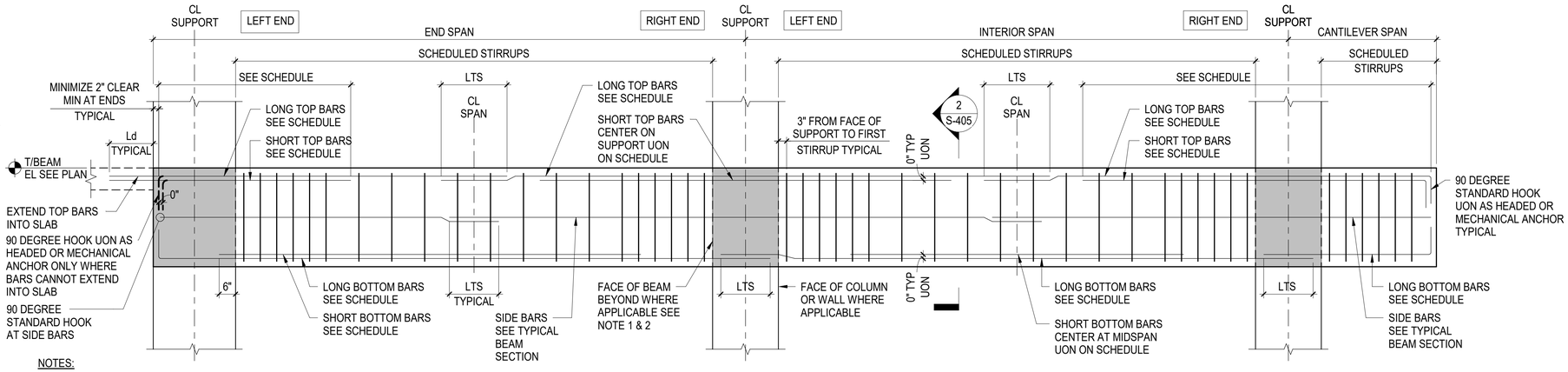

NOTES:

1. ELEVATION AS SHOWN REPRESENTS STIRRUP ARRANGEMENT AT COLUMN SUPPORTS
2. FOR STIRRUP ARRANGEMENT AT BEAM SUPPORT SEE TYPICAL DETAILS AT BEAM JOINT SUPPORT
3. CONTRACTOR TO MINIMIZE NUMBER OF SPLICES
4. IF SPLICES ARE REQUIRED THE SPLICES SHALL BE LOCATED WHERE INDICATED ON THIS DETAIL

1 TYPICAL BEAM ELEVATION

NOT TO SCALE

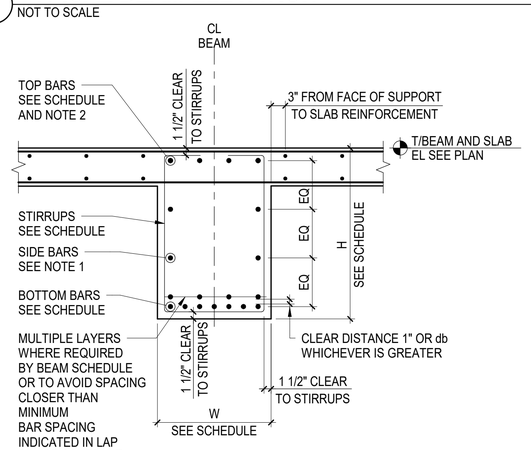

NOTES:

1. IF H IS GREATER THAN 36" PROVIDE SIDE BARS #5@10" MINIMUM UNLESS OTHERWISE NOTED IN SCHEDULE
2. WHERE TWO LAYERS OF BARS ARE REQUIRED, TOP OR BOTTOM, PLACE SHORT BARS AS INNER LAYER

2 TYPICAL BEAM SECTION

NOT TO SCALE

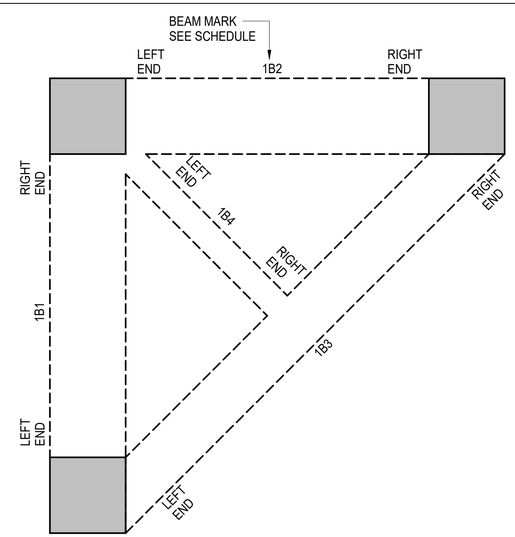

3 BEAM ORIENTATION KEY PLAN

NOT TO SCALE

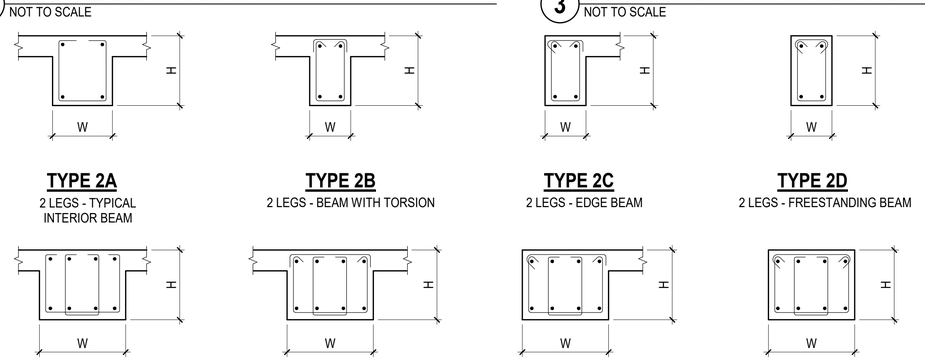

4 BEAM STIRRUP TYPES

NOT TO SCALE

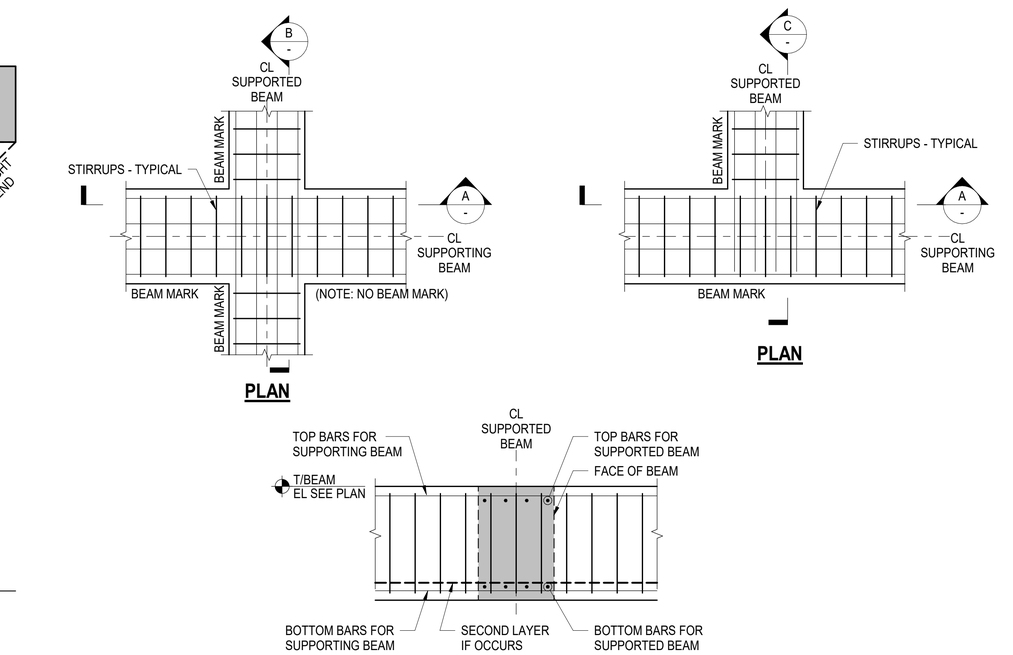

A ELEVATION OF SUPPORTING BEAM

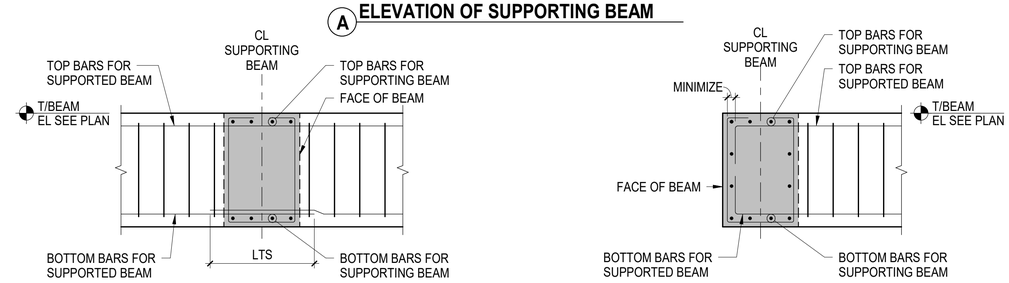

B ELEVATION OF SUPPORTED BEAM

C ELEVATION OF SUPPORTED BEAM

5 TYPICAL DETAILS AT BEAM JOINT SUPPORT

NOT TO SCALE

Client:

RANGER PROPERTIES
4790 BROADWAY
NEW YORK, NY 10034

Architect / Engineer:

FOGARTY FINGER architecture | interiors
69 Walker St, New York, NY 10013
t 212 966 7450 f 212 966 7444

Library Architect:

Andrew Berman Architect, PLLC
77 Chambers Street, 4th Floor
New York, NY 10007
Tel 212.226.5998

Structural:

Thornton Tomasetti
51 Madison Avenue
New York, NY 10010
Tel 917.661.7800

MEP / FP:

Concessi Engineering, PC
499 7th Avenue, 11th Floor South Tower
New York, NY 10018
Tel 212.629.6810

FACADE:

SIMPSON GUMPERTZ & HEGER
550 7th Avenue, 10th Floor
New York, NY 10018
Tel 212.271.7000

CODE:

METROPOLIS
22 Courtland Street, 10th Floor
New York, NY 10007
Tel 212.233.6344

No.	Date	Issue
2	DD ESTIMATING	02.06.2019
1	SCHEMATIC DESIGN	11.20.2018

Project:

4790 BROADWAY
NEW YORK, NY 10034

Drawing Title:

TYPICAL CONCRETE BEAM DETAILS-I

Seal & Signature:

DATE (MM-DD-YY): 02/06/19
PROJECT No.: N18168.00
DRAWING BY: AP
CHK BY: SB
DWG. No.: S-405.00
CADD FILE No.:

C:\Sites\N18168.00_4790 BROADWAY_R19_CD\acad.rvt

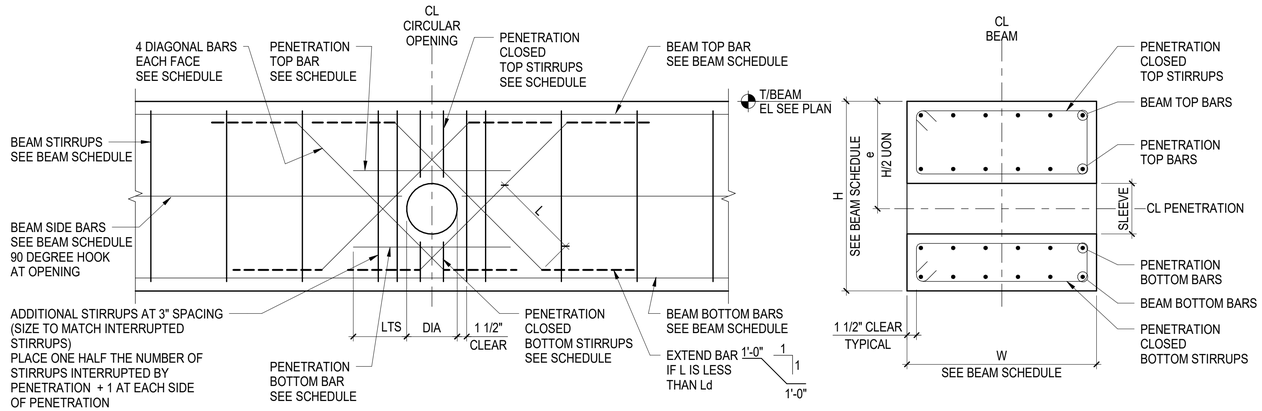

NOTES:

1. ALL BEAM PENETRATIONS SHALL BE SHOWN ON THE SHOP DRAWINGS FOR REVIEW BY THE ARCHITECT/ENGINEER. NO PENETRATIONS SHALL BE MADE WITHOUT PRIOR REVIEW BY THE ARCHITECT AND WRITTEN APPROVAL FROM THE SER
2. THESE DETAILS SHALL BE USED IN CONJUNCTION WITH CONCRETE BEAM PENETRATION SCHEDULE
3. THE MINIMUM CLEAR SPACE BETWEEN TWO ADJACENT PENETRATIONS SHALL BE GREATER OF THE LARGEST PENETRATION DIMENSION OR TWO TIMES THE BEAM DEPTH
4. THE MINIMUM CLEAR DIMENSION BETWEEN THE EDGE OF A PENETRATION AND THE FACE OF SUPPORT , FACE OF SUPPORTED BEAM, OR POINT LOAD IMPOSED, SHALL BE THE BEAM DEPTH
5. SEE STRUCTURAL DRAWINGS FOR PENETRATIONS. GENERAL CONTRACTOR SHALL VERIFY QUANTITY, SIZE, AND LOCATION OF ALL PENETRATIONS WITH MEP DRAWINGS. NOTIFY SER IN WRITING OF ANY DISCREPANCIES FOR REVIEW AND APPROVAL
6. THE ADDITIONAL REINFORCEMENT SHOWN HERE IS NOT REQUIRED FOR OPENINGS 4" IN DIAMETER OR SMALLER PROVIDED NO BEAM REINFORCEMENT IS INTERRUPTED AND MINIMUM CONCRETE COVER IS PROVIDED AROUND ALL BARS. IT IS ACCEPTABLE TO ADJUST BEAM REINFORCEMENT WITHIN MAXIMUM SPACING LIMITS FOR STIRRUPS OR SIDE BARS

1 TYPICAL CONCRETE BEAM WITH CIRCULAR PENETRATION

NOT TO SCALE

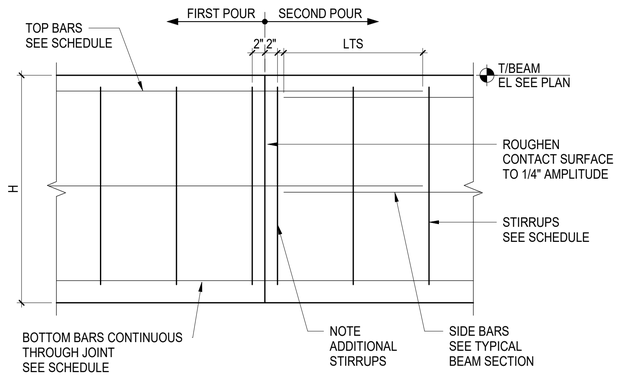

NOTES:

1. CONTRACTOR SHALL SUBMIT CONCRETE CONSTRUCTION JOINT LAYOUT FOR REVIEW AND APPROVAL (REFER TO GENERAL NOTES AND SPECIFICATIONS) PRIOR TO REINFORCEMENT SUBMITTAL.
2. HORIZONTAL CONSTRUCTION JOINTS ARE NOT PERMITTED WITHOUT WRITTEN APPROVAL FROM SER.

3 TYPICAL BEAM CONSTRUCTION JOINT - ELEVATION

NOT TO SCALE

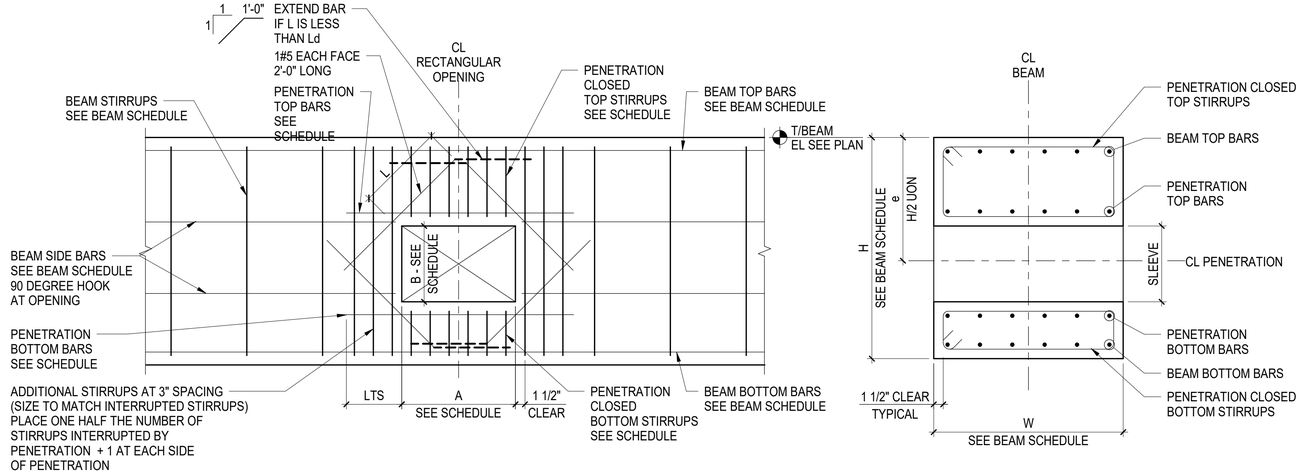

NOTES:

1. ALL BEAM PENETRATIONS SHALL BE SHOWN ON THE SHOP DRAWINGS FOR REVIEW BY THE ARCHITECT/ENGINEER. NO PENETRATIONS SHALL BE MADE WITHOUT PRIOR REVIEW BY THE ARCHITECT AND WRITTEN APPROVAL FROM THE SER
2. THESE DETAILS SHALL BE USED IN CONJUNCTION WITH CONCRETE BEAM PENETRATION SCHEDULE
3. THE MINIMUM CLEAR SPACE BETWEEN TWO ADJACENT PENETRATIONS SHALL BE GREATER OF THE LARGEST PENETRATION DIMENSION OR TWO TIMES THE BEAM DEPTH
4. THE MINIMUM CLEAR DIMENSION BETWEEN THE EDGE OF A PENETRATION AND THE FACE OF SUPPORT , FACE OF SUPPORTED BEAM, OR POINT LOAD IMPOSED, SHALL BE THE BEAM DEPTH
5. SEE STRUCTURAL DRAWINGS FOR PENETRATIONS. GENERAL CONTRACTOR SHALL VERIFY QUANTITY, SIZE, AND LOCATION OF ALL PENETRATIONS WITH MEP DRAWINGS. NOTIFY SER IN WRITING OF ANY DISCREPANCIES FOR REVIEW AND APPROVAL
6. THE ADDITIONAL REINFORCEMENT SHOWN HERE IS NOT REQUIRED FOR OPENINGS 4"x4" OR SMALLER PROVIDED NO BEAM REINFORCEMENT IS INTERRUPTED AND MINIMUM CONCRETE COVER IS PROVIDED AROUND ALL BARS. IT IS ACCEPTABLE TO ADJUST BEAM REINFORCEMENT WITHIN MAXIMUM SPACING LIMITS FOR STIRRUPS OR SIDE BARS

2 TYPICAL CONCRETE BEAM WITH RECTANGULAR PENETRATION

NOT TO SCALE

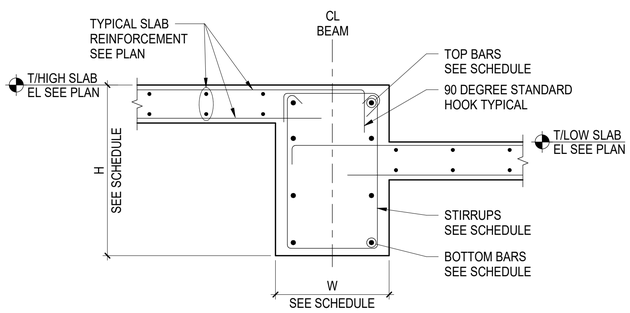

NOTE:

1. SEE TYPICAL BEAM SECTION FOR INFORMATION NOT SHOWN

4 TYPICAL SLAB / BEAM DETAIL AT CHANGE OF SLAB ELEVATION

NOT TO SCALE

Client:

RANGER PROPERTIES
4790 BROADWAY
NEW YORK, NY 10034

Architect / Engineer:

FOGARTY FINGER
architecture | interiors
69 Walker St, New York, NY 10013
t 212 966 7450 f 212 966 7444

Library Architect:

Andrew Berman Architect, PLLC
77 Chambers Street, 4th Floor
New York, NY 10007
Tel 212.226.5998

Structural:

Thornton Tomasetti
51 Madison Avenue
New York, NY 10010
Tel 917.661.7800

MEP / FP:

Concessi Engineering, PC
499 7th Avenue, 11th Floor South Tower
New York, NY 10018
Tel 212.629.6810

FACADE:

SIMPSON GUMPERTZ & HEGER
550 7th Avenue, 10th Floor
New York, NY 10018
Tel 212.271.7000

CODE:

METROPOLIS
22 Courtland Street, 10th Floor
New York, NY 10007
Tel 212.233.6344

No.	Date	Issue
2	DD ESTIMATING	02.06.2019
1	SCHEMATIC DESIGN	11.20.2018

Project:

4790 BROADWAY
NEW YORK, NY 10034

Drawing Title:

TYPICAL CONCRETE BEAM DETAILS-II

Seal & Signature:

DATE (MM-DD-YY): 02/06/19
PROJECT No.: N18168.00
DRAWING BY: AP
CHK BY: SB
DWG. No.: S-406.00
CADD FILE No.:

C:\Scratch\N18168.00_4790 BROADWAY_R19_DWard.rvt

NOTES:

1. REFER TO PLANS FOR ADDITIONAL BARS AROUND OPENINGS
2. SEE STRUCTURAL DRAWINGS FOR QUANTITY AND LOCATIONS OF OPENINGS. CONTRACTOR SHALL VERIFY SIZE AND LOCATION OF ALL OPENINGS WITH MEP DRAWINGS NOTIFY STRUCTURAL ENGINEER IN WRITING OF ANY DISCREPANCIES FOR REVIEW AND APPROVAL
3. FOR TWO-WAY SLAB SEE TYPICAL TWO-WAY SLAB OPENING LIMITATIONS. FOR OPENING NOT MEETING LIMITATIONS OR GREATER THAN 3 FEET, SUBMIT OPENINGS TO SER FOR APPROVAL
4. FOR ONE-WAY SLABS WHERE THE OPENING DIMENSION PERPENDICULAR TO THE DIRECTION OF THE SPAN IS GREATER THAN 2 FEET, SUBMIT OPENINGS TO SER FOR APPROVAL
5. WHERE ADJACENT OPENINGS ARE NOT SEPARATED BY 2X THE LARGEST OPENING DIMENSION OR WOULD INTERRUPT THE ADDITIONAL REINFORCEMENT FROM THE ADJACENT OPENING, SUBMIT OPENINGS TO SER FOR APPROVAL

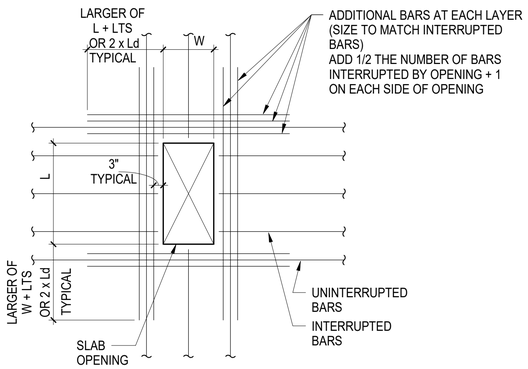

ADDITIONAL BARS WHERE BARS ARE INTERRUPTED

NOTES: ADDITIONAL BARS

1. PROVIDE ADDITIONAL BARS ON EACH SIDE OF OPENING FOR TOP AND BOTTOM BARS THAT ARE INTERRUPTED BY OPENINGS DISTRIBUTE REPLACEMENT BARS EQUALLY TO BOTH SIDES OF OPENING AT 3" SPACING
2. PROVIDE A MINIMUM OF 2 BARS EACH SIDE OF OPENING TOP AND BOTTOM WHERE NO TOP BARS ARE PRESENT, PROVIDE ADDITIONAL TOP BARS SHOWN ABOVE
3. AT CLUSTERED OPENINGS, PROVIDE THESE ADDITIONAL BARS AROUND THE CLUSTER PLUS THE ADDITIONAL BARS SHOWN IN THE CLUSTERED OPENING DETAIL

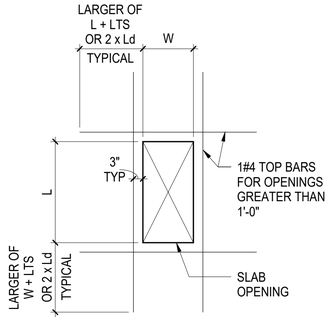

ADDITIONAL TOP BARS WHERE NO TOP BARS ARE PRESENT

ADDITIONAL TOP BARS	
OPENING SIZE (LARGER DIMENSION OF OPENING)	TOP BARS ALL SIDES
0 - 12"	NONE
12" - 36"	(1) #4

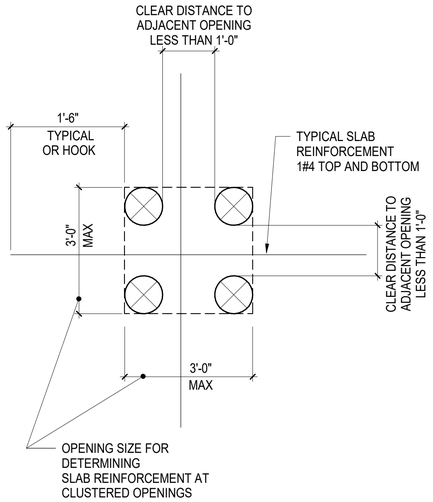

TYPE 1

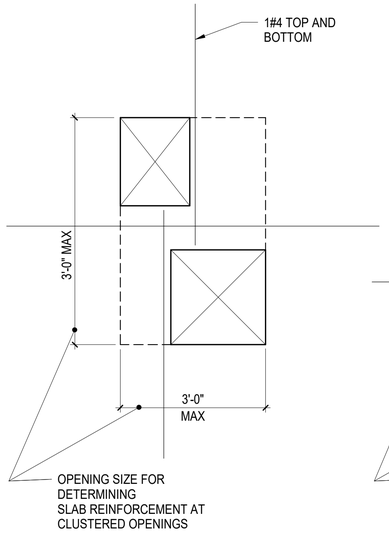

TYPE 2

SEE TYPE 1 FOR INFORMATION NOT SHOWN

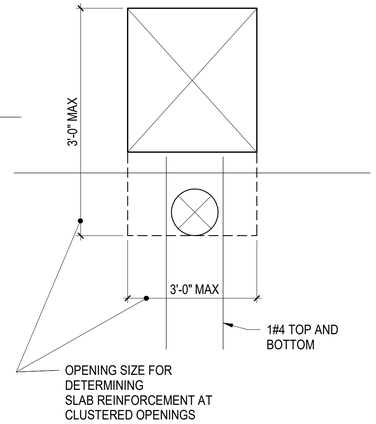

TYPE 3

SEE TYPE 1 FOR INFORMATION NOT SHOWN

CLUSTERED OPENING ADDITIONAL REINFORCEMENT

NOTES: CLUSTERED OPENINGS

1. THE REINFORCEMENT REQUIREMENTS AT CLUSTERED OPENINGS ARE IN ADDITION TO THE TYPICAL SLAB OPENING DETAIL REQUIREMENTS AROUND THE ENTIRE CLUSTER
2. FOR ONE-WAY SLABS, WHEN CLUSTERED OPENING IS GREATER THAN 2 FEET, SUBMIT TO SER FOR APPROVAL.
3. FOR TWO-WAY SLABS, WHEN CLUSTERED OPENING DOES NOT MEET TWO-WAY SLAB OPENING LIMITATIONS OR IS GREATER THAN 3 FEET, SUBMIT TO SER FOR APPROVAL

1 TYPICAL SLAB OPENING DETAILS

NOT TO SCALE

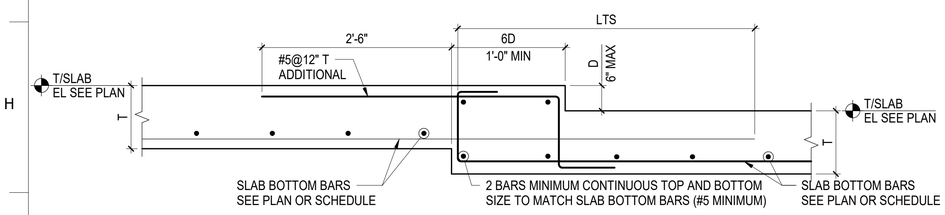

D LESS THAN T MINUS 2 INCHES
BOTTOM BARS INTERRUPTED BY STEP

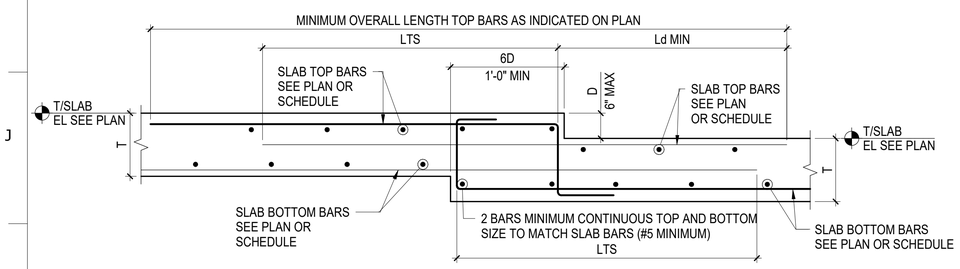

D LESS THAN T MINUS 2 INCHES
TOP AND BOTTOM BARS INTERRUPTED BY STEP

2 TYPICAL STEP IN SLAB DETAILS

NOT TO SCALE

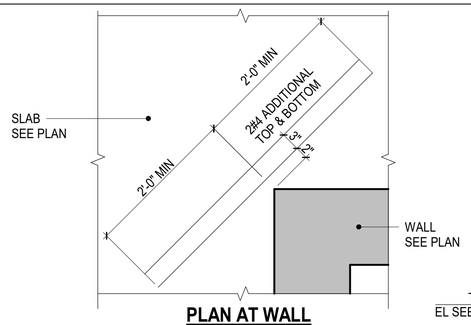

PLAN AT WALL

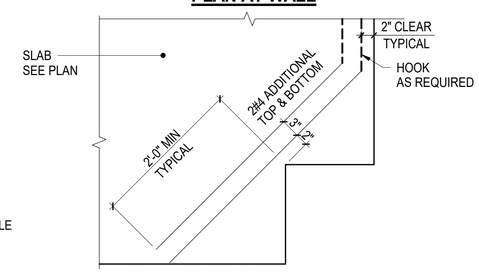

PLAN AT RE-ENTRANT CORNER

3 TYPICAL CORNER SLAB DETAILS

NOT TO SCALE

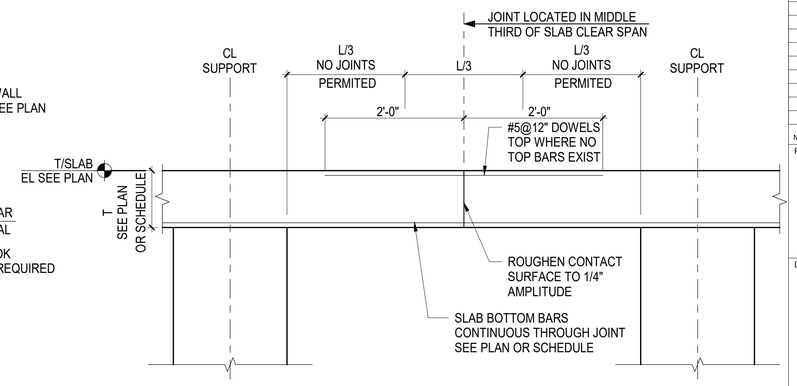

NOTES:

1. CONTRACTOR SHALL SUBMIT CONSTRUCTION JOINT LAYOUT PLAN FOR SER APPROVAL
2. FOR SLAB REINFORCEMENT NOT SHOWN, SEE PLAN OR SCHEDULE

4 TYPICAL SLAB CONSTRUCTION JOINT

NOT TO SCALE

Client:

RANGER PROPERTIES
4790 BROADWAY
NEW YORK, NY 10034

Architect / Engineer:

FOGARTY FINGER architecture | interiors
69 Walker St, New York, NY 10013
t 212 966 7450 f 212 966 7444

Library Architect:

Andrew Berman Architect, PLLC
77 Chambers Street, 4th Floor
New York, NY 10007
Tel 212.226.5998

Structural:

Thornton Tomasetti
51 Madison Avenue
New York, NY 10010
Tel 917.661.7800

MEP / FP:

Concessi Engineering, PC
499 7th Avenue, 11th Floor South Tower
New York, NY 10018
Tel 212.629.6810

FACADE:

SIMPSON GUMPERTZ & HEGER
550 7th Avenue, 10th Floor
New York, NY 10018
Tel 212.271.7000

CODE:

METROPOLIS
22 Courtland Street, 10th Floor
New York, NY 10007
Tel 212.233.6344

No.	Date	Issue
2	DD ESTIMATING	02.06.2019
1	SCHEMATIC DESIGN	11.20.2018

Project:

4790 BROADWAY
NEW YORK, NY 10034

Drawing Title:

TYPICAL CONCRETE SLAB DETAILS

Seal & Signature:

DATE (MM-DD-YY): 02/06/19
PROJECT No.: N18168.00
DRAWING BY: AP
CHK BY: SB
DWG. No.: S-407.00
CADD FILE No.:

C:\Scratch\N18168.00_4790 BROADWAY_R19_CWard.rvt

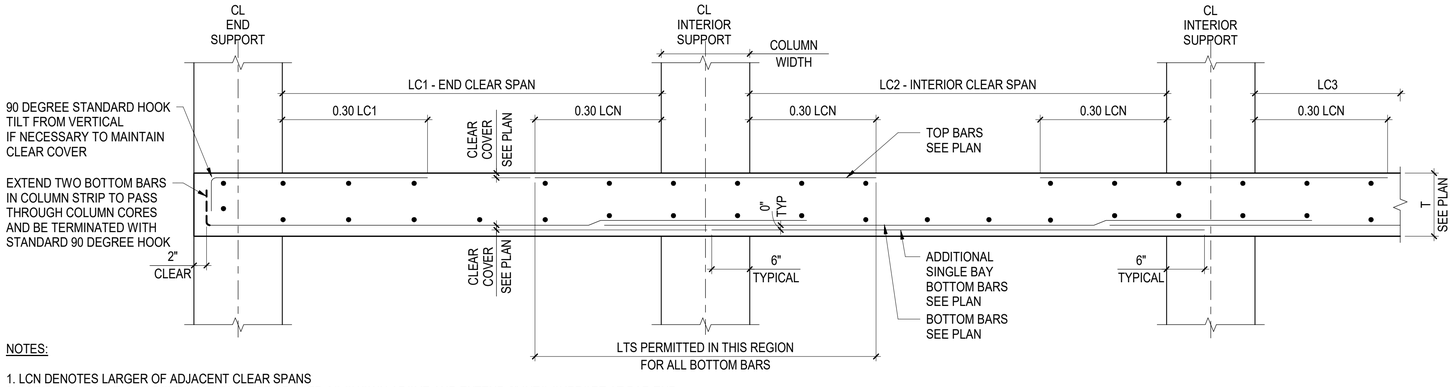

NOTES:

1. LCN DENOTES LARGER OF ADJACENT CLEAR SPANS
2. ADDITIONAL MULTI-BAY BOTTOM BARS TO BE SPLICED AS SHOWN ABOVE AND EXTEND 6" INTO SUPPORT AT BAR END

1A TYPICAL TWO-WAY FLAT PLATE - COLUMN STRIP

NOT TO SCALE

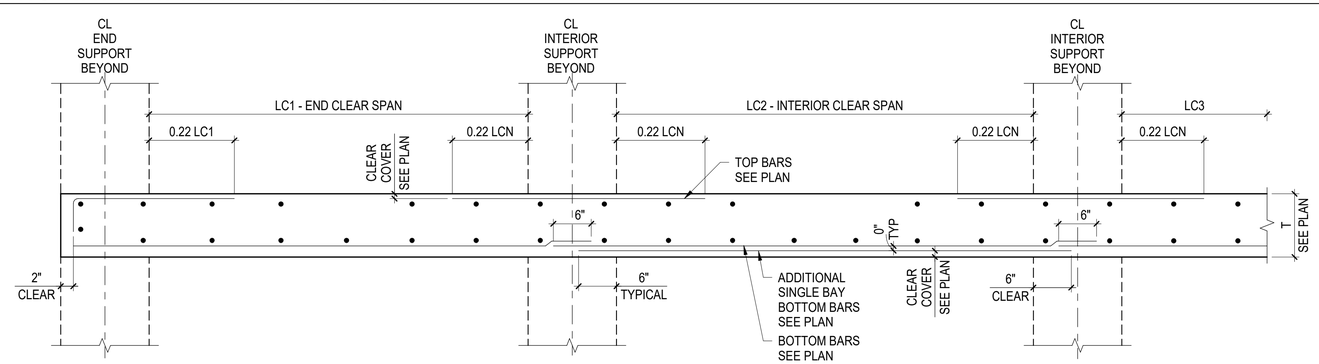

NOTES:

1. LCN DENOTES LARGER OF ADJACENT CLEAR SPANS
2. ADDITIONAL MULTI-BAY BOTTOM BARS TO BE SPLICED AS SHOWN ABOVE AND EXTEND 6" INTO SUPPORT AT BAR END

1B TYPICAL TWO-WAY FLAT PLATE - MIDDLE STRIP

NOT TO SCALE

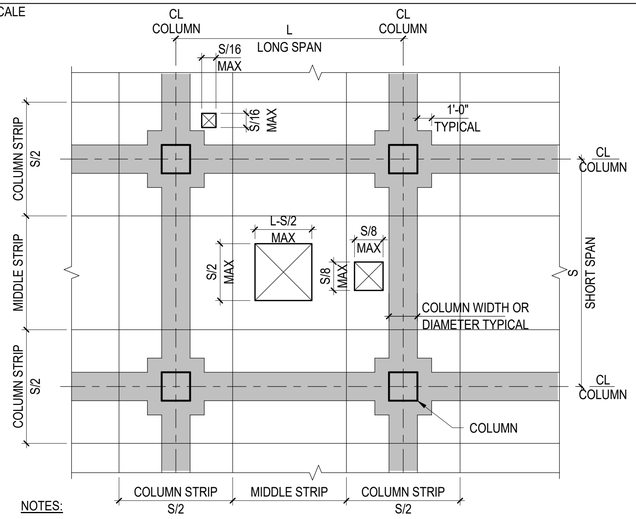

NOTES:

1. INDICATES ZONE WHERE OPENINGS ARE NOT PERMITTED WITHOUT WRITTEN APPROVAL BY SER
   OPENINGS NOT SHOWN ON STRUCTURAL DRAWINGS MUST BE COORDINATED AND APPROVED BY SER
2. OPENINGS MEETING THE LIMITATIONS ABOVE SHALL BE PROVIDED WITH REINFORCEMENT AS SHOWN ON PLAN AND FOLLOWING TYPICAL SLAB OPENING DETAILS INCLUDING ADDITIONAL BARS FOR INTERRUPTED REINFORCEMENT
3. OPENINGS SHALL BE SHOWN ON COORDINATED PENETRATION DRAWINGS AND REINFORCEMENT SHOP DRAWINGS FOR SER REVIEW
4. OPENINGS NOT MEETING THESE LIMITATIONS MUST BE SUBMITTED TO THE SER FOR COORDINATION, DESIGN, AND APPROVAL PRIOR TO SUBMITTING SHOP DRAWINGS

3 TYPICAL TWO-WAY SLAB OPENING LIMITATIONS

3/4" = 1'-0"

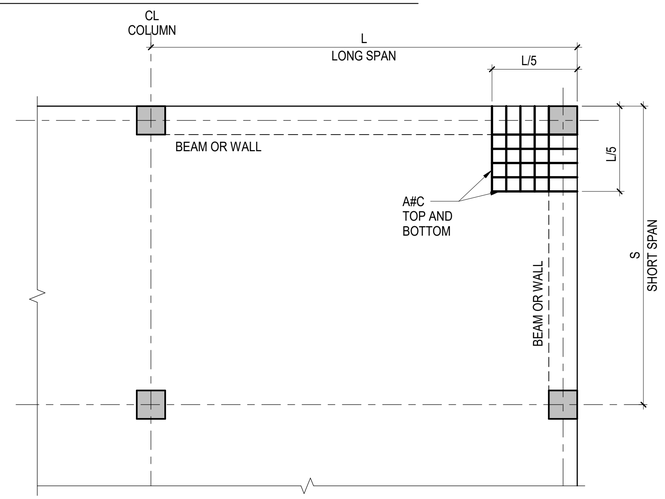

NOTES:

1. SEE PLAN FOR SLAB REINFORCEMENT
   BARS SHOWN ABOVE ARE ADDITIONAL TO THOSE SHOWN ON PLAN
   BARS SHALL BE LOCATED IN SAME LAYERS AS SLAB REINFORCEMENT
   BEAM TOP BARS TO BE LOCATED BELOW SLAB TOP BARS
2. ADDITIONAL BARS TO BE EQUALLY SPACED WITHIN EXTENT SHOWN ABOVE
3. ADDITIONAL TOP BARS TO BE HOOKED INTO SUPPORT
   ADDITIONAL BOTTOM BARS TO EXTEND 6" INTO SUPPORT

4 TYPICAL BEAM OR WALL SUPPORTED SLAB EXTERIOR CORNER DETAIL

3/16" = 1'-0"

Client:

RANGER PROPERTIES
4790 BROADWAY
NEW YORK, NY 10034

Architect / Engineer:

FOGARTY FINGER architecture | interiors
69 Walker St, New York, NY 10013
t 212 966 7450 f 212 966 7444

Library Architect:

Andrew Berman Architect, PLLC
77 Chambers Street, 4th Floor
New York, NY 10007
Tel 212.226.5998

Structural:

Thornton Tomasetti
51 Madison Avenue
New York, NY 10010
Tel 917.661.7800

MEP / FP:

Concessi Engineering, PC
499 7th Avenue, 11th Floor South Tower
New York, NY 10018
Tel 212.629.6810

FACADE:

SIMPSON GUMPERTZ & HEGER
550 7th Avenue, 10th Floor
New York, NY 10018
Tel 212.271.7000

CODE:

METROPOLIS
22 Courtland Street, 10th Floor
New York, NY 10007
Tel 212.233.6344

No.	Date	Issue
2	DD ESTIMATING	02.06.2019
1	SCHEMATIC DESIGN	11.20.2018

Project:

4790 BROADWAY
NEW YORK, NY 10034

Drawing Title:

TYPICAL CONCRETE TWO-WAY SLAB DETAILS

Seal & Signature:

DATE (MM-DD-YY): 02/06/19
PROJECT No.: N18168.00
DRAWING BY: AP
CHK BY: SB
DWG. No.: S-408.00
CADD FILE No.:

C:\Sprata\N18168.00_4790 BROADWAY_R19_CV.revit.rvt

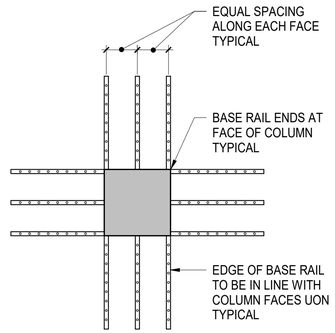

TYPE A - INTERIOR COLUMN
(12 RAILS)

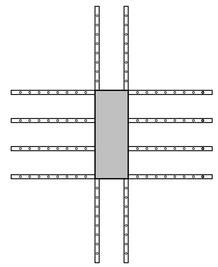

TYPE B - INTERIOR COLUMN
(12 RAILS)

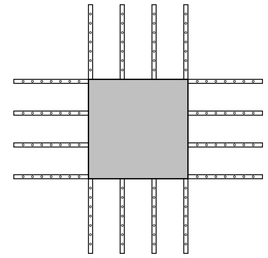

TYPE C - INTERIOR COLUMN
(16 RAILS)

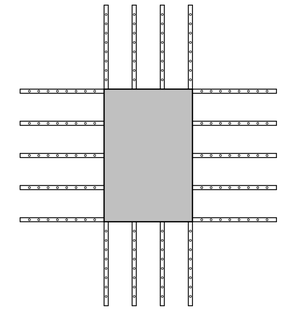

TYPE D - INTERIOR COLUMN
(18 RAILS)

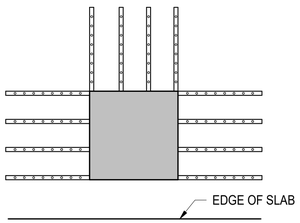

TYPE E - EDGE COLUMN
(12 RAILS)

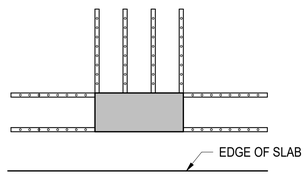

TYPE F - EDGE COLUMN
(8 RAILS)

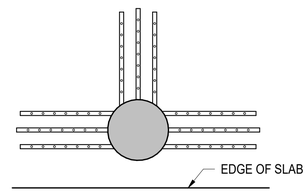

TYPE G - EDGE COLUMN
(9 RAILS)

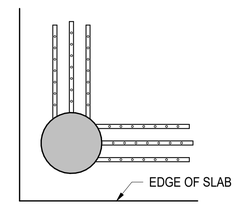

TYPE H - CORNER COLUMN
(6 RAILS)

1 HEADED SHEAR STUD REINFORCEMENT TYPE - PLAN ARRANGEMENT

NOT TO SCALE

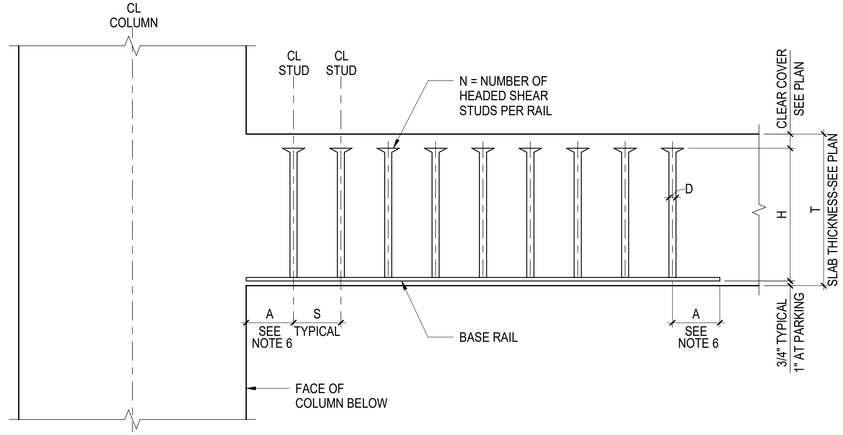

HEADED SHEAR STUD REINFORCEMENT ELEVATION

STUDRAIL SCHEDULE						
STUDRAIL MARK	TYPE SEE NOTE 7	A	H	D	N	S
SR-X	-	-	-	-	-	-
SR-X						
SR-X						
SR-X						

NOTES:

1. HEADED SHEAR STUD REINFORCEMENT BY DECON OR APPROVED EQUAL
2. SEE PLANS FOR HEADED SHEAR STUD REINFORCEMENT LOCATIONS
3. HEADED STUDS AND RAIL ASSEMBLY SHALL CONFORM TO ASTM 1044 WITH STUD Fy=50 KSI MINIMUM
4. ALL DIMENSIONS ARE IN INCHES
5. BASE RAILS TO BE PLACED PERPENDICULAR TO COLUMN FACES
6. DIMENSION A TO BE LESSER OF 3" OR H/2
7. TYPE REFERS TO HEADED SHEAR STUD REINFORCEMENT TYPE - PLAN ARRANGEMENT

2 HEADED SHEAR STUD REINFORCEMENT ELEVATION AND SCHEDULE

NOT TO SCALE

C:\Scratch\N18168.00_4790 BROADWAY_R19_CWard.rvt

Client:

RANGER PROPERTIES
4790 BROADWAY
NEW YORK, NY 10034

Architect / Engineer:

FOGARTY FINGER
architecture | interiors
69 Walker St, New York, NY 10013
t 212 966 7450 f 212 966 7444

Library Architect:

Andrew Berman Architect, PLLC
77 Chambers Street, 4th Floor
New York, NY 10007
Tel 212.226.5998

Structural:

Thornton Tomasetti
51 Madison Avenue
New York, NY 10010
Tel 917.661.7800

MEP / FP:

Concessi Engineering, PC
499 7th Avenue, 11th Floor South Tower
New York, NY 10018
Tel 212.629.6810

FACADE:

SIMPSON GUMPERTZ & HEGER
550 7th Avenue, 10th Floor
New York, NY 10018
Tel 212.271.7000

CODE:

METROPOLIS
22 Courtland Street, 10th Floor
New York, NY 10007
Tel 212.233.6344

No.	Date	Issue
2	DD ESTIMATING	02.06.2019
1	SCHEMATIC DESIGN	11.20.2018

Project:

4790 BROADWAY
NEW YORK, NY 10034

Drawing Title:

TYPICAL CONCRETE
TWO-WAY SLAB DETAILS

Seal & Signature:

DATE (MM-DD-YY): 02/06/19
PROJECT No.: N18168.00
DRAWING BY: AP
CHK BY: SB
DWG. No.: **S-409.00**
CADD FILE No.:

WALL THICKNESS t	MAXIMUM WALL HEIGHT H	VERTICAL REINFORCEMENT (SEE NOTE 1)	
		5 PSF	30 PSF
6"	12'-0"	#4@48"	#4@32"
	14'-0"	#4@48"	#5@32"
8"	12'-0"	#4@48"	#4@48"
	14'-6"	#4@48"	#4@32"
	17'-0"	#4@48"	#5@32"
	19'-0"	#4@48"	#6@32"
12"	14'-0"	#4@48"	#4@48"
	18'-0"	#4@48"	#4@32"
	22'-6"	#4@48"	#5@32"
	26'-0"	#4@48"	#6@32"
	29'-0"	#4@48"	2#6@40"

VERTICAL REINFORCEMENT SCHEDULE

NOTES:

1. PROVIDE THE GREATER QUANTITY OF TYPICAL MINIMUM VERTICAL REINFORCEMENT AS SHOWN IN THE VERTICAL REINFORCEMENT SCHEDULE OR THE SEISMIC SCHEDULE AS FOLLOWS FOR THE FOLLOWING WALL TYPE AND DESIGN PRESSURE, UON
   - TYPICAL INTERIOR WALLS 5 PSF
   - INTERIOR ELEVATOR SHAFT WALLS 10 PSF
   - EXTERIOR WALLS 30 PSF
   - SEISMIC
     SEE MINIMUM SEISMIC REINFORCEMENT SCHEDULE
2. PROVIDE THE FOLLOWING TYPICAL MINIMUM HORIZONTAL REINFORCEMENT:
   - INTERIOR WALLS: 2 - 9 GAGE WIRES AT EVERY OTHER COURSE
   - EXTERIOR WALLS: 2 - 3/16" DIA WIRES AT EVERY OTHER COURSE
   - SEISMIC DESIGN CATEGORY D, E, AND F PROVIDE HORIZONTAL REINFORCEMENT USING BOND BEAMS AS FOLLOWS:
     - 1# 4 @ 48" OC FOR 6" THICK WALL
     - 2# 4 @ 48" OC FOR WALLS > 6" THICK
3. FOR LOCATION AND THICKNESS OF MASONRY WALLS SEE ARCHITECTURAL DRAWINGS
4. VERTICAL REINFORCEMENT SCHEDULE IS BASED ON DESIGN SERVICE LOAD PRESSURE AS NOTED
5. 'H' INDICATES HEIGHT OF WALL BETWEEN LATERAL SUPPORT POINTS
6. DESIGN OF MASONRY WALL IS BASED ON PARTIALLY GROUTED WALLS WITH REINFORCEMENT AS SCHEDULED
7. DESIGN IS BASED ON A MINIMUM COMPRESSIVE STRENGTH f'm = 1500 PSI MINIMUM
8. VERTICAL REINFORCEMENT SHALL BE SECURED WITH WIRE POSITIONERS ETC., AT INTERVALS NOT TO EXCEED 48," AND BE LOCATED AT THE CENTER OF THE WALL UON
9. SEE ELEVATIONS AND DETAILS FOR ADDITIONAL REINFORCEMENT AT OPENINGS AND JOINTS

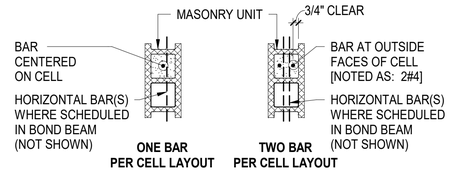

TYPICAL REINFORCEMENT LAYOUT

1 TYPICAL CMU NON-BEARING WALL REINFORCEMENT SCHEDULE

NOT TO SCALE

MAXIMUM MASONRY OPENING 'L'	WALL THICKNESS		
	6" WALL	8" WALL	12" WALL
	LINTEL	LINTEL	LINTEL
4'-0"	(2)L2.5x2.5x1/4	(2)L3.5X3X1/4 LLV	(2)L5X5X5/16
5'-0"	(2)L3X2.5X1/4 LLV	(2)L3.5X3X1/4 LLV	(2)L5X5X5/16
6'-0"	(2)L3X2.5X1/4 LLV	(2)L3.5X3X1/4 LLV	(2)L5X5X5/16
7'-0"	(2)L3.5X2.5X5/16 LLV	(2)L5X3X1/4 LLV	(2)L5X5X5/16
8'-0"	(2)L3.5X2.5X3/8 LLV	(2)L5X3X5/16 LLV	(2)L5X5X5/16
10'-0"	W8X10	(2)L5X3X3/8 LLV	W8X24 + 1/4"x10" PLATE
12'-0"	W8X10	(2)L6X3.5X3/8 LLV	W8X24 + 1/4"x10" PLATE

NOTES:

1. LINTEL ANGLES AND W-SHAPE LINTELS SHALL BE ASTM A36 STEEL MINIMUM
2. NO MORE THAN SIX COURSES OF CMU MAY BE PLACED, REINFORCED, GROUTED AND CURED AT ONE TIME ABOVE LINTEL BEFORE PROCEEDING FURTHER
3. PROVIDE MINIMUM 8" BEARING EACH END
4. 2L LINTELS SHALL BE WELDED OR BOLTED TOGETHER AT INTERVALS NOT EXCEEDING 2'-0" OC, WITH A MINIMUM OF TWO CONNECTIONS BETWEEN ENDS
5. AT EXTERIOR WALL SYSTEMS AND AT HUMID LOCATIONS LINTELS SHALL BE GALVANIZED, REFER TO SPECIFICATIONS FOR FURTHER INFORMATION
6. SEE ARCHITECTURAL DRAWINGS FOR FIREPROOFING REQUIREMENTS
7. SEE TYPICAL CMU NON-BEARING WALL ELEVATION WITH STEEL OR PRECAST LINTELS FOR DETAILS OF REINFORCEMENT AROUND OPENINGS

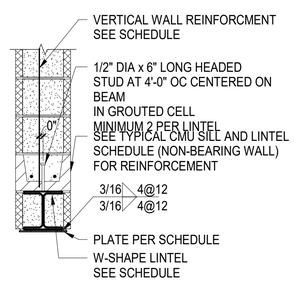

STEEL LINTEL WITH PLATE

2 TYPICAL STEEL LINTEL SCHEDULE (NON-BEARING WALL)

NOT TO SCALE

CMU LAP SPLICE AND TENSION EMBEDMENT LENGTH (f'm = 1500 psi & fy = 60 ksi)			
SCHEDULED REINFORCEMENT CONDITION	BAR SIZE		
	#4	#5	#6
ONE BAR IN CELL OR COURSE (NOTE 1)	24"	26"	40"
TWO BARS IN CELL OR COURSE	36"	45"	54"

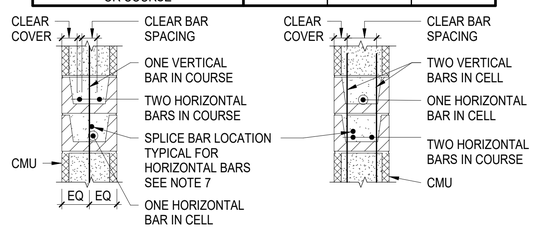

REINFORCEMENT CONDITIONS

NOTES:

1. FOR 6" AND 8" WALLS WITH ONE HORIZONTAL BAR IN COURSE, USE SPLICE LENGTHS FOR TWO BARS IN CELL OR COURSE
2. WHERE EPOXY-COATED REINFORCEMENT IS USED, INCREASE LAP SPLICE LENGTH BY 50%
3. SPLICES OF HORIZONTAL REINFORCEMENT IN WALLS CONTAINING TWO BARS PER COURSE SHALL BE STAGGERED
4. TYPE 1 OR TYPE 2 MECHANICAL SPLICES MAY BE SUBSTITUTED UON, PROVIDED THEY DEVELOP 125% OF THE YIELD STRENGTH OF THE BAR AND ARE APPROVED BY THE EOR
5. WHERE BARS OF DIFFERENT SIZES ARE TO BE SPLICED, THE SPLICE LENGTH SHALL BE THAT REQUIRED FOR THE LARGEST
6. SEE TYPICAL REINFORCEMENT LAYOUT DETAIL FOR MINIMUM CLEAR COVER TO INSIDE OF FACESHELL
7. SPLICES OF HORIZONTAL REINFORCEMENT SHOULD BE PLACED VERTICALLY OVER MAIN BAR

3 CMU LAP SPLICE AND TENSION EMBEDMENT LENGTH SCHEDULE

NOT TO SCALE

Client:

RANGER PROPERTIES
4790 BROADWAY
NEW YORK, NY 10034

Architect / Engineer:

FOGARTY FINGER architecture | interiors
69 Walker St, New York, NY 10013
t 212 966 7450 f 212 966 7444

Library Architect:

Andrew Berman Architect, PLLC
77 Chambers Street, 4th Floor
New York, NY 10007
Tel 212.226.5998

Structural:

Thornton Tomasetti
51 Madison Avenue
New York, NY 10010
Tel 917.661.7800

MEP / FP:

Concessi Engineering, PC
499 7th Avenue, 11th Floor South Tower
New York, NY 10018
Tel 212.629.6810

FACADE:

SIMPSON GUMPERTZ & HEGER
550 7th Avenue, 10th Floor
New York, NY 10018
Tel 212.271.7000

CODE:

METROPOLIS
22 Courtland Street, 10th Floor
New York, NY 10007
Tel 212.233.6344

No.	Date	Issue
2	DD ESTIMATING	02.06.2019
1	SCHEMATIC DESIGN	11.20.2018

Project:

4790 BROADWAY
NEW YORK, NY 10034

Drawing Title:

TYPICAL MASONRY NON-BEARING WALL SCHEDULES I

Seal & Signature:

DATE (MM-DD-YY): 02/06/19
PROJECT No.: N18168.00
DRAWING BY: SB
CHK BY: CW
DWG. No.: S-700.00
CADD FILE No.:

C:\Scratch\N18168.00_4790 BROADWAY_R19_CWard.rvt

	DESIGN PRESSURE	MAXIMUM MASONRY OPENING 'L'	WALL THICKNESS								
			6" WALL (NOTE 5)			8" WALL			12" WALL		
			LINTEL OR SILL DEPTH	1ST COURSE REINF	2ND COURSE REINF	LINTEL OR SILL DEPTH	1ST COURSE REINF	2ND COURSE REINF	LINTEL OR SILL DEPTH	1ST COURSE REINF	2ND COURSE REINF
LINTEL SCHEDULE	5 PSF	4'-0"	8	2-#4	-	8	2-#5	-	16	2-#4	-
		7'-0"	16	2-#4	-	16	2-#4	-	16	2-#6	-
		12'-0"	24	2-#5	2-#4	24	2-#6	2-#4	32	2-#6	2-#4
	30 PSF	4'-0"	8	2-#4	-	8	2-#5	-	16	2-#4	-
		7'-0"	16	2-#5	2-#4	16	2-#6	-	24	2-#6	-
		12'-0"	40	2-#6	2-#6	40	2-#6	2-#6	48	2-#6	2-#6
SILL SCHEDULE	5 PSF	12'-0"	8	2-#4	-	8	2-#4	-	8	2-#4	-
	30 PSF	7'-0"	8	2-#5	-	8	2-#5	-	8	2-#5	-
		12'-0"	24	2-#5	2-#5 (NOTE 5)	16	2-#6	2-#6	16	2-#5	2-#5

NOTES:

1. SEE NOTE 1 OF TYPICAL CMU NON-BEARING WALL REINFORCEMENT SCHEDULE FOR DESIGN PRESSURE TO BE USED. FOR SEISMIC DESIGN CATEGORY D, E AND F UP TO Sds VALUE SCHEDULED, USE 30 PSF DESIGN PRESSURE
2. MASONRY LINTELS SHALL BE SHORED DURING CONSTRUCTION AND SHALL REMAIN SHORED UNTIL MASONRY HAS GAINED 100% OF FULL SPECIFIED STRENGTH (f'm)
3. DESIGN BASED ON DESIGN SERVICE LOAD PRESSURE NOTED
4. SEE TYPICAL CMU NON-BEARING WALL ELEVATIONS FOR ADDITIONAL INFORMATION
5. FOR 6" WALLS WITH 30 PSF DESIGN PRESSURE, PROVIDE 3 BOND BEAM COURSES WITH 2-#5 IN EACH COURSE

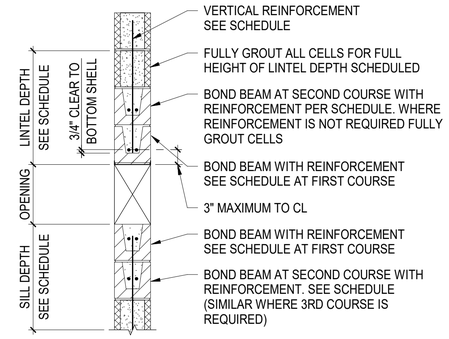

TYPICAL MASONRY SECTION AT OPENING

1 TYPICAL CMU SILL AND LINTEL SCHEDULE (NON-BEARING WALL)

NOT TO SCALE

WALL THICKNESS t	MAXIMUM WALL HEIGHT 'H'	MAX CLEAR MASONRY OPENING (SEE NOTE 4)	5 PSF			30 PSF		
			JAMB ZONE WIDTH W1 OR W2	PIER ZONE LENGTH (NOTE 2)	WALL REINF EACH CELL	JAMB ZONE WIDTH W1 OR W2	PIER ZONE LENGTH (NOTE 2)	WALL REINF EACH CELL
6"	12'-0"	4'-0"	8"	16"	#4	16"	32"	#4
		7'-0"	8"	16"	#4	24"	40"	#4
		12'-0"	8"	16"	#4	40"	64"	#4
	14'-0"	4'-0"	8"	16"	#4	24"	32"	# 5
		7'-0"	8"	16"	#4	32"	48"	# 5
		12'-0"	8"	16"/24"	#4	40"	72"	# 5
8"	12'-0"	4'-0"	8"	16"	#4	16"	16"	#4
		7'-0"	8"	16"	#4	16"	24"	#4
		12'-0"	8"	16"	#4	24"	40"	#4
	14'-6"	4'-0"	8"	16"	#4	16"	24"	#4
		7'-0"	8"	16"	#4	24"	40"	#4
		12'-0"	8"	16"/24"	#4	32"	56"	#4
	17'-0"	4'-0"	8"	16"	#4	16"	32"	# 5
		7'-0"	8"	16"	#4	24"	40"	# 5
		12'-0"	8"	16"/24"	#4	40"	64"	# 5
	19'-0"	4'-0"	8"	16"	#4	16"	32"	# 6
		7'-0"	8"	16"	#4	24"	40"	# 6
		12'-0"	16"	16"/24"	#4	40"	64"	# 6
12"	14'-0"	4'-0"	8"	16"	#4	8"	16"	#4
		7'-0"	8"	16"	#4	16"	16"	#4
		12'-0"	8"	16"/24"	#4	16"	16"/24"	2#4
	18'-0"	4'-0"	8"	16"	#4	8"	16"	2#4
		7'-0"	8"	16"	#4	16"	16"	2#4
		12'-0"	8"	16"/24"	#4	16"	24"	2#4
	22'-6"	4'-0"	8"	16"	#4	8"	16"	2#5
		7'-0"	8"	16"/24"	#4	16"	24"	2#5
		12'-0"	8"	16"/32"	#4	16"	32"	2#5
	26'-0"	4'-0"	8"	16"	#4	8"	16"	2#6
		7'-0"	8"	16"/24"	#4	16"	24"	2#6
		12'-0"	16"	16"/40"	#4	24"	32"/40"	2#6
	29'-0"	4'-0"	8"	16"/24"	#4	16"	16"/24"	2#6
		7'-0"	16"	24"/32"	#4	16"	32"	2#6
		12'-0"	16"	32"/40"	#4	24"	40"	2#6

NOTES:

1. SEE NOTE 1 OF TYPICAL CMU NON-BEARING WALL REINFORCEMENT SCHEDULE FOR DESIGN PRESSURE TO BE USED. FOR SEISMIC DESIGN CATEGORY D, E, AND F UP TO Sds VALUE SCHEDULED, USE 30 PSF DESIGN PRESSURE
2. SINGLE NUMBER FOR PIER REFERS TO PIER ZONE LENGTH. WHEN PIER WIDTH IS DENOTED AS ##/##, PROVIDE PIER AS FOLLOWS:

   EX 16"/24"
   - 16" — MINIMUM TOTAL PIER WIDTH, PW, INCLUDING ANY NON-CONTINUOUS CELLS INTERRUPTED BY LINTELS
   - 24" — MINIMUM PIER ZONE WIDTH WITH CONTINUOUS VERTICAL BARS FULL HEIGHT OF WALL
3. PROVIDE FULLY GROUTED JAMB AND PIER WITH VERTICAL BARS(S) IN EACH CELL OVER FULL WIDTH AS SCHEDULED. SEE TYPICAL CMU NON-BEARING WALL REINFORCEMENT SCHEDULE FOR REINFORCEMENT LAYOUT
4. FOR PIER ZONE SCHEDULE USE MAXIMUM CLEAR MASONRY OPENING AT LEAST EQUAL TO AVERAGE WIDTH OF ADJACENT OPENINGS
5. SEE TYPICAL CMU NON-BEARING WALL PLAN DETAIL AT ADJACENT WALL OPENINGS FOR ADDITIONAL INFORMATION
6. NOTIFY ENGINEER OF RECORD IF JAMB AND/OR PIER WIDTH NOTED CANNOT BE SATISFIED
7. AT PIERS WIDER THAN REQUIRED PER SCHEDULE, IT IS ACCEPTABLE TO REINFORCE EDGES AS JAMB ZONES

2 TYPICAL CMU NON-BEARING WALL JAMB AND PIER ZONE SCHEDULE

NOT TO SCALE

C:\Sites\N18168.00_4790 BROADWAY_R19_DWest.rvt

Client:

RANGER PROPERTIES
4790 BROADWAY
NEW YORK, NY 10034

Architect / Engineer:

FOGARTY FINGER architecture | interiors
69 Walker St, New York, NY 10013
t 212 966 7450 f 212 966 7444

Library Architect:

Andrew Berman Architect, PLLC
77 Chambers Street, 4th Floor
New York, NY 10007
Tel 212.226.5998

Structural:

Thornton Tomasetti
51 Madison Avenue
New York, NY 10010
Tel 917.661.7800

MEP / FP:

Concessi Engineering, PC
499 7th Avenue, 11th Floor South Tower
New York, NY 10018
Tel 212.629.6810

FACADE:

SIMPSON GUMPERTZ & HEGER
550 7th Avenue, 10th Floor
New York, NY 10018
Tel 212.271.7000

CODE:

METROPOLIS
22 Courtland Street, 10th Floor
New York, NY 10007
Tel 212.233.6344

No.	Date	Issue
2	DD ESTIMATING	02.06.2019
1	SCHEMATIC DESIGN	11.20.2018

Project:

4790 BROADWAY
NEW YORK, NY 10034

Drawing Title:

TYPICAL MASONRY NON-BEARING WALL SCHEDULES II

Seal & Signature:

DATE (MM-DD-YY): 02/06/19
PROJECT No.: N18168.00
DRAWING BY: AP
CHK BY: CW
DWG. No.: S-701.00
CADD FILE No.:

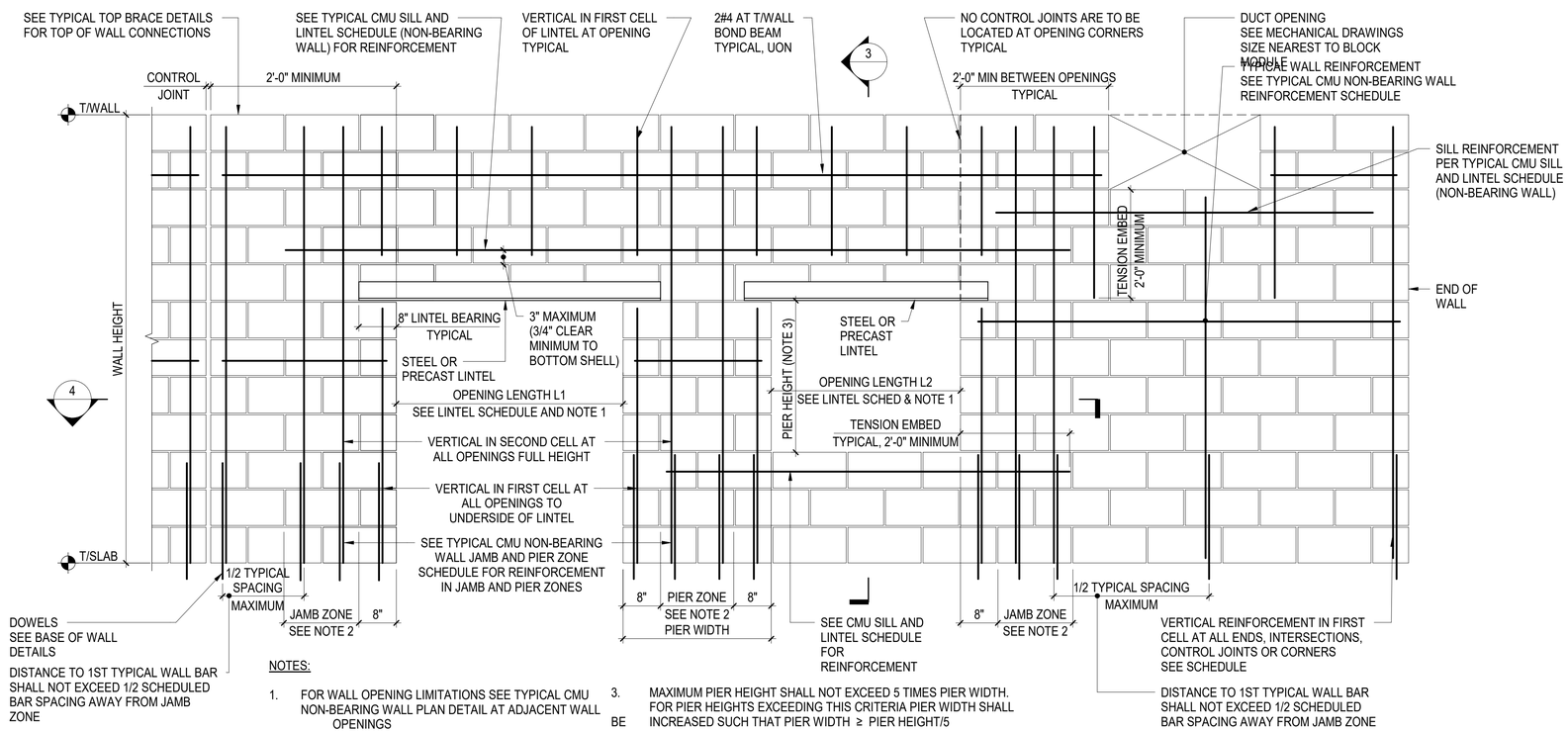

NOTES:

1. FOR WALL OPENING LIMITATIONS SEE TYPICAL CMU NON-BEARING WALL PLAN DETAIL AT ADJACENT WALL OPENINGS
2. FOR JAMB AND PIER ZONE CRITERIA SEE TYPICAL CMU NON-BEARING WALL PLAN DETAIL AT ADJACENT WALL OPENINGS
3. MAXIMUM PIER HEIGHT SHALL NOT EXCEED 5 TIMES PIER WIDTH. FOR PIER HEIGHTS EXCEEDING THIS CRITERIA PIER WIDTH SHALL BE INCREASED SUCH THAT PIER WIDTH ≥ PIER HEIGHT/5

1 TYPICAL CMU NON-BEARING WALL ELEVATION WITH STEEL OR PRECAST LINTELS

NOT TO SCALE

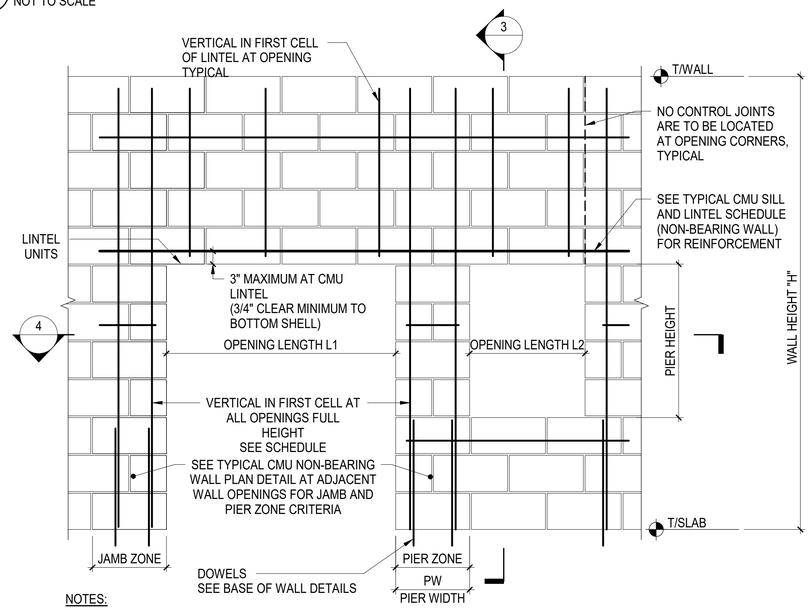

NOTES:

1. FOR WALL INFORMATION NOT SHOWN, SEE TYPICAL CMU NON- BEARING WALL ELEVATION WITH STEEL OR PRECAST LINTELS
2. SEE TYPICAL CMU SILL AND LINTEL SCHEDULE (NON-BEARING WALL) FOR ADDITIONAL INFORMATION

2 TYPICAL CMU NON-BEARING WALL ELEVATION WITH CMU LINTELS

NOT TO SCALE

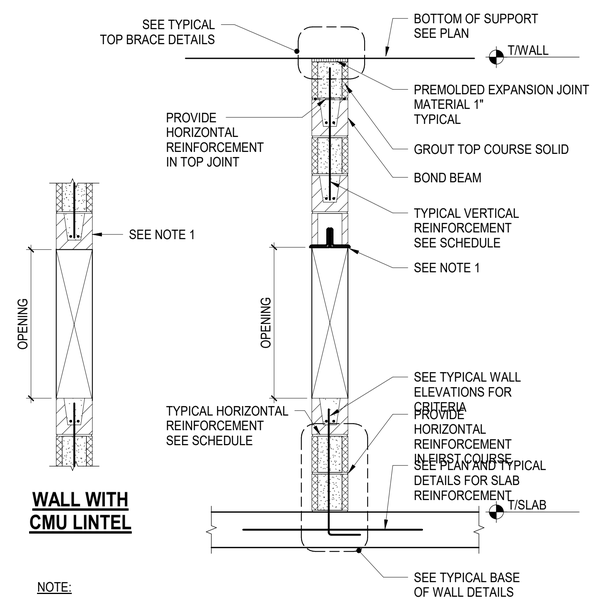

NOTE:

1. SEE TYPICAL CMU SILL AND LINTEL SCHEDULE (NON-BEARING WALL) AND/OR TYPICAL STEEL LINTEL SCHEDULE (NON-BEARING WALL) FOR ADDITIONAL INFORMATION

3 TYPICAL CMU NON-BEARING WALL SECTION

SCALE: NOT TO SCALE

Client:

RANGER PROPERTIES
4790 BROADWAY
NEW YORK, NY 10034

Architect / Engineer:

FOGARTY FINGER architecture | interiors
69 Walker St, New York, NY 10013
t 212 966 7450 f 212 966 7444

Library Architect:

Andrew Berman Architect, PLLC
77 Chambers Street, 4th Floor
New York, NY 10007
Tel 212.226.5998

Structural:

Thornton Tomasetti
51 Madison Avenue
New York, NY 10010
Tel 917.661.7800

MEP / FP:

Concessi Engineering, PC
499 7th Avenue, 11th Floor South Tower
New York, NY 10018
Tel 212.629.6810

FACADE:

SIMPSON GUMPERTZ & HEGER
550 7th Avenue, 10th Floor
New York, NY 10018
Tel 212.271.7000

CODE:

METROPOLIS
22 Courtland Street, 10th Floor
New York, NY 10007
Tel 212.233.6344

No.	Date	Issue
2	DD ESTIMATING	02.06.2019
1	SCHEMATIC DESIGN	11.20.2018

Project:

4790 BROADWAY
NEW YORK, NY 10034

Drawing Title:

TYPICAL MASONRY NON-BEARING WALL DETAILS I

Seal & Signature:

DATE (MM-DD-YY): 02/06/19
PROJECT No.: N18168.00
DRAWING BY: SB
CHK BY: CW
DWG. No.: S-702.00
CADD FILE No.:

C:\Scratch\N18168.00_4790 BROADWAY_R19_CWard.rvt

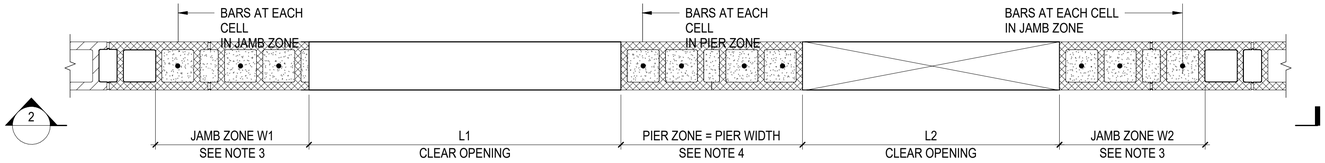

CMU WALL WITH CMU LINTEL

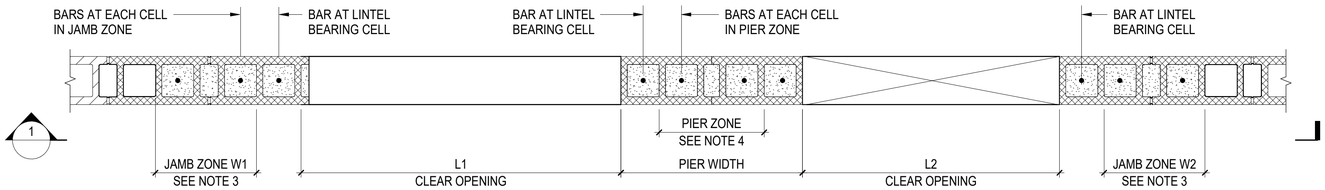

CMU WALL WITH STEEL OR PRECAST LINTEL

NOTES:

1. SEE ARCHITECTURAL DRAWINGS FOR THE EXACT LOCATION OF MASONRY WALL OPENINGS
2. SUM OF OPENING WIDTHS L1 PLUS L2 ON EITHER SIDE OF PIER SHALL NOT EXCEED 24'-0", AND ANY INDIVIDUAL OPENING SHALL NOT EXCEED 12'-0" IN WIDTH. FOR CONDITIONS EXCEEDING THIS CRITERIA, ENGINEER OF RECORD SHALL BE NOTIFIED PRIOR TO CONSTRUCTION
3. W1 AND W2 REFERS TO WIDTH OF JAMB ZONE BASED ON ADJACENT CLEAR OPENING L1 AND L2, RESPECTIVELY AS PER TYPICAL CMU NON-BEARING WALL JAMB AND PIER ZONE SCHEDULE
4. PIER ZONE REFERS TO MINIMUM WIDTH OF PIER AS SCHEDULED ON TYPICAL CMU NON-BEARING WALL JAMB AND PIER ZONE SCHEDULE
5. SEE TYPICAL CMU NON-BEARING WALL JAMB AND PIER ZONE SCHEDULE FOR REINFORCEMENT

1 TYPICAL CMU NON-BEARING WALL PLAN DETAIL AT ADJACENT WALL OPENINGS

NOT TO SCALE

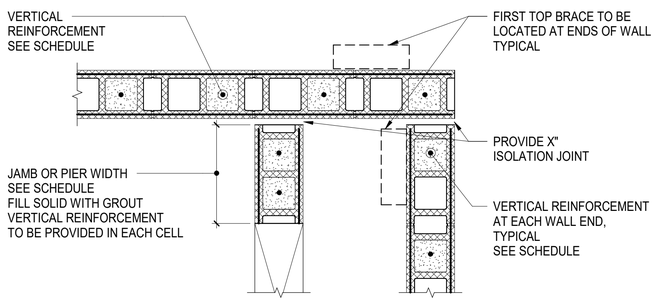

2 TYPICAL PLAN DETAIL AT FULL HEIGHT MASONRY WALL JOINT INTERSECTION

SCALE: 1" = 1'-0"

Client:

RANGER PROPERTIES
4790 BROADWAY
NEW YORK, NY 10034

Architect / Engineer:

FOGARTY FINGER architecture | interiors
69 Walker St, New York, NY 10013
t 212 966 7450 f 212 966 7444

Library Architect:

Andrew Berman Architect, PLLC
77 Chambers Street, 4th Floor
New York, NY 10007
Tel 212.226.5998

Structural:

Thornton Tomasetti
51 Madison Avenue
New York, NY 10010
Tel 917.661.7800

MEP / FP:

Concessi Engineering, PC
499 7th Avenue, 11th Floor South Tower
New York, NY 10018
Tel 212.629.6810

FACADE:

SIMPSON GUMPERTZ & HEGER
550 7th Avenue, 10th Floor
New York, NY 10018
Tel 212.271.7000

CODE:

METROPOLIS
22 Courtland Street, 10th Floor
New York, NY 10007
Tel 212.233.6344

No.	Date	Issue
2	DD ESTIMATING	02.06.2019
1	SCHEMATIC DESIGN	11.20.2018

Project:

4790 BROADWAY
NEW YORK, NY 10034

Drawing Title:

TYPICAL MASONRY NON-BEARING WALL DETAILS II

Seal & Signature:

DATE (MM-DD-YY): 02/06/19
PROJECT No.: N18168.00
DRAWING BY: AP
CHK BY: CW
DWG. No.: S-703.00
CADD FILE No.:

C:\Scratch\N18168.00_4790 BROADWAY_R19_CWard.rvt

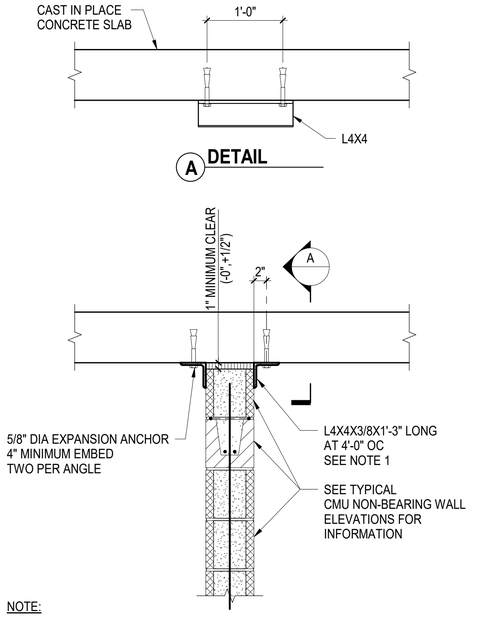

NOTE:

1. AT CONTINUOUS WALL INTERSECTIONS, SEE TYPICAL PLAN DETAIL AT MASONRY WALL
   WITH INTERLOCKED INTERSECTIONS FOR BRACE SPACING REQUIREMENTS

1 TYPICAL TOP BRACE DETAIL AT INTERIOR CMU WALL TO UNDERSIDE OF CONCRETE SLAB

SCALE: NOT TO SCALE

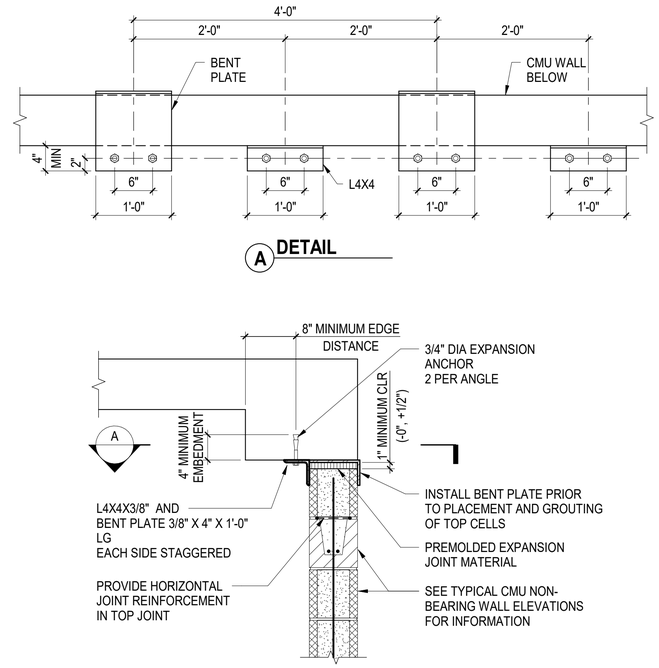

2 TYPICAL TOP BRACE DETAIL AT INTERIOR CMU WALL TO UNDERSIDE OF CONCRETE BEAM

SCALE: 1" = 1'-0"

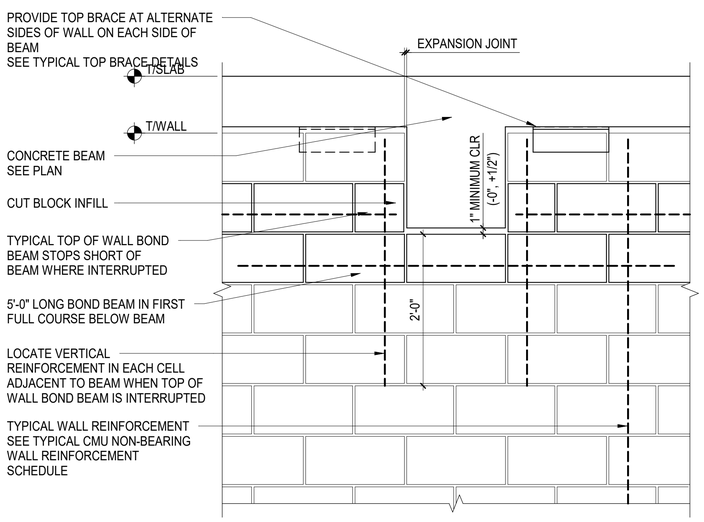

3 TYPICAL DETAIL OF CMU NON-BEARING WALL AT PERPENDICULAR CONCRETE BEAM

SCALE: NOT TO SCALE

Client:

RANGER PROPERTIES
4790 BROADWAY
NEW YORK, NY 10034

Architect / Engineer:

FOGARTY FINGER
architecture | interiors

69 Walker St, New York, NY 10013
t 212 966 7450 f 212 966 7444

Library Architect:

Andrew Berman Architect, PLLC
77 Chambers Street, 4th Floor
New York, NY 10007
Tel 212.226.5998

Structural:

Thornton Tomasetti
51 Madison Avenue
New York, NY 10010
Tel 917.661.7800

MEP / FP:

Concessi Engineering, PC
499 7th Avenue, 11th Floor South Tower
New York, NY 10018
Tel 212.629.6810

FACADE:

SIMPSON GUMPERTZ & HEGER
550 7th Avenue, 10th Floor
New York, NY 10018
Tel 212.271.7000

CODE:

METROPOLIS
22 Courtland Street, 10th Floor
New York, NY 10007
Tel 212.233.6344

No.	Date	Issue
2	DD ESTIMATING	02.06.2019
1	SCHEMATIC DESIGN	11.20.2018

Project:

4790 BROADWAY
NEW YORK, NY 10034

Drawing Title:

TYPICAL MASONRY
NON-BEARING WALL
DETAILS III

Seal & Signature:

DATE (MM-DD-YY): 02/06/19
PROJECT No.: N18168.00
DRAWING BY: SB
CHK BY: CW
DWG. No.: S-704.00
CADD FILE No.:

C:\Scratch\N18168.00_4790 BROADWAY_R19_CWard.rvt

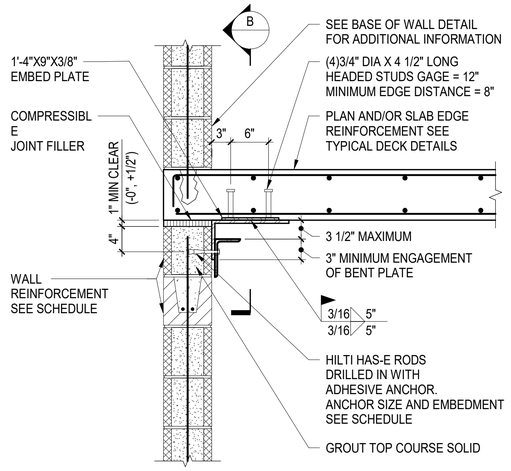

A DETAIL

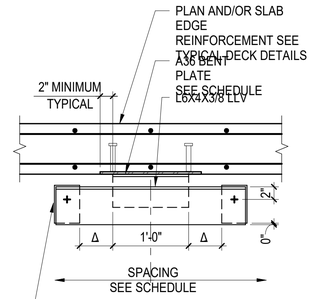

B DETAIL

EMBED PLATE AT EXTERIOR EDGE OF CONCRETE SLAB - OPTION 1

SEISMIC DESIGN CATEGORY	WALL TYPE	MAXIMUM WALL HEIGHT	ASSEMBLY SPACING	ANCHOR SIZE	ANCHOR EMBEDMENT	BENT PL THICKNESS
A, B, C	6"	14'-0"	4'-0"	3/8" DIA	3 1/2"	3/8"
A, B, C	8"	19'-0"	4'-0"	5/8" DIA	5"	3/8"
A, B, C	10"	17'-0"	4'-0"	3/4" DIA	6 5/8"	3/8"
A, B, C	10"	23'-6"	4'-0"	3/4" DIA	6 5/8"	1/2"
A, B, C	12"	26'-0"	4'-0"	3/4" DIA	6 5/8"	1/2"
A, B, C	12"	29'-0"	4'-0"	3/4" DIA	6 5/8"	5/8"
D,E, F	6"	14'-0"	4'-0"	3/8" DIA	3 1/2"	3/8"
D,E, F	8"	15-0"	4'-0"	5/8" DIA	5"	3/8"
D,E, F	8"	19'-0"	4'-0"	5/8" DIA	5"	1/2"
D,E, F	10"	23'-6"	4'-0"	3/4" DIA	6 5/8"	1/2"
D,E, F	12"	18'-0"	4'-0"	3/4" DIA	6 5/8"	1/2"
D,E, F	12"	29'-0"	3'-0"	3/4" DIA	6 5/8"	5/8"

NOTE:

1. PROVIDE ADDITIONAL SHIMS IN 1/16" MAXIMUM INCREMENTS SO BENT PLATE CAN SLIDE WITHOUT BINDING OR SHOWING SIGNIFICANT TRANSVERSE PLAY

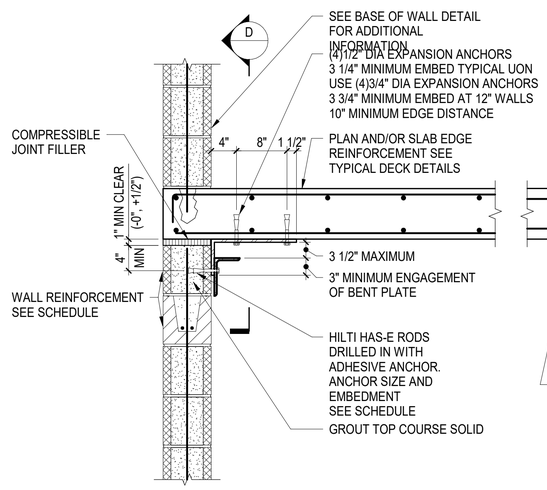

C DETAIL

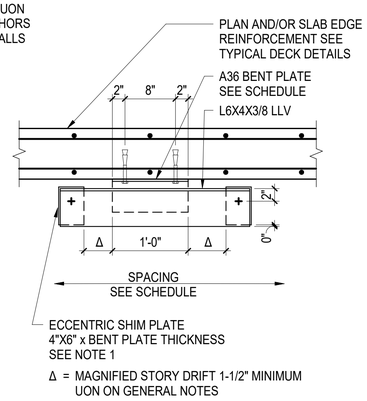

D DETAIL

POST INSTALLED AT EXTERIOR EDGE OF CONCRETE SLAB - OPTION 2

Client:

RANGER PROPERTIES
4790 BROADWAY
NEW YORK, NY 10034

Architect / Engineer:

FOGARTY FINGER architecture | interiors
69 Walker St, New York, NY 10013
t 212 966 7450 f 212 966 7444

Library Architect:

Andrew Berman Architect, PLLC
77 Chambers Street, 4th Floor
New York, NY 10007
Tel 212.226.5998

Structural:

Thornton Tomasetti
51 Madison Avenue
New York, NY 10010
Tel 917.661.7800

MEP / FP:

Concessi Engineering, PC
499 7th Avenue, 11th Floor South Tower
New York, NY 10018
Tel 212.629.6810

FACADE:

SIMPSON GUMPERTZ & HEGER
550 7th Avenue, 10th Floor
New York, NY 10018
Tel 212.271.7000

CODE:

METROPOLIS
22 Courtland Street, 10th Floor
New York, NY 10007
Tel 212.233.6344

No.	Date	Issue
2	DD ESTIMATING	02.06.2019
1	SCHEMATIC DESIGN	11.20.2018

Project:

4790 BROADWAY
NEW YORK, NY 10034

Drawing Title:

TYPICAL MASONRY NON-BEARING WALL DETAILS IV

Seal & Signature:

DATE (MM-DD-YY): 02/06/19
PROJECT No.: N18168.00
DRAWING BY: SB
CHK BY: CW
DWG. No.: S-705.00
CADD FILE No.:

C:\Sites\N18168.00_4790 BROADWAY_R19_DWest.rvt

EDGE OF SLAB DOWEL SCHEDULE				
SEISMIC DESIGN CATEGORY	IMPORTANCE FACTOR Ip	DOWEL TYPE	MAX #4 DOWEL SPACING (SEE NOTE 1)	HAIRPIN PER DETAIL D
A, B	1.0/1.5	CIP OR DRILLED IN	48"	NO
C	1.0	CIP	48"	YES
C	1.5	CIP	48" TYP UON 24" FOR WALLS H>20'-0"	YES
D,E,F	1.0/1.5	CIP	48" FOR 6" & 8" WALLS 32" FOR 10" & 12" WALLS	YES

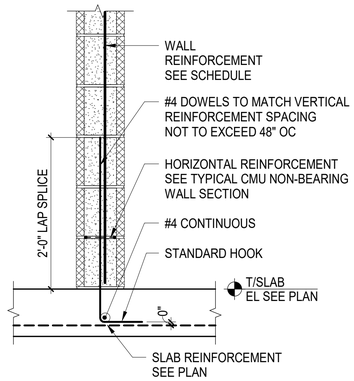

A CAST-IN DOWELS - OPTION 1 (INTERIOR WALL)

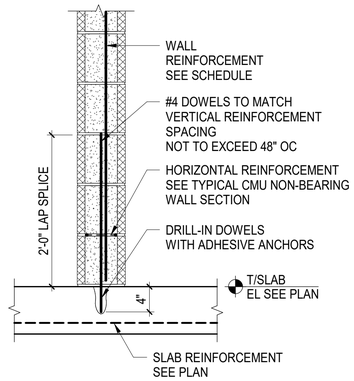

B DRILLED-IN DOWELS - OPTION 2 (INTERIOR WALL)

NOTE:

1. DETAILS ONLY APPLY WHEN ALL OF THE FOLLOWING CONDITIONS ARE MET:
   - VERTICALLY SPANNING NON-STRUCTURAL WALL BRACED AT TOP
   - NORMAL WEIGHT CONCRETE SLABS

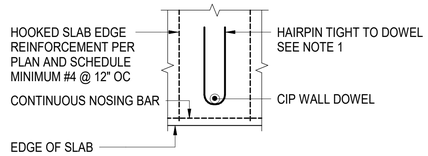

NOTE:

1. PROVIDE #3 x 1'-8" LONG HAIRPIN FOR SEISMIC DESIGN CATEGORY C; AND #4 x 2'-0" LONG HAIRPIN FOR SEISMIC DESIGN CATEGORY D, E & F

D TYPICAL ANCHOR REINFORCEMENT - PLAN

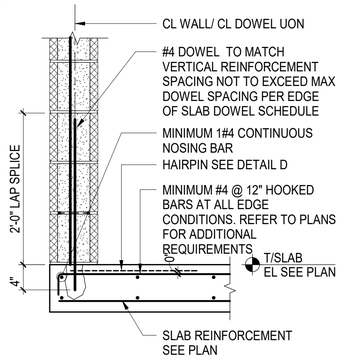

C TYPICAL DETAIL AT EDGE OF SLAB

Client:

RANGER PROPERTIES
4790 BROADWAY
NEW YORK, NY 10034

Architect / Engineer:

FOGARTY FINGER architecture | interiors
69 Walker St, New York, NY 10013
t 212 966 7450 f 212 966 7444

Library Architect:

Andrew Berman Architect, PLLC
77 Chambers Street, 4th Floor
New York, NY 10007
Tel 212.226.5998

Structural:

Thornton Tomasetti
51 Madison Avenue
New York, NY 10010
Tel 917.661.7800

MEP / FP:

Concessi Engineering, PC
499 7th Avenue, 11th Floor South Tower
New York, NY 10018
Tel 212.629.6810

FACADE:

SIMPSON GUMPERTZ & HEGER
550 7th Avenue, 10th Floor
New York, NY 10018
Tel 212.271.7000

CODE:

METROPOLIS
22 Courtland Street, 10th Floor
New York, NY 10007
Tel 212.233.6344

No.	Date	Issue
2	DD ESTIMATING	02.06.2019
1	SCHEMATIC DESIGN	11.20.2018

Project:

4790 BROADWAY
NEW YORK, NY 10034

Drawing Title:

TYPICAL MASONRY NON-BEARING WALL DETAILS V

Seal & Signature:

DATE (MM-DD-YY): 02/06/19
PROJECT No.: N18168.00
DRAWING BY: SB
CHK BY: CW
DWG. No.: S-706.00
CADD FILE No.:

C:\Scratch\N18168.00_4790 BROADWAY_R19_CWand.rvt

MECHANICAL SYMBOL LIST

THESE SYMBOLS ARE STANDARDS AND DO NOT NECESSARILY ALL APPEAR ON DRAWINGS

	ACOUSTIC LINING		CHECK VALVE
	NEW OR RELOCATED DUCTWORK, PIPING OR EQUIPMENT.		BALANCING VALVE (BV)
	EXISTING DUCTWORK, PIPING OR EQUIPMENT TO REMAIN.		2-WAY CONTROL VALVE (CV)
	EXISTING DUCTWORK, PIPING OR EQUIPMENT TO BE REMOVED.		PRESSURE RELIEF VALVE (PR)
CD 4-WAY 3-WAY	CEILING DIFFUSER		PRESSURE REDUCING VALVE (PRV)
CR	CEILING REGISTER		VALVE ON RISER
CG	CEILING GRILLE.		PRESSURE GAUGE WITH SHUTOFF VALVE
VD	VOLUME DAMPER		STRAINER WITH BLOWOFF VALVE (ST)
FSD/AD	COMBINATION FIRE SMOKE DAMPER AND ACCESS DOOR		PIPE TURNED UP
FD/AD	FIRE DAMPER & ACCESS DOOR		PIPE TURNED DOWN
SD	DUCT MOUNTED SMOKE DETECTOR		THERMOMETER WITH THERMOWELL
Tp	AIR TEST POINT LOCATION		UNION
T	THERMOSTAT		AIR VENT (AV)
D	DIAPHRAGM ACTUATOR		FLANGE CONNECTION
TA	TRANSFER AIR DUCT ABOVE HUNG CEILING	C	CONDENSATE
TA	TRANSFER AIR DUCT ABOVE HUNG CEILING WITH 1" ACOUSTIC LINING		DIRECTION OF FLOW
	DOOR LOUVER	P	DIRECTION OF PITCH
Sp	PILOT LIGHT SWITCH		CHANGE IN DUCT SIZE
	POINT OF CONNECTION TO EXISTING		SUPPLY DUCT UP
	POINT OF DISCONNECT		SUPPLY DUCT DN
EHC	ELECTRIC HEATER COIL		RETURN/EXH. DUCT UP
1	NUMBER IN HEX INDICATES WORK TO BE DONE. SEE MECH. NOTES		RETURN/EXH. DUCT DN.
	CONTROL VALVE		DUCT WITH TURNING VANES
	FLOW CONTROL VALVE (FCV)	FD/AD	FIRE DAMPER WITH ACCESS DOOR
	GATE VALVE	M	MOTORIZED DAMPER

MECHANICAL ABBREVIATION LIST

THESE SYMBOLS ARE STANDARDS AND DO NOT NECESSARILY ALL APPEAR ON DRAWINGS

AC	AIR CONDITIONING UNIT	GC	GENERAL CONTRACTOR
AD	ACCESS DOOR	GEF	GENERAL EXHAUST FAN
AL	ACOUSTIC LINING	GPM	GALLONS PER MINUTE
ATC	AUTOMATIC TEMPERATURE CONTROL	HPC	HIGH PRESSURE STEAM CONDENSATE
CD	CEILING DIFFUSER	HPS	HIGH PRESSURE STEAM SUPPLY
CFM	CUBIC FEET PER MINUTE	KEF	KITCHEN EXHAUST FAN
CG	CEILING GRILLE	LPC	LOW PRESSURE STEAM CONDENSATE
CHWR	CHILLED WATER RETURN	LPS	LOW PRESSURE STEAM SUPPLY
CHWS	CHILLED WATER SUPPLY	LWT	LEAVING WATER TEMPERATURE
CP	CONDENSATE PUMP	MAF	MAKE-UP AIR FAN
CR	CEILING REGISTER	MBH	THOUSAND BTU PER HOUR
CWR	CONDENSER WATER RETURN	MD	MOTORIZED DAMPER
CWS	CONDENSER WATER SUPPLY	N	NEW
E	EXISTING	NC	NORMALLY CLOSED
EDH	ELECTRIC DUCT HEATER	NO	NORMALLY OPEN
EF	EXHAUST FAN	PO	PRESSURE DROP
ER	EXISTING TO BE REMOVED AND RELOCATED	SD	SPLITTER DAMPER
ETR	EXISTING TO REMAIN.	TA	TRANSFER AIR DUCT
EWT	ENTERING WATER TEMPERATURE	TEF	TOILET EXHAUST FAN
FC	FLEXIBLE CONNECTION	TYP.	TYPICAL
FD	FIRE DAMPER	VAV	VARIABLE AIR VOLUME
FSD	COMBINATION FIRE/SMOKE DAMPER	WMS	WIRE MESH SCREEN

DEPARTMENT OF BUILDING NOTES (AS APPLICABLE):

ALL WORK SHALL COMPLY WITH THE APPLICABLE SECTIONS OF THE 2016 BUILDING CODE, CITY OF NEW YORK, EFFECTIVE JANUARY 1, 2015, AND ALL AMENDMENTS AND RULES AND REGULATIONS OF THE DEPARTMENT OF BUILDINGS TO-DATE. INSPECTIONS AND SIGN-OFF OF COMPLETED WORK SHALL BE MADE AS PER ARTICLE 28-118 OF THE GENERAL ADMINISTRATIVE PROVISIONS.

1. THE FOLLOWING SPECIAL INSPECTIONS ARE REQUIRED BY THE NYC BUILDING CODE AND HVAC SYSTEMS:

   A. MECHANICAL SYSTEMS – BC 1704.16
   B. MECHANICAL AND ELECTRICAL COMPONENTS – BC 1707.7
   C. ENERGY CODE COMPLIANCE – BC 110.3.5
   D. SMOKE CONTROL SYSTEMS – BC 1704.15
   E. SEISMIC ISOLATION SYSTEMS – BC 1707.8
   F. SPECIAL CASES – BC 1704.14
   G. HEATING SYSTEMS – BC 1704.25

2. THE FOLLOWING PERIODIC SPECIAL INSPECTIONS ARE REQUIRED BY THE NYC BUILDING CODE FOR HVAC SYSTEMS:

   A. FIRE DAMPERS – BC 110.3.4
   B. ENERGY CODE COMPLIANCE – BC 110.3.5
   C. WELDING OPERATIONS OF HIGH PRESSURE STEAM PIPING – BC 1704.18.2
   D. THROUGH-PENETRATION FIRE STOP SYSTEMS – BC 1704.27
   E. HVAC PIPING CONTAINING FLAMMABLE, COMBUSTIBLE OR HIGHLY TOXIC CONTENTS AND THEIR ASSOCIATED MECHANICAL UNITS AND STRUCTURES ASSIGNED TO SEISMIC DESIGN CATEGORY C OR D – BC 1707.7
   F. SEISMIC ISOLATION AND ENERGY DISSIPATION DEVICES – BC 1707.8
   G. HVAC DUCTWORK CONTAINING HAZARDOUS MATERIALS IN STRUCTURES ASSIGNED TO SEISMIC DESIGN CATEGORY C OR D – BC 1707.7

3. TESTS OF MECHANICAL SYSTEMS SHALL BE PERFORMED IN ACCORDANCE WITH SECTION MC 107 AND THE FOLLOWING SECTIONS OF THE NEW YORK CITY MECHANICAL CODE:

   A. SMOKE CONTROL SYSTEMS – MC 513.3
   B. REFRIGERATION SYSTEMS – MC 1108
   C. HYDRONIC PIPING SYSTEMS – MC 1208
   D. VENTILATION SYSTEM BALANCING – MC 403.8
   E. VENTILATION SYSTEM SERVING COMMERCIAL COOKING APPLIANCES – MC 507.16

4. THE OWNER SHALL ENGAGE THE SERVICES OF A PROFESSIONAL ENGINEER TO PROVIDE THE REQUIRED SPECIAL INSPECTIONS AND TESTS. THE CONTRACTOR SHALL COORDINATE ALL FIELD DEMONSTRATIONS TESTS ETC. AS REQUIRED FOR ALL PROGRESqsS AND FINAL SPECIAL INSPECTIONS:

   A. UPON COMPLETION OF THE VENTILATION SYSTEM:

      1) A TEST SHALL BE CONDUCTED IN THE PRESENCE OF AND UNDER THE DIRECTION OF A LICENSED PROFESSIONAL ENGINEER QUALIFIED TO CONDUCT SUCH TESTS. THE TESTS SHALL SHOW COMPLIANCE WITH THE CODE REQUIREMENTS FOR VENTILATION AND THE PROPER FUNCTIONING OF ALL SMOKE DETECTION, FIRE PROTECTION AND OPERATING DEVICES BEFORE THE SYSTEM IS APPROVED.

      2) THE LICENSED PROFESSIONAL ENGINEER WHO CONDUCTS THE TESTS SHALL FILE A CERTIFICATE AS TO WHETHER THE SYSTEM COMPLIES WITH THE APPLICABLE LAWS. THEY SHALL BE MADE IN A MANNER SATISFACTORY TO THE OWNER.

5. THE FOLLOWING WORK ITEMS, COMPONENTS, MATERIALS, CAPACITIES, ETC., SHALL COMPLY WITH THE REFERENCE CODE OR STANDARD:

   A. STANDARDS OF HEATING – MC 309.1
   B. NOISE CONTROL – MC 928
   C. DUCT CONSTRUCTION AND SUPPORT – MC 603
   D. AIR INTAKES, EXHAUSTS AND RELIEFS – MC 401.5
   E. AIR FILTERS – MC 605
   F. FIRE DAMPERS, SMOKE DAMPERS AND SMOKE DETECTORS – MC 607
   G. MANUAL AND AUTOMATIC, FIRE AND SMOKE CONTROLS FOR AIR DISTRIBUTION SYSTEMS – MC 513
   H. PIPING AND INSULATION – MC 1201

6. MINIMUM TEMPERATURE TO BE MAINTAINED IN OCCUPIED SPACES DURING HEATING SEASON SHALL BE 68°F.

7. VENTILATION FOR ALL AREAS SHALL COMPLY WITH MC 401.

8. A STATEMENT SHALL BE FILED BY THE OWNER OR TENANT IN POSSESSION THAT THE VENTILATING SYSTEM WILL BE KEPT IN CONTINUOUS OPERATION AT ALL TIMES DURING THE NORMAL OCCUPANCY OF THE STRUCTURE, AS REQUIRED BY CODE MC 401.2 & 401.3.

9. ALL FIRE DAMPERS SHALL BE ACCEPTED FOR USE BY THE NEW YORK CITY DEPARTMENT OF BUILDINGS SHALL BE MANUFACTURED AND INSTALLED IN ACCORDANCE WITH UL 555, STANDARD FOR DAMPERS AND CEILING DAMPERS.

10. COMBINATION FIRE/SMOKE DAMPERS SHALL BE ACCEPTED FOR USE BY THE NEW YORK CITY DEPARTMENT OF BUILDINGS SHALL BE MANUFACTURED AND INSTALLED IN ACCORDANCE WITH UL 555S.

11. SMOKE DETECTORS, COMBINATION FIRE/SMOKE DAMPERS AND SMOKE DAMPERS SHALL BE INSTALLED AS REQUIRED TO CLOSE DAMPERS AND AUTOMATICALLY STOP THE FAN – MC 606.

12. REFER TO ARCHITECTURAL DRAWINGS FOR REQUIRED FIRE RATED WALL AND SMOKE WALL CONSTRUCTION AND LOCATION.

13. THESE PLANS ARE APPROVED ONLY FOR THE WORK INDICATED ON THE APPLICATION SPECIFICATION SHEET. ALL OTHER MATTERS SHOWN ARE NOT TO BE RELIED UPON OR TO BE CONSIDERED AS EITHER BEING APPROVED OR IN ACCORDANCE WITH APPLICABLE CODE.

14. TO THE BEST OF THE APPLICANT'S KNOWLEDGE, BELIEF AND PROFESSIONAL JUDGEMENT, THESE PLANS ARE IN COMPLIANCE WITH THE ENERGY CONSERVATION CONSTRUCTION CODE OF NEW YORK STATE.

15. TESTS OF SOUND POWER LEVEL OF MECHANICAL EQUIPMENT SHALL BE CONDUCTED AND RESULTS SUBMITTED WHERE WINDOWS OF A DWELLING UNIT ARE WITHIN 100 FEET OF EQUIPMENT. THE SOUND PRESSURE LEVEL SHALL NOT EXCEED THE LEVELS GIVEN IN MC 928.

ENERGY CODE PROGRESS INSPECTIONS: TR8

ITEM	TABLE REFERENCE IN 1RCNY #5000-01(h) (1) AND (2)
HVAC AND SERVICE WATER HEATING EQUIPMENT	(IB3), (IIB3)
HVAC AND SERVICE WATER HEATING SYSTEM CONTROLS	(IB4), (IIB4)
HVAC INSULATION AND SEALING	(IB5), (IIB5)
DUCT LEAKAGE TESTING	(IB6), (IIB6)
MAINTENANCE INFORMATION	(ID1), (IID1)
INTERIOR LIGHTING POWER	(IIC3)
LIGHTING CONTROLS	(IIC5)
EXIT SIGNS	(IIC6)

SUBMITTAL SCHEDULE

ITEM	SHOP DRAWINGS/ REPORTS	CATALOG CUTS
DUCTWORK (INCLUDE SIZE OF EXIST. DUCTS)	2 PRINTS 1 PDF	
AS-BUILT DRAWINGS	1 PRINT 1 PDF	
TESTING & BALANCING	REPORT	1 PRINT 1 PDF
AIR OUTLETS		1 PRINT 1 PDF
PIPING		1 PRINT 1 PDF
CONTROLS		1 PRINT 1 PDF

MECHANICAL DRAWING LIST

	DWG NO.	TITLE
1	M-101.00	MECHANICAL SYMBOLS, ABBREVIATIONS AND NOTES
2	M-201.00	MECHANICAL CELLAR DUCTWORK PLAN
3	M-202.00	MECHANICAL GROUND FLOOR DUCTWORK PLAN
4	M-203.00	MECHANICAL 2ND FLOOR DUCTWORK PLAN
5	M-204.00	MECHANICAL 3RD FLOOR DUCTWORK PLAN
6	M-205.00	MECHANICAL 4TH-10TH FLOOR DUCTWORK PLAN
7	M-206.00	MECHANICAL 11TH-13TH FLOOR DUCTWORK PLAN
8	M-207.00	MECHANICAL 14TH FLOOR DUCTWORK PLAN
9	M-208.00	MECHANICAL BULKHEAD ROOF DUCTWORK PLAN
10	M-301.00	MECHANICAL CELLAR PIPING PLAN
11	M-302.00	MECHANICAL GROUND FLOOR PIPING PLAN
12	M-303.00	MECHANICAL 2ND FLOOR PIPING PLAN
13	M-304.00	MECHANICAL 3RD FLOOR PIPING PLAN
14	M-305.00	MECHANICAL 4TH-10TH FLOOR PIPING PLAN
15	M-306.00	MECHANICAL 11TH-13TH FLOOR PIPING PLAN
16	M-307.00	MECHANICAL 14TH FLOOR PIPING PLAN
17	M-308.00	MECHANICAL BULKHEAD PIPING PLAN
18	M-401.00	MECHANICAL AIR RISER DIAGRAM
19	M-402.00	MECHANICAL HOT WATER RISER DIAGRAM
20	M-403.00	MECHANICAL CHILLED WATER RISER DIAGRAM
21	M-501.00	MECHANICAL SCHEDULES SHEET #1 OF 2
22	M-502.00	MECHANICAL SCHEDULES SHEET #2 OF 2
23	M-601.00	MECHANICAL DETAILS SHEET #1 OF 5
24	M-602.00	MECHANICAL DETAILS SHEET #2 OF 5
25	M-603.00	MECHANICAL DETAILS SHEET #3 OF 5
26	M-604.00	MECHANICAL DETAILS SHEET #4 OF 5
27	M-605.00	MECHANICAL DETAILS SHEET #5 OF 5

SPECIAL INSPECTIONS

ITEM	CODE/SECTION
MECHANICAL SYSTEMS	BC 1704.16
HEATING SYSTEMS	BC 1704.25
CHIMNEYS	BC 1704.26
FIRE-RESISTANT PENETRATIONS AND JOINTS	BC 1704.27
ENERGY CODE COMPLIANCE INSPECTIONS	BC 110.3.5
FINAL*	28-116.2.4.2, BC 110.5, DIRECTIVE 14 OF 1975, AND 1 RCNY §101-10

CERTIFICATION
TO THE BEST OF THE APPLICANT'S KNOWLEDGE, BELIEF AND PROFESSIONAL JUDGMENT, THESE PLANS ARE IN COMPLIANCE WITH THE 2016 NYCECC.

BUILDING DEPARTMENT NOTE: "THIS PLAN IS APPROVED ONLY FOR WORK INDICATED ON THE APPLICATION SPECIFICATION SHEET. ALL OTHER MATTERS SHOWN ARE NOT TO BE RELIED UPON, OR TO BE CONSIDERED AS EITHER BEING APPROVED OR IN ACCORDANCE WITH APPLICABLE CODES".

ALTERATION OR RE-USE OF THIS DRAWING FOR OTHER THAN THIS PROJECT WITHOUT WRITTEN CONSENT OF THE ABOVE ENGINEER IS PROHIBITED BY LAW.

Client:
RANGER PROPERTIES
4790 BROADWAY
NEW YORK, NY 10034

Architect:
FOGARTY FINGER architecture | interiors
69 Walker St, New York, NY 10013
t 212 966 7450 f 212 966 7444

Library Architect:
Andrew Berman Architect, PLLC
77 Chambers Street, 4th Floor
New York, NY 10007
Tel 212.22[illegible]5998

Structural:
Thornton Tomasetti
51 Madison Avenue
New York, NY 10010
Tel 917.[illegible]1.7800

MEP / FP:
Concessi Engineering, PC
499 7th Avenue, 11th Floor South Tower
New York, NY 10018
Tel 212.[illegible]29.[illegible]810

FACADE:
SIMPSON GUMPERTZ HEGER
550 7th Avenue, 10th Floor
New York, NY 10018
Tel 212.271.7000

CODE:
METROPOLIS
22 Courtland Street, 10th Floor
New York, NY 10007
Tel 212.233.[illegible]344

No.	Date	Issue
3	02/06/19	ISSUED FOR FILING / DD ESTIMATING
2	01/29/19	ISSUED FOR PROGRESS
1	01/04/19	ISSUED FOR PROGRESS & COORDINATION

Project:
4790 BROADWAY
NEW YORK, NY 10034

Drawing Title:
MECHANICAL SYMBOLS, ABBREVIATIONS AND NOTES

Seal & Signature:
STATE OF NEW YORK · ROBERT V. CONCESSI · No. 86705 · LICENSED PROFESSIONAL ENGINEER

DATE (MM-DD-YY): 11-02-2018
PROJECT No.: 7815.00
DRAWING BY: SA
CHK BY: RD/RC
DWG. No.: M-101.00
CADD FILE No.: –
01 OF 27

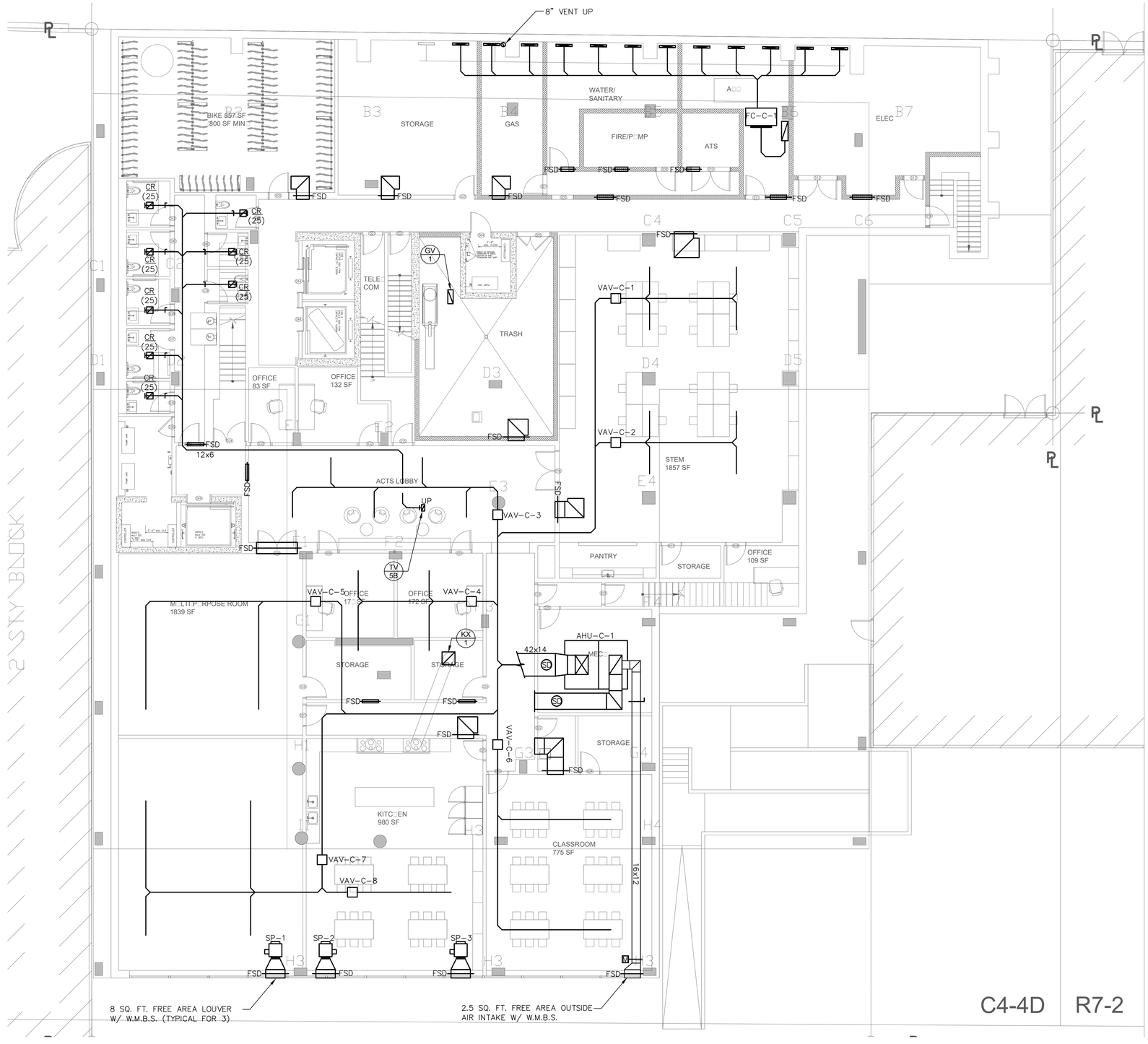

1 CELLAR FLOOR PLAN

SCALE: 1/8"=1'-0"

BUILDING DEPARTMENT NOTE: "THIS PLAN IS APPROVED ONLY FOR WORK INDICATED ON THE APPLICATION SPECIFICATION SHEET. ALL OTHER MATTERS SHOWN ARE NOT TO BE RELIED UPON, OR TO BE CONSIDERED AS EITHER BEING APPROVED OR IN ACCORDANCE WITH APPLICABLE CODES".

ALTERATION OR RE-USE OF THIS DRAWING FOR OTHER THAN THIS PROJECT WITHOUT WRITTEN CONSENT OF THE ABOVE ENGINEER IS PROHIBITED BY LAW.

Client:

RANGER PROPERTIES
4790 BROADWAY
NEW YORK, NY 10034

Architect:

FOGARTY FINGER
architecture | interiors

69 Walker St, New York, NY 10013
t 212 966 7450 f 212 966 7444

Library Architect:

Andrew Berman Architect, PLLC
77 Chambers Street, 4th Floor
New York, NY 10007
Tel 212.22[illegible]5998

Structural:

Thornton Tomasetti
51 Madison Avenue
New York, NY 10010
Tel 917.[illegible]1.7800

MEP / FP:

Concessi Engineering, PC
499 7th Avenue, 11th Floor South Tower
New York, NY 10018
Tel 212.[illegible]29.[illegible]810

FACADE:

SIMPSON GUMPERTZ HEGER
550 7th Avenue, 10th Floor
New York, NY 10018
Tel 212.271.7000

CODE:

METROPOLIS
22 Courtland Street, 10th Floor
New York, NY 10007
Tel 212.233.[illegible]344

No.	Date	Issue
3	02/06/19	ISSUED FOR FILING / DD ESTIMATING
2	01/29/19	ISSUED FOR PROGRESS
1	01/04/19	ISSUED FOR PROGRESS & COORDINATION

Project:

4790 BROADWAY
NEW YORK, NY 10034

Drawing Title:

MECHANICAL
CELLAR FLOOR
DUCTWORK PLAN

Seal & Signature:

STATE OF NEW YORK · ROBERT V. CONCESSI · No. 86705 · LICENSED PROFESSIONAL ENGINEER

DATE (MM-DD-YY):	11-02-2018
PROJECT No.:	7815.00
DRAWING BY:	SA
CHK BY:	RD/RC
DWG. No.:	M-201.00
CADD FILE No.:	02 OF 27

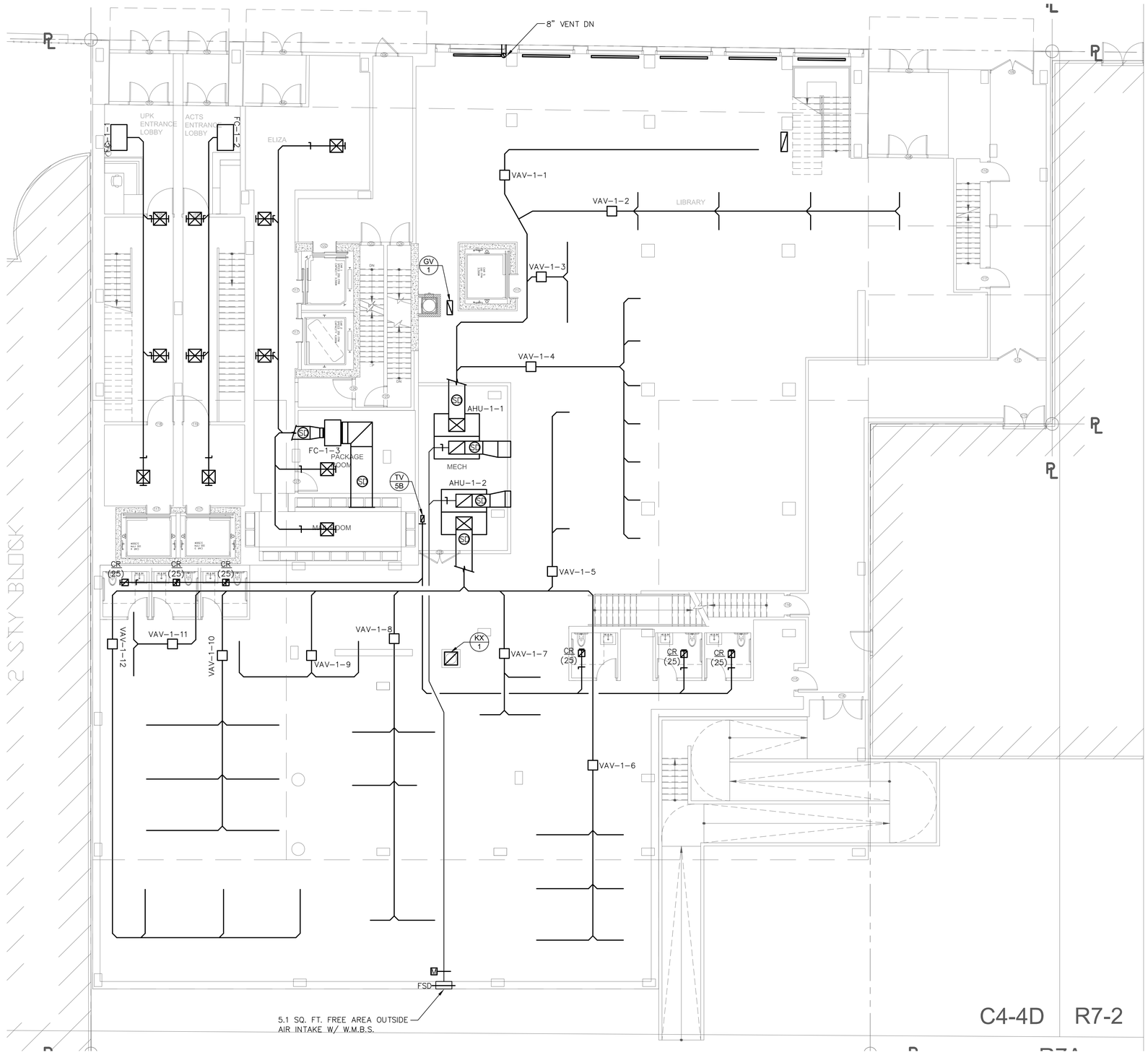

1 1ST FLOOR PLAN
SCALE: 1/8"=1'-0"

BUILDING DEPARTMENT NOTE: "THIS PLAN IS APPROVED ONLY FOR WORK INDICATED ON THE APPLICATION SPECIFICATION SHEET. ALL OTHER MATTERS SHOWN ARE NOT TO BE RELIED UPON, OR TO BE CONSIDERED AS EITHER BEING APPROVED OR IN ACCORDANCE WITH APPLICABLE CODES".

ALTERATION OR RE-USE OF THIS DRAWING FOR OTHER THAN THIS PROJECT WITHOUT WRITTEN CONSENT OF THE ABOVE ENGINEER IS PROHIBITED BY LAW.

Client:

RANGER PROPERTIES
4790 BROADWAY
NEW YORK, NY 10034

Architect:

FOGARTY FINGER
architecture | interiors

69 Walker St, New York, NY 10013
t 212 966 7450 f 212 966 7444

Library Architect:

Andrew Berman Architect, PLLC
77 Chambers Street, 4th Floor
New York, NY 10007
Tel 212.22[illegible]5998

Structural:

Thornton Tomasetti
51 Madison Avenue
New York, NY 10010
Tel 917.[illegible]1.7800

MEP / FP:

Concessi Engineering, PC
499 7th Avenue, 11th Floor South Tower
New York, NY 10018
Tel 212.[illegible]29.[illegible]810

FACADE:

SIMPSON GUMPERTZ HEGER
550 7th Avenue, 10th Floor
New York, NY 10018
Tel 212.271.7000

CODE:

METROPOLIS
22 Courtland Street, 10th Floor
New York, NY 10007
Tel 212.233.[illegible]344

No.	Date	Issue
4	02/06/19	ISSUED FOR FILING / DD ESTIMATING
3	01/29/19	ISSUED FOR PROGRESS
2	01/04/19	ISSUED FOR PROGRESS & COORDINATION
1	12/13/18	ISSUED FOR PROGRESS

Project:

4790 BROADWAY
NEW YORK, NY 10034

Drawing Title:

MECHANICAL GROUND FLOOR DUCTWORK PLAN

Seal & Signature:

STATE OF NEW YORK · ROBERT L. CONCESSI · No. 86705 · LICENSED PROFESSIONAL ENGINEER

DATE (MM-DD-YY):	11-02-2018
PROJECT No.:	7815.00
DRAWING BY:	EF
CHK BY:	MV/RC
DWG. No.:	M-202.00
CADD FILE No.:	03 OF 27

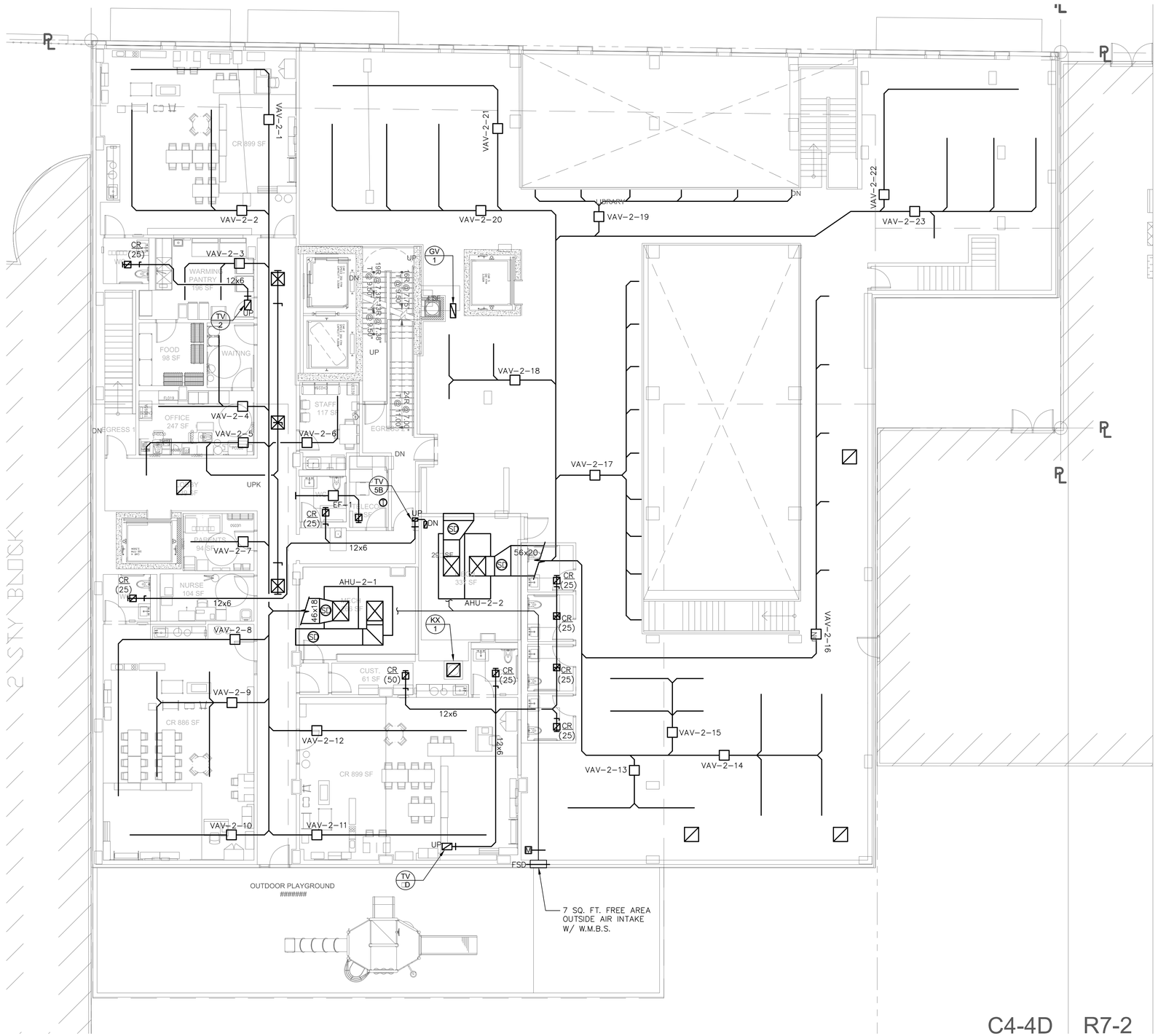

1 2ND FLOOR PLAN
SCALE: 1/8"=1'-0"

BUILDING DEPARTMENT NOTE: "THIS PLAN IS APPROVED ONLY FOR WORK INDICATED ON THE APPLICATION SPECIFICATION SHEET. ALL OTHER MATTERS SHOWN ARE NOT TO BE RELIED UPON, OR TO BE CONSIDERED AS EITHER BEING APPROVED OR IN ACCORDANCE WITH APPLICABLE CODES".

ALTERATION OR RE-USE OF THIS DRAWING FOR OTHER THAN THIS PROJECT WITHOUT WRITTEN CONSENT OF THE ABOVE ENGINEER IS PROHIBITED BY LAW.

Client:

RANGER PROPERTIES
4790 BROADWAY
NEW YORK, NY 10034

Architect:

FOGARTY FINGER
architecture | interiors

69 Walker St, New York, NY 10013
t 212 966 7450 f 212 966 7444

Library Architect:

Andrew Berman Architect, PLLC
77 Chambers Street, 4th Floor
New York, NY 10007
Tel 212.22[illegible]5998

Structural:

Thornton Tomasetti
51 Madison Avenue
New York, NY 10010
Tel 917.[illegible]1.7800

MEP / FP:

Concessi Engineering, PC
499 7th Avenue, 11th Floor South Tower
New York, NY 10018
Tel 212.[illegible]29.[illegible]810

FACADE:

SIMPSON GUMPERTZ HEGER
550 7th Avenue, 10th Floor
New York, NY 10018
Tel 212.271.7000

CODE:

METROPOLIS
22 Courtland Street, 10th Floor
New York, NY 10007
Tel 212.233.[illegible]344

No.	Date	Issue
4	02/06/19	ISSUED FOR FILING / DD ESTIMATING
3	01/29/19	ISSUED FOR PROGRESS
2	01/04/19	ISSUED FOR PROGRESS & COORDINATION
1	12/13/18	ISSUED FOR PROGRESS

Project:

4790 BROADWAY
NEW YORK, NY 10034

Drawing Title:

MECHANICAL
2ND FLOOR
DUCTWORK PLAN

Seal & Signature:

STATE OF NEW YORK · ROBERT L. CONCESSI · No. 86705 · LICENSED PROFESSIONAL ENGINEER

DATE (MM-DD-YY):	11-02-2018
PROJECT No.:	7815.00
DRAWING BY:	SA
CHK BY:	RD/RC
DWG. No.:	M-203.00
CADD FILE No.:	–

04 OF 27

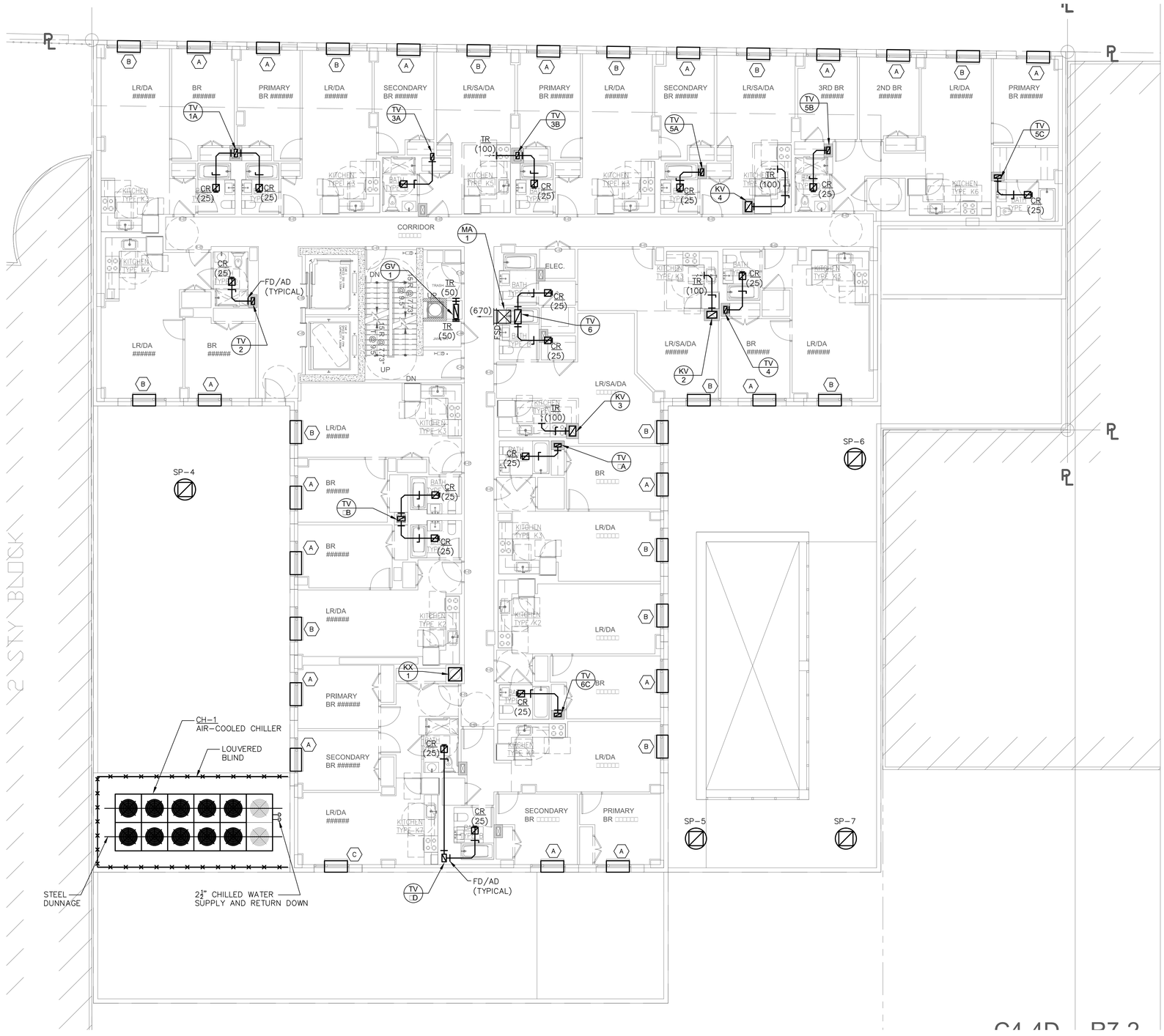

1 3RD FLOOR PLAN
SCALE: 1/8"=1'-0"

BUILDING DEPARTMENT NOTE: "THIS PLAN IS APPROVED ONLY FOR WORK INDICATED ON THE APPLICATION SPECIFICATION SHEET. ALL OTHER MATTERS SHOWN ARE NOT TO BE RELIED UPON, OR TO BE CONSIDERED AS EITHER BEING APPROVED OR IN ACCORDANCE WITH APPLICABLE CODES".

ALTERATION OR RE-USE OF THIS DRAWING FOR OTHER THAN THIS PROJECT WITHOUT WRITTEN CONSENT OF THE ABOVE ENGINEER IS PROHIBITED BY LAW.

Client:

RANGER PROPERTIES
4790 BROADWAY
NEW YORK, NY 10034

Architect:

FOGARTY FINGER
architecture | interiors

69 Walker St, New York, NY 10013
t 212 966 7450 f 212 966 7444

Library Architect:

Andrew Berman Architect, PLLC
77 Chambers Street, 4th Floor
New York, NY 10007
Tel 212.22[illegible]5998

Structural:

Thornton Tomasetti
51 Madison Avenue
New York, NY 10010
Tel 917.[illegible]1.7800

MEP / FP:

Concessi Engineering, PC
499 7th Avenue, 11th Floor South Tower
New York, NY 10018
Tel 212.[illegible]29.[illegible]810

FACADE:

SIMPSON GUMPERTZ [illegible] HEGER
550 7th Avenue, 10th Floor
New York, NY 10018
Tel 212.271.7000

CODE:

METROPOLIS
22 Courtland Street, 10th Floor
New York, NY 10007
Tel 212.233.[illegible]344

No.	Date	Issue
3	02/06/19	ISSUED FOR FILING / DD ESTIMATING
2	01/29/19	ISSUED FOR PROGRESS
1	01/04/19	ISSUED FOR PROGRESS & COORDINATION

Project:

4790 BROADWAY
NEW YORK, NY 10034

Drawing Title:

MECHANICAL 3RD FLOOR DUCTWORK PLAN

Seal & Signature:

STATE OF NEW YORK · ROBERT L. CONCESSI · No. 86705 · LICENSED PROFESSIONAL ENGINEER

DATE (MM-DD-YY):	11-02-2018
PROJECT No.:	7815.00
DRAWING BY:	SA
CHK BY:	RD/RC
DWG. No.:	M-204.00
CADD FILE No.:	05 OF 27

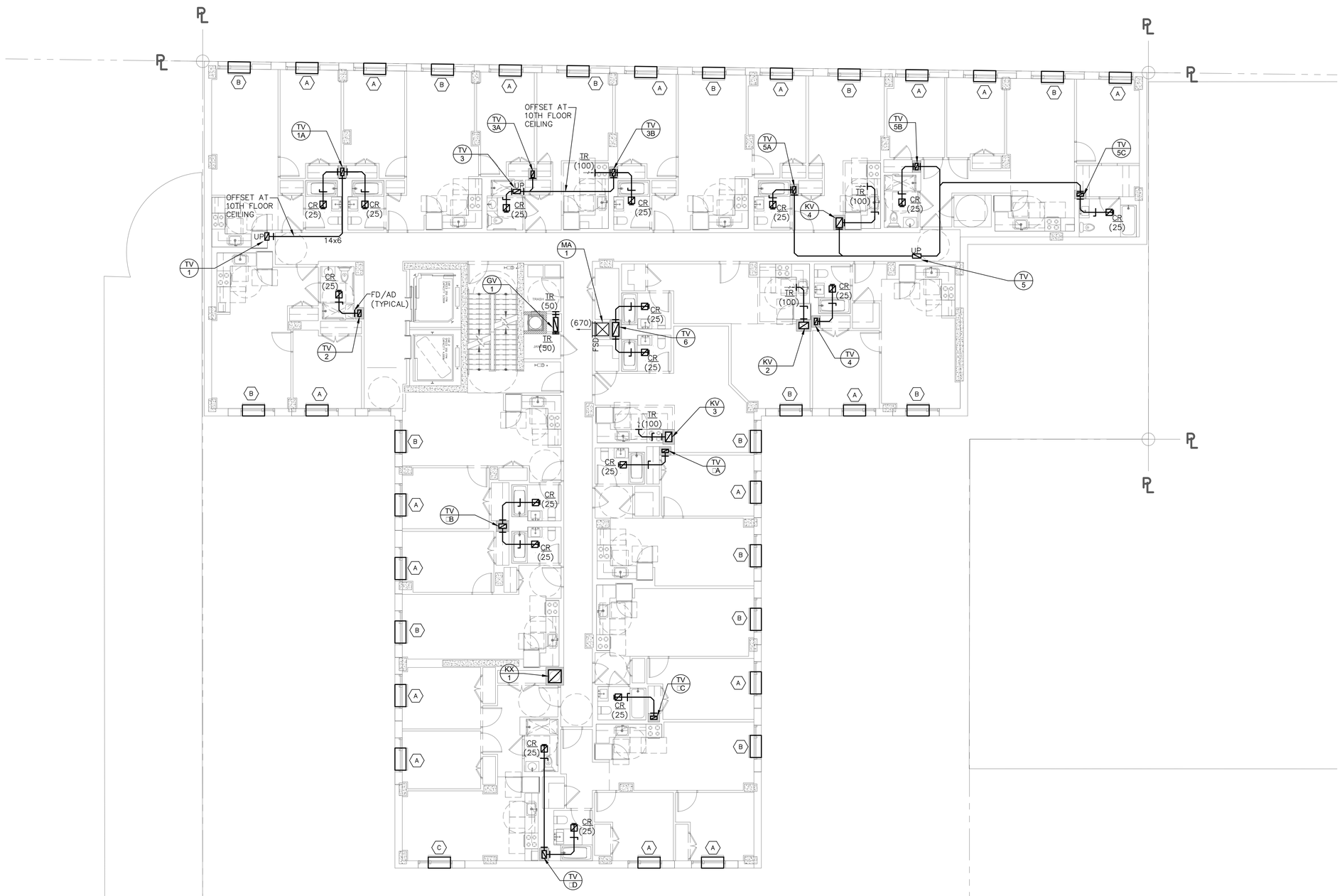

1 4TH - 10TH FLOOR PLAN

SCALE: 1/8"=1'-0"

BUILDING DEPARTMENT NOTE: "THIS PLAN IS APPROVED ONLY FOR WORK INDICATED ON THE APPLICATION SPECIFICATION SHEET. ALL OTHER MATTERS SHOWN ARE NOT TO BE RELIED UPON, OR TO BE CONSIDERED AS EITHER BEING APPROVED OR IN ACCORDANCE WITH APPLICABLE CODES".

ALTERATION OR RE-USE OF THIS DRAWING FOR OTHER THAN THIS PROJECT WITHOUT WRITTEN CONSENT OF THE ABOVE ENGINEER IS PROHIBITED BY LAW.

Client:

RANGER PROPERTIES
4790 BROADWAY
NEW YORK, NY 10034

Architect:

FOGARTY FINGER
architecture | interiors
69 Walker St, New York, NY 10013
t 212 966 7450 f 212 966 7444

Library Architect:

Andrew Berman Architect, PLLC
77 Chambers Street, 4th Floor
New York, NY 10007
Tel 212.22[illegible]5998

Structural:

Thornton Tomasetti
51 Madison Avenue
New York, NY 10010
Tel 917.[illegible]1.7800

MEP / FP:

Concessi Engineering, PC
499 7th Avenue, 11th Floor South Tower
New York, NY 10018
Tel 212.[illegible]29.[illegible]810

FACADE:

SIMPSON GUMPERTZ & HEGER
550 7th Avenue, 10th Floor
New York, NY 10018
Tel 212.271.7000

CODE:

METROPOLIS
22 Courtland Street, 10th Floor
New York, NY 10007
Tel 212.233.[illegible]344

No.	Date	Issue
4	02/06/19	ISSUED FOR FILING / DD ESTIMATING
3	01/29/19	ISSUED FOR PROGRESS
2	01/04/19	ISSUED FOR PROGRESS & COORDINATION
1	12/13/18	ISSUED FOR PROGRESS

Project:

4790 BROADWAY
NEW YORK, NY 10034

Drawing Title:

MECHANICAL 4TH-10TH FLOOR DUCTWORK PLAN

Seal & Signature:

STATE OF NEW YORK · ROBERT V. CONCESSI · No. 86705 · LICENSED PROFESSIONAL ENGINEER

DATE (MM-DD-YY):	11-02-2018
PROJECT No.:	7815.00
DRAWING BY:	SA
CHK BY:	RD/RC
DWG. No.:	M-205.00
CADD FILE No.:	–

06 OF 27

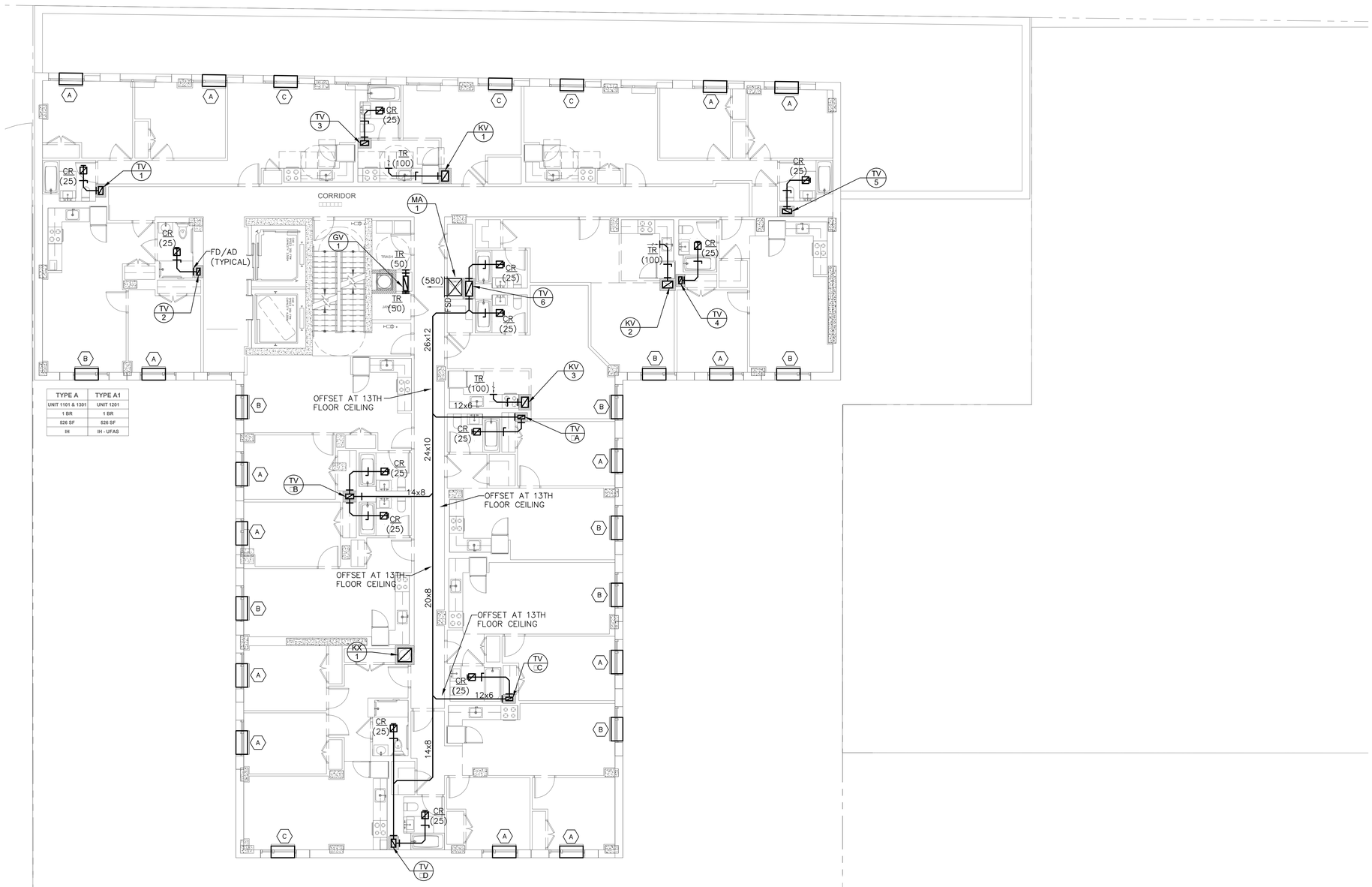

TYPE A	TYPE A1
UNIT 1101 & 1301	UNIT 1201
1 BR	1 BR
526 SF	526 SF
IH	IH - UFAS

1 11TH - 13TH FLOOR PLAN
SCALE: 1/8"=1'-0"

BUILDING DEPARTMENT NOTE: "THIS PLAN IS APPROVED ONLY FOR WORK INDICATED ON THE APPLICATION SPECIFICATION SHEET. ALL OTHER MATTERS SHOWN ARE NOT TO BE RELIED UPON, OR TO BE CONSIDERED AS EITHER BEING APPROVED OR IN ACCORDANCE WITH APPLICABLE CODES".

ALTERATION OR RE-USE OF THIS DRAWING FOR OTHER THAN THIS PROJECT WITHOUT WRITTEN CONSENT OF THE ABOVE ENGINEER IS PROHIBITED BY LAW.

Client:

RANGER PROPERTIES
4790 BROADWAY
NEW YORK, NY 10034

Architect:

FOGARTY FINGER
architecture | interiors
69 Walker St, New York, NY 10013
t 212 966 7450 f 212 966 7444

Library Architect:

Andrew Berman Architect, PLLC
77 Chambers Street, 4th Floor
New York, NY 10007
Tel 212.22[illegible].5998

Structural:

Thornton Tomasetti
51 Madison Avenue
New York, NY 10010
Tel 917.[illegible]1.7800

MEP / FP:

Concessi Engineering, PC
499 7th Avenue, 11th Floor South Tower
New York, NY 10018
Tel 212.[illegible]29.[illegible]810

FACADE:

SIMPSON GUMPERT[illegible]EGER
550 7th Avenue, 10th Floor
New York, NY 10018
Tel 212.271.7000

CODE:

METROPOLIS
22 Courtland Street, 10th Floor
New York, NY 10007
Tel 212.233.[illegible]344

No.	Date	Issue
4	02/06/19	ISSUED FOR FILING / DD ESTIMATING
3	01/29/19	ISSUED FOR PROGRESS
2	01/04/19	ISSUED FOR PROGRESS & COORDINATION
1	12/13/18	ISSUED FOR PROGRESS

Project:

4790 BROADWAY
NEW YORK, NY 10034

Drawing Title:

MECHANICAL
11TH-13TH FLOOR
DUCTWORK PLAN

Seal Signature:

STATE OF NEW YORK
ROBERT L. CONCESSI
No. 86705
LICENSED PROFESSIONAL ENGINEER

DATE (MM-DD-YY):	11-02-2018
PROJECT No.:	7815.00
DRAWING BY:	SA
CHK BY:	RD/RC
DWG. No.:	M-206.00
CADD FILE No.:	–

07 OF 27

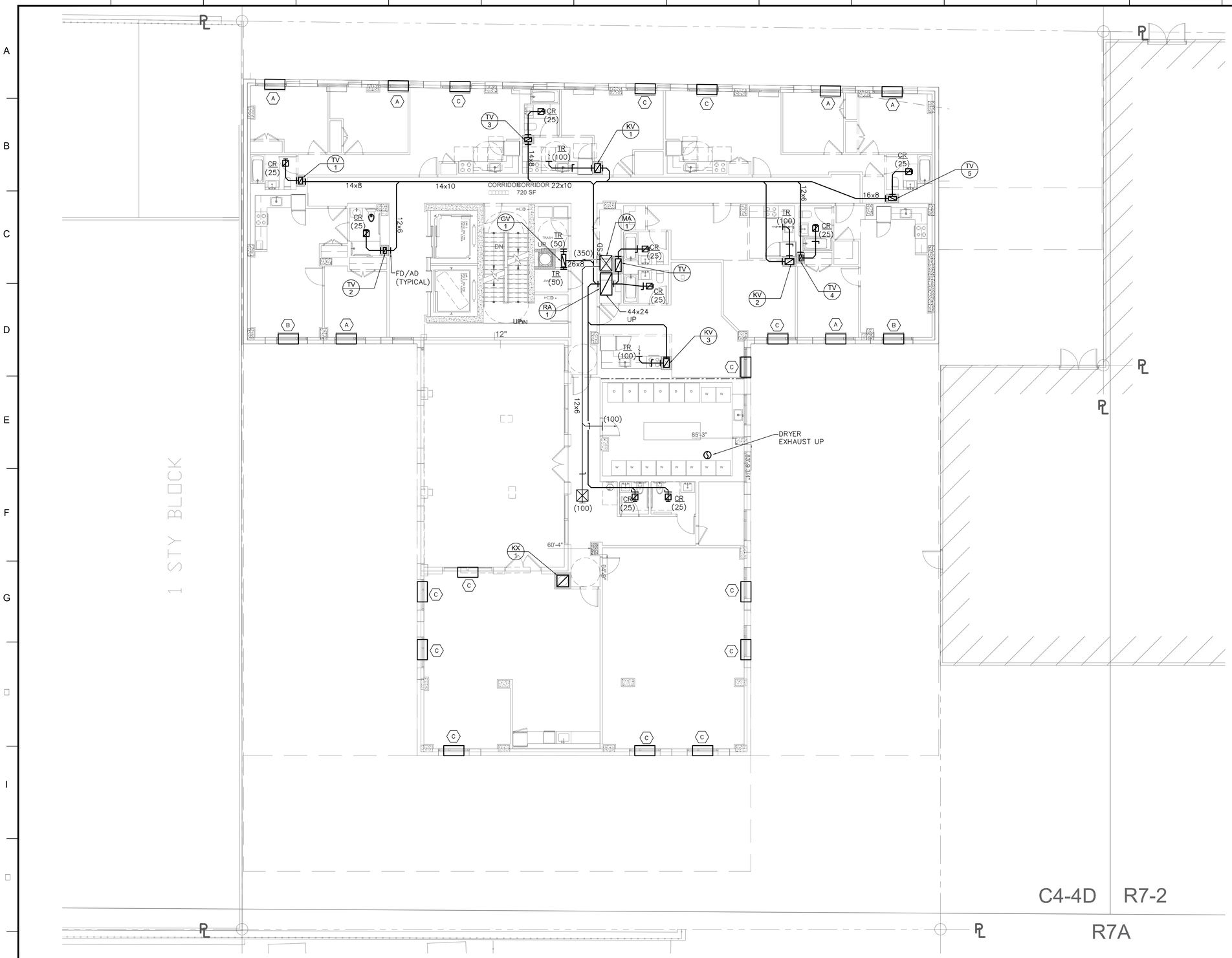

1 14TH FLOOR PLAN
SCALE: 1/8"=1'-0"

BUILDING DEPARTMENT NOTE: "THIS PLAN IS APPROVED ONLY FOR WORK INDICATED ON THE APPLICATION SPECIFICATION SHEET. ALL OTHER MATTERS SHOWN ARE NOT TO BE RELIED UPON, OR TO BE CONSIDERED AS EITHER BEING APPROVED OR IN ACCORDANCE WITH APPLICABLE CODES".

ALTERATION OR RE-USE OF THIS DRAWING FOR OTHER THAN THIS PROJECT WITHOUT WRITTEN CONSENT OF THE ABOVE ENGINEER IS PROHIBITED BY LAW.

Client:
RANGER PROPERTIES
4790 BROADWAY
NEW YORK, NY 10034

Architect:
FOGARTY FINGER architecture | interiors
69 Walker St, New York, NY 10013
t 212 966 7450 f 212 966 7444

Library Architect:
Andrew Berman Architect, PLLC
77 Chambers Street, 4th Floor
New York, NY 10007
Tel 212.22[illegible]5998

Structural:
Thornton Tomasetti
51 Madison Avenue
New York, NY 10010
Tel 917.[illegible]1.7800

MEP / FP:
Concessi Engineering, PC
499 7th Avenue, 11th Floor South Tower
New York, NY 10018
Tel 212.[illegible]29.[illegible]810

FACADE:
SIMPSON GUMPERTZ HEGER
550 7th Avenue, 10th Floor
New York, NY 10018
Tel 212.271.7000

CODE:
METROPOLIS
22 Courtland Street, 10th Floor
New York, NY 10007
Tel 212.233.[illegible]344

No.	Date	Issue
4	02/06/19	ISSUED FOR FILING / DD ESTIMATING
3	01/29/19	ISSUED FOR PROGRESS
2	01/04/19	ISSUED FOR PROGRESS & COORDINATION
1	12/13/18	ISSUED FOR PROGRESS

Project:
4790 BROADWAY
NEW YORK, NY 10034

Drawing Title:
MECHANICAL
14TH FLOOR
DUCTWORK PLAN

Seal & Signature:
STATE OF NEW YORK · ROBERT L. CONCESSI · No. 86705 · LICENSED PROFESSIONAL ENGINEER

DATE (MM-DD-YY):	11-02-2018
PROJECT No.:	7815.00
DRAWING BY:	SA
CHK BY:	RD/RC
DWG. No.:	M-207.00
CADD FILE No.:	08 OF 27

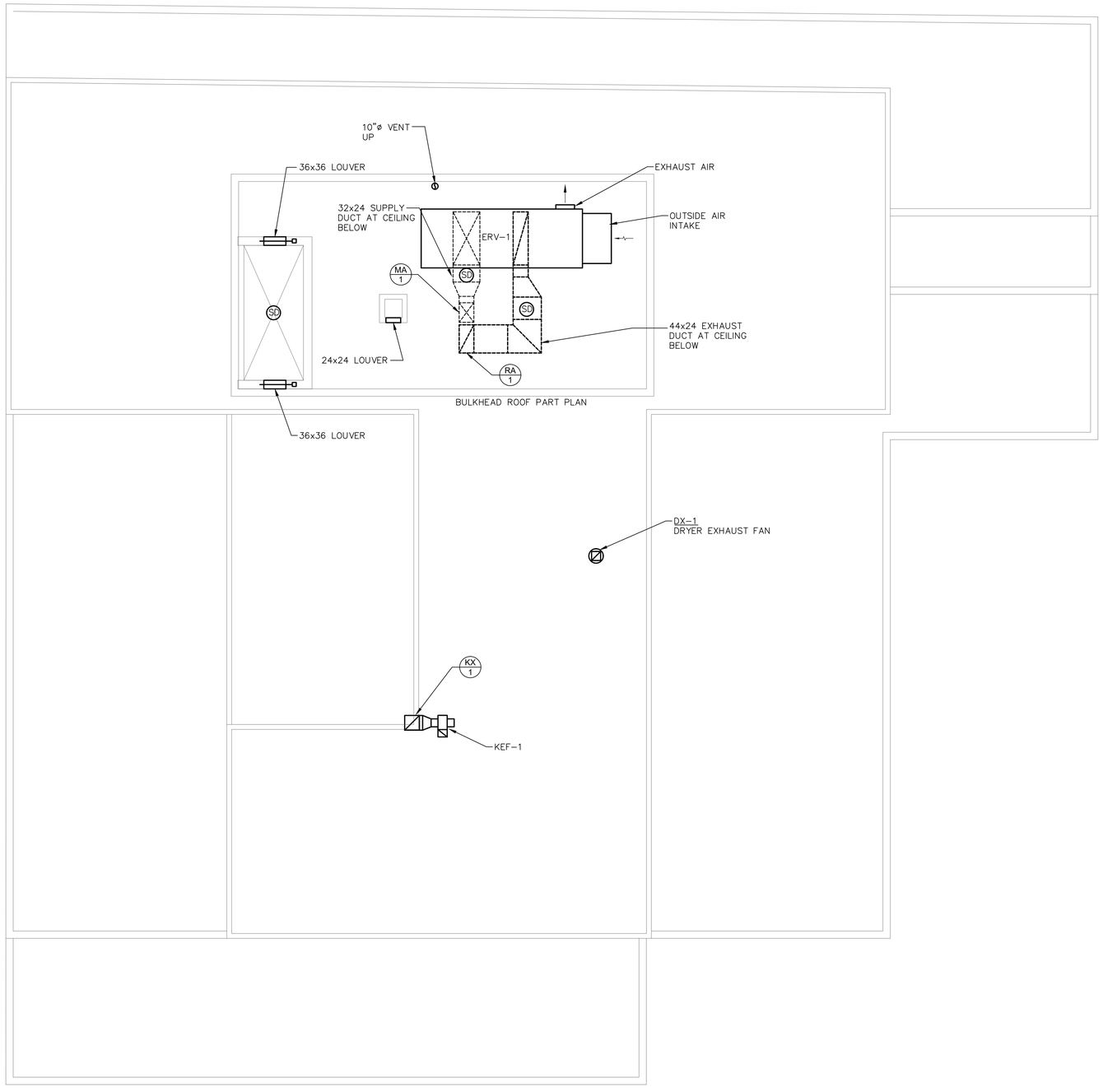

1 BULKHEAD ROOF PLAN

SCALE: 1/8"=1'-0"

BUILDING DEPARTMENT NOTE: "THIS PLAN IS APPROVED ONLY FOR WORK INDICATED ON THE APPLICATION SPECIFICATION SHEET. ALL OTHER MATTERS SHOWN ARE NOT TO BE RELIED UPON, OR TO BE CONSIDERED AS EITHER BEING APPROVED OR IN ACCORDANCE WITH APPLICABLE CODES".

ALTERATION OR RE-USE OF THIS DRAWING FOR OTHER THAN THIS PROJECT WITHOUT WRITTEN CONSENT OF THE ABOVE ENGINEER IS PROHIBITED BY LAW.

Client:

RANGER PROPERTIES
4790 BROADWAY
NEW YORK, NY 10034

Architect:

FOGARTY FINGER
architecture | interiors

69 Walker St, New York, NY 10013
t 212 966 7450 f 212 966 7444

Library Architect:

Andrew Berman Architect, PLLC
77 Chambers Street, 4th Floor
New York, NY 10007
Tel 212.22[illegible]5998

Structural:

Thornton Tomasetti
51 Madison Avenue
New York, NY 10010
Tel 917.[illegible]1.7800

MEP / FP:

Concessi Engineering, PC
499 7th Avenue, 11th Floor South Tower
New York, NY 10018
Tel 212.[illegible]29.[illegible]810

FACADE:

SIMPSON GUMPERTZ HEGER
550 7th Avenue, 10th Floor
New York, NY 10018
Tel 212.271.7000

CODE:

METROPOLIS
22 Courtland Street, 10th Floor
New York, NY 10007
Tel 212.233.[illegible]344

No.	Date	Issue
4	02/06/19	ISSUED FOR FILING / DD ESTIMATING
3	01/29/19	ISSUED FOR PROGRESS
2	01/04/19	ISSUED FOR PROGRESS & COORDINATION
1	12/13/18	ISSUED FOR PROGRESS

Project:

4790 BROADWAY
NEW YORK, NY 10034

Drawing Title:

MECHANICAL
BULKHEAD ROOF
DUCTWORK PLAN

Seal & Signature:

STATE OF NEW YORK
ROBERT J. CONCESSI
No. 86705
LICENSED PROFESSIONAL ENGINEER

DATE (MM-DD-YY):	11-02-2018
PROJECT No.:	7815.00
DRAWING BY:	SA
CHK BY:	RD/RC
DWG. No.:	M-208.00
CADD FILE No.:	09 OF 27

H:\ACAD\AUTOCAD\7815 Broadway Inwood\DESIGN\MECHANICAL\M-208 Bulkhead.dwg, 2/6/2019 1:37:14 PM

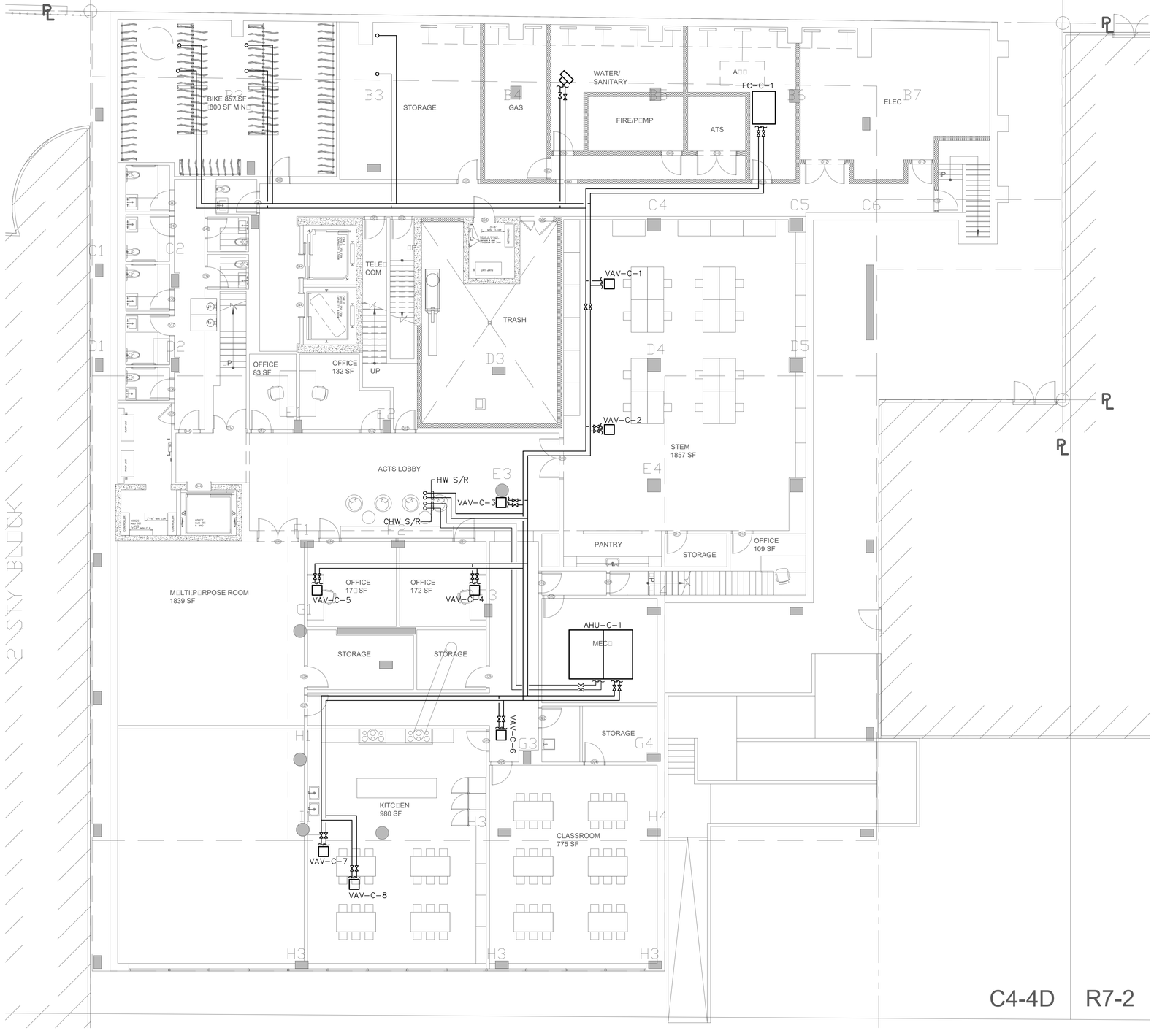

1 CELLAR FLOOR PLAN

SCALE: 1/8"=1'-0"

BUILDING DEPARTMENT NOTE: "THIS PLAN IS APPROVED ONLY FOR WORK INDICATED ON THE APPLICATION SPECIFICATION SHEET. ALL OTHER MATTERS SHOWN ARE NOT TO BE RELIED UPON, OR TO BE CONSIDERED AS EITHER BEING APPROVED OR IN ACCORDANCE WITH APPLICABLE CODES".

ALTERATION OR RE-USE OF THIS DRAWING FOR OTHER THAN THIS PROJECT WITHOUT WRITTEN CONSENT OF THE ABOVE ENGINEER IS PROHIBITED BY LAW.

Client:

RANGER PROPERTIES
4790 BROADWAY
NEW YORK, NY 10034

Architect:

FOGARTY FINGER
architecture | interiors

69 Walker St, New York, NY 10013
t 212 966 7450 f 212 966 7444

Library Architect:

Andrew Berman Architect, PLLC
77 Chambers Street, 4th Floor
New York, NY 10007
Tel 212.22[illegible]5998

Structural:

Thornton Tomasetti
51 Madison Avenue
New York, NY 10010
Tel 917.[illegible]1.7800

MEP / FP:

Concessi Engineering, PC
499 7th Avenue, 11th Floor South Tower
New York, NY 10018
Tel 212.[illegible]29.[illegible]810

FACADE:

SIMPSON GUMPERTZ HEGER
550 7th Avenue, 10th Floor
New York, NY 10018
Tel 212.271.7000

CODE:

METROPOLIS
22 Courtland Street, 10th Floor
New York, NY 10007
Tel 212.233.[illegible]344

No.	Date	Issue
3	02/06/19	ISSUED FOR FILING / DD ESTIMATING
2	01/29/19	ISSUED FOR PROGRESS
1	01/04/19	ISSUED FOR PROGRESS & COORDINATION

Project:

4790 BROADWAY
NEW YORK, NY 10034

Drawing Title:

MECHANICAL
CELLAR
PIPING PLAN

Seal & Signature:

STATE OF NEW YORK · ROBERT V. CONCESSI · No. 86705 · LICENSED PROFESSIONAL ENGINEER

DATE (MM-DD-YY):	11-02-2018
PROJECT No.:	7815.00
DRAWING BY:	SA
CHK BY:	RD/RC
DWG. No.:	M-301.00
CADD FILE No.:	10 OF 27

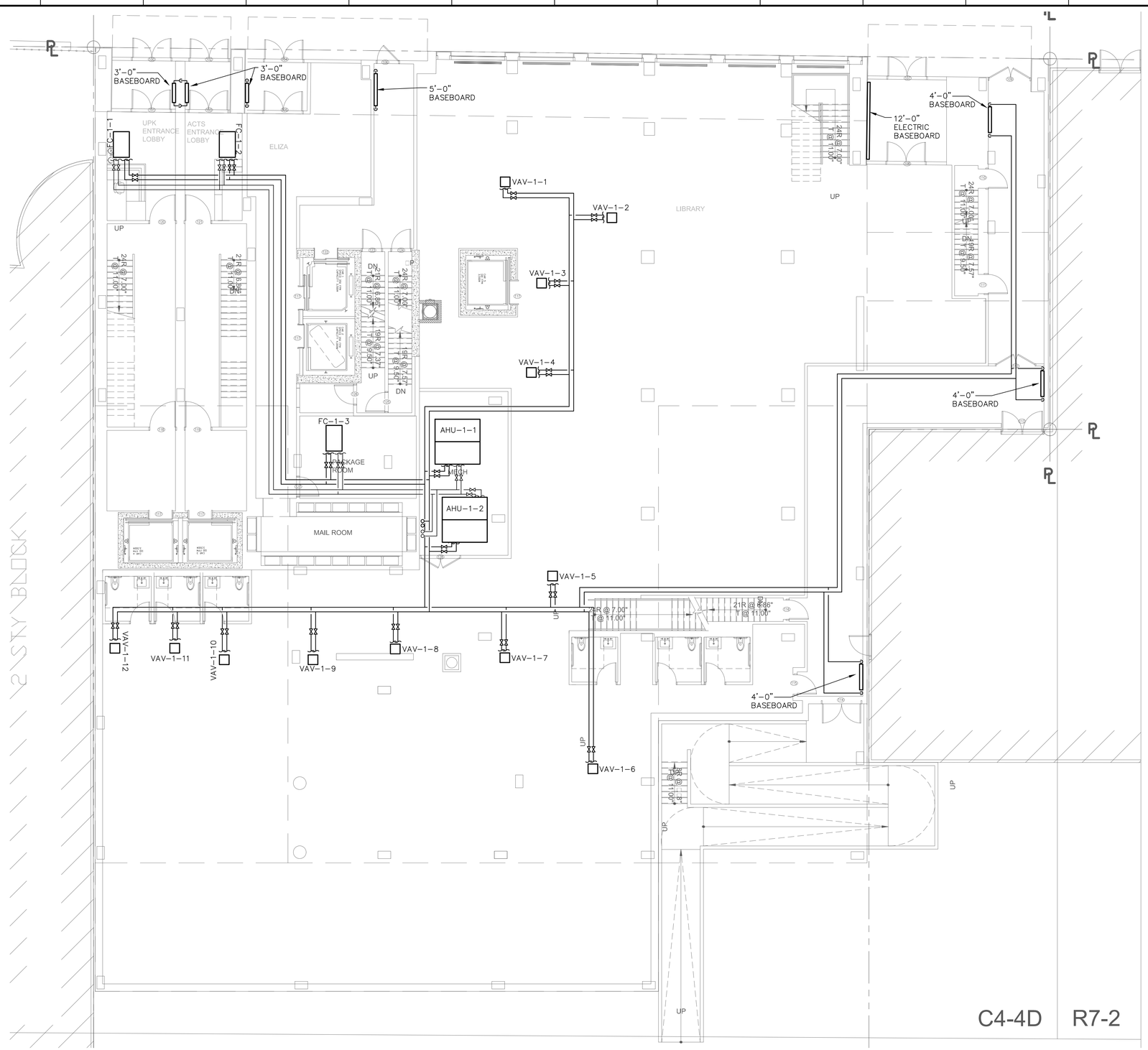

1 GROUND FLOOR PLAN

SCALE: 1/8"=1'-0"

BUILDING DEPARTMENT NOTE: "THIS PLAN IS APPROVED ONLY FOR WORK INDICATED ON THE APPLICATION SPECIFICATION SHEET. ALL OTHER MATTERS SHOWN ARE NOT TO BE RELIED UPON, OR TO BE CONSIDERED AS EITHER BEING APPROVED OR IN ACCORDANCE WITH APPLICABLE CODES".

ALTERATION OR RE-USE OF THIS DRAWING FOR OTHER THAN THIS PROJECT WITHOUT WRITTEN CONSENT OF THE ABOVE ENGINEER IS PROHIBITED BY LAW.

Client:

RANGER PROPERTIES
4790 BROADWAY
NEW YORK, NY 10034

Architect:

FOGARTY FINGER
architecture | interiors

69 Walker St, New York, NY 10013
t 212 966 7450 f 212 966 7444

Library Architect:

Andrew Berman Architect, PLLC
77 Chambers Street, 4th Floor
New York, NY 10007
Tel 212.22[illegible]5998

Structural:

Thornton Tomasetti
51 Madison Avenue
New York, NY 10010
Tel 917.[illegible]1.7800

MEP / FP:

Concessi Engineering, PC
499 7th Avenue, 11th Floor South Tower
New York, NY 10018
Tel 212.[illegible]29.[illegible]810

FACADE:

SIMPSON GUMPERTZ HEGER
550 7th Avenue, 10th Floor
New York, NY 10018
Tel 212.271.7000

CODE:

METROPOLIS
22 Courtland Street, 10th Floor
New York, NY 10007
Tel 212.233.[illegible]344

No.	Date	Issue
4	02/06/19	ISSUED FOR FILING / DD ESTIMATING
3	01/29/19	ISSUED FOR PROGRESS
2	01/04/19	ISSUED FOR PROGRESS & COORDINATION
1	12/13/18	ISSUED FOR PROGRESS

Project:

4790 BROADWAY
NEW YORK, NY 10034

Drawing Title:

MECHANICAL GROUND FLOOR PIPING PLAN

Seal & Signature:

STATE OF NEW YORK · ROBERT V. CONCESSI · No. 86705 · LICENSED PROFESSIONAL ENGINEER

DATE (MM-DD-YY):	11-02-2018
PROJECT No.:	7815.00
DRAWING BY:	SA
CHK BY:	RD/RC
DWG. No.:	M-302.00
CADD FILE No.:	

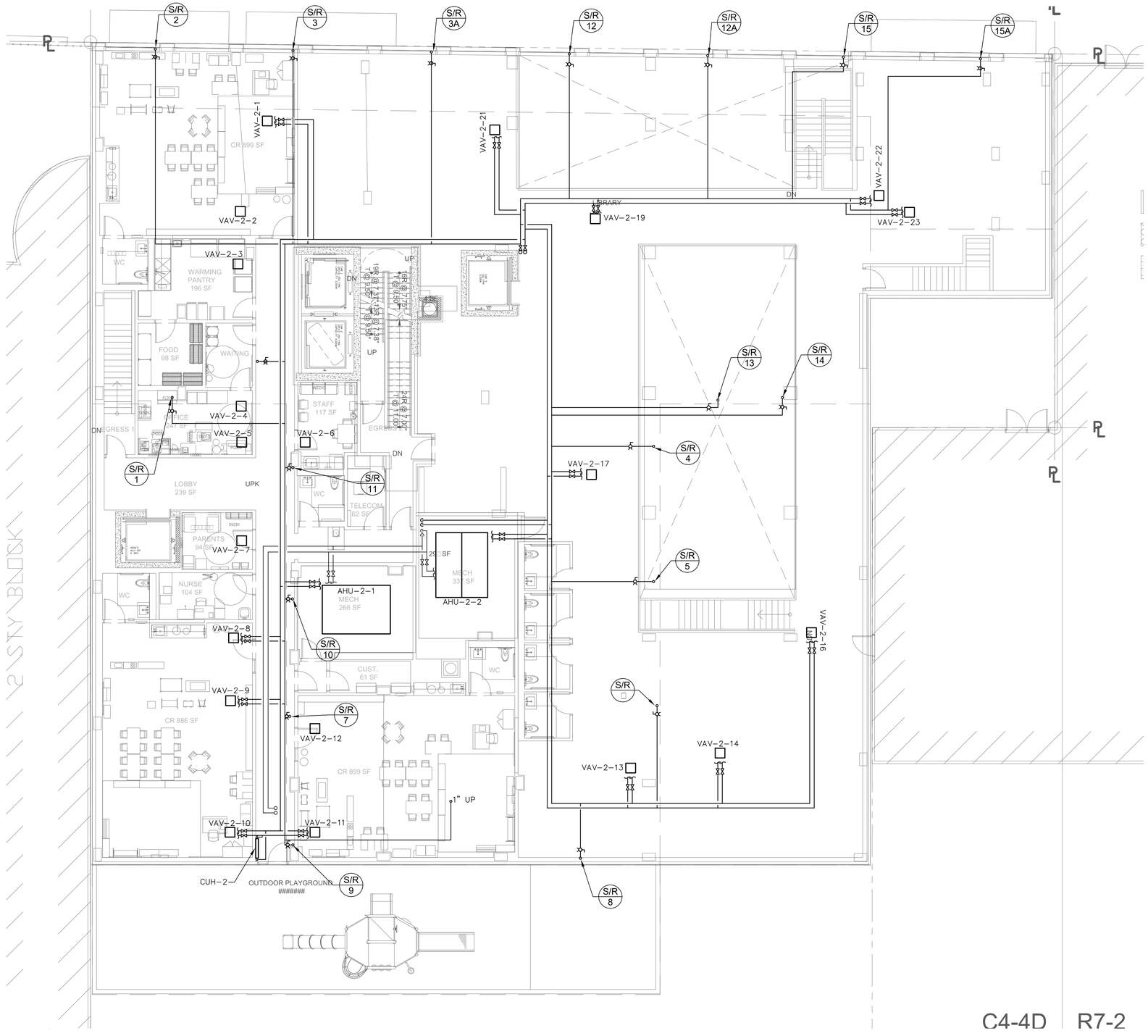

1 2ND FLOOR PLAN
SCALE: 1/8"=1'-0"

BUILDING DEPARTMENT NOTE: "THIS PLAN IS APPROVED ONLY FOR WORK INDICATED ON THE APPLICATION SPECIFICATION SHEET. ALL OTHER MATTERS SHOWN ARE NOT TO BE RELIED UPON, OR TO BE CONSIDERED AS EITHER BEING APPROVED OR IN ACCORDANCE WITH APPLICABLE CODES".

ALTERATION OR RE-USE OF THIS DRAWING FOR OTHER THAN THIS PROJECT WITHOUT WRITTEN CONSENT OF THE ABOVE ENGINEER IS PROHIBITED BY LAW.

Client:

RANGER PROPERTIES
4790 BROADWAY
NEW YORK, NY 10034

Architect:

FOGARTY FINGER
architecture | interiors

69 Walker St, New York, NY 10013
t 212 966 7450 f 212 966 7444

Library Architect:

Andrew Berman Architect, PLLC
77 Chambers Street, 4th Floor
New York, NY 10007
Tel 212.22[illegible]5998

Structural:

Thornton Tomasetti
51 Madison Avenue
New York, NY 10010
Tel 917.[illegible]1.7800

MEP / FP:

Concessi Engineering, PC
499 7th Avenue, 11th Floor South Tower
New York, NY 10018
Tel 212.[illegible]29.[illegible]810

FACADE:

SIMPSON GUMPERTZ HEGER
550 7th Avenue, 10th Floor
New York, NY 10018
Tel 212.271.7000

CODE:

METROPOLIS
22 Courtland Street, 10th Floor
New York, NY 10007
Tel 212.233.[illegible]344

No.	Date	Issue
4	02/06/19	ISSUED FOR FILING / DD ESTIMATING
3	01/29/19	ISSUED FOR PROGRESS
2	01/04/19	ISSUED FOR PROGRESS & COORDINATION
1	12/13/18	ISSUED FOR PROGRESS

Project:

4790 BROADWAY
NEW YORK, NY 10034

Drawing Title:

MECHANICAL 2ND FLOOR PIPING PLAN

Seal & Signature:

STATE OF NEW YORK · ROBERT J. CONCESSI · No. 86705 · LICENSED PROFESSIONAL ENGINEER

DATE (MM-DD-YY):	11-02-2018
PROJECT No.:	7815.00
DRAWING BY:	SA
CHK BY:	RD/RC
DWG. No.:	M-303.00
CADD FILE No.:	12 OF 27

H:\ACAD\AUTOCAD\4790 Broadway, Inwood\DESIGN\MECHANICAL\M-303 (2nd Flr Piping).dwg, 2/6/2019 3:37:37 PM

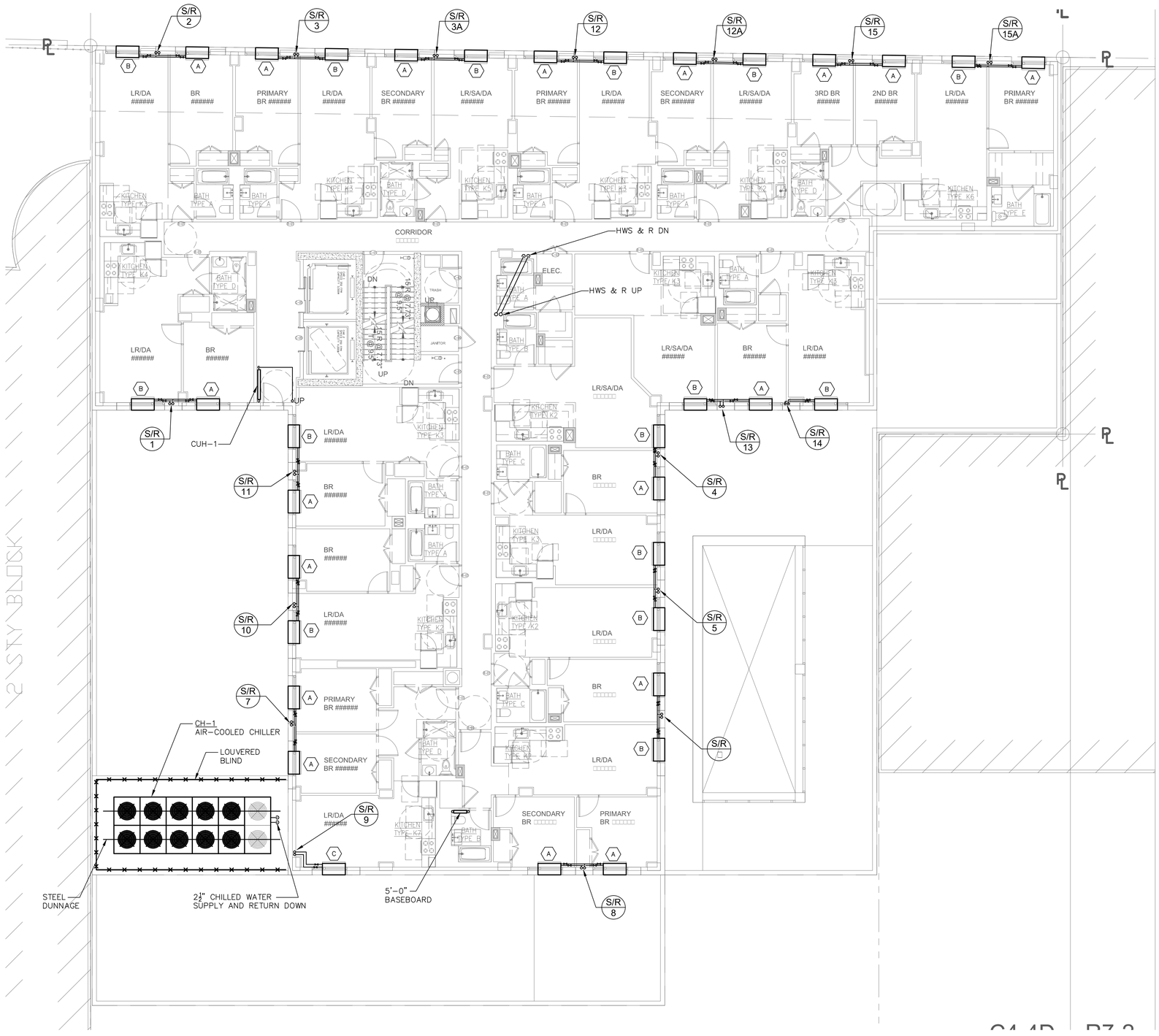

1 3RD FLOOR PLAN

SCALE: 1/8"=1'-0"

BUILDING DEPARTMENT NOTE: "THIS PLAN IS APPROVED ONLY FOR WORK INDICATED ON THE APPLICATION SPECIFICATION SHEET. ALL OTHER MATTERS SHOWN ARE NOT TO BE RELIED UPON, OR TO BE CONSIDERED AS EITHER BEING APPROVED OR IN ACCORDANCE WITH APPLICABLE CODES".

ALTERATION OR RE-USE OF THIS DRAWING FOR OTHER THAN THIS PROJECT WITHOUT WRITTEN CONSENT OF THE ABOVE ENGINEER IS PROHIBITED BY LAW.

Client:

RANGER PROPERTIES
4790 BROADWAY
NEW YORK, NY 10034

Architect:

FOGARTY FINGER
architecture | interiors

69 Walker St, New York, NY 10013
t 212 966 7450 f 212 966 7444

Library Architect:

Andrew Berman Architect, PLLC
77 Chambers Street, 4th Floor
New York, NY 10007
Tel 212.22[illegible]5998

Structural:

Thornton Tomasetti
51 Madison Avenue
New York, NY 10010
Tel 917.[illegible]1.7800

MEP / FP:

Concessi Engineering, PC
499 7th Avenue, 11th Floor South Tower
New York, NY 10018
Tel 212.[illegible]29.[illegible]810

FACADE:

SIMPSON GUMPERTZ [illegible] HEGER
550 7th Avenue, 10th Floor
New York, NY 10018
Tel 212.271.7000

CODE:

METROPOLIS
22 Courtland Street, 10th Floor
New York, NY 10007
Tel 212.233.[illegible]344

No.	Date	Issue
3	02/06/19	ISSUED FOR FILING / DD ESTIMATING
2	01/29/19	ISSUED FOR PROGRESS
1	01/04/19	ISSUED FOR PROGRESS & COORDINATION

Project:

4790 BROADWAY
NEW YORK, NY 10034

Drawing Title:

MECHANICAL 3RD FLOOR PIPING PLAN

Seal & Signature:

STATE OF NEW YORK · ROBERT L. CONCESSI · LICENSED PROFESSIONAL ENGINEER · No. 86705

DATE (MM-DD-YY):	11-02-2018
PROJECT No.:	7815.00
DRAWING BY:	SA
CHK BY:	RD/RC
DWG. No.:	M-304.00
CADD FILE No.:	13 OF 27

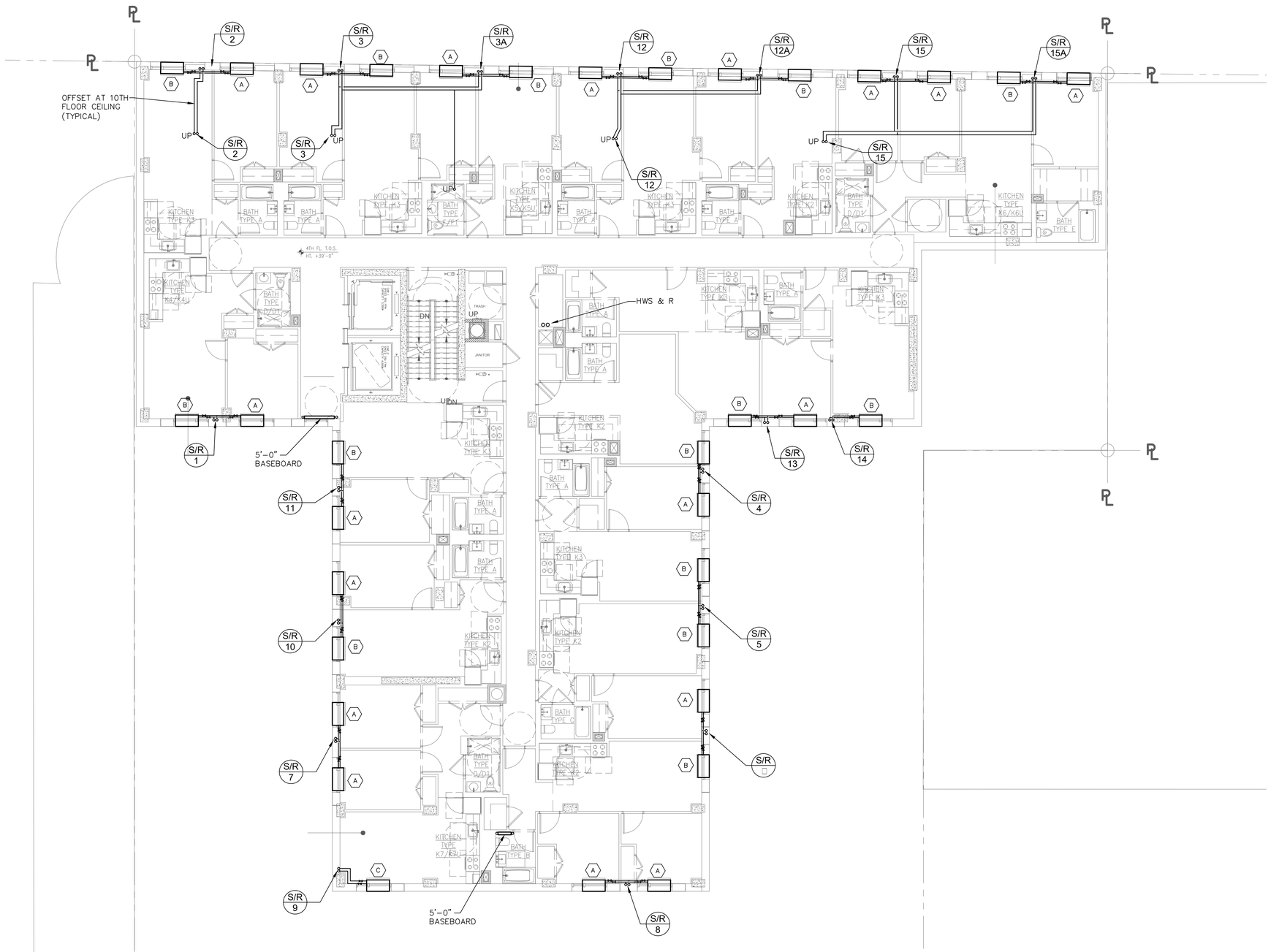

1 4TH-10TH FLOOR PLAN

SCALE: 1/8"=1'-0"

BUILDING DEPARTMENT NOTE: "THIS PLAN IS APPROVED ONLY FOR WORK INDICATED ON THE APPLICATION SPECIFICATION SHEET. ALL OTHER MATTERS SHOWN ARE NOT TO BE RELIED UPON, OR TO BE CONSIDERED AS EITHER BEING APPROVED OR IN ACCORDANCE WITH APPLICABLE CODES".

ALTERATION OR RE-USE OF THIS DRAWING FOR OTHER THAN THIS PROJECT WITHOUT WRITTEN CONSENT OF THE ABOVE ENGINEER IS PROHIBITED BY LAW.

Client:

RANGER PROPERTIES
4790 BROADWAY
NEW YORK, NY 10034

Architect:

FOGARTY FINGER
architecture | interiors

69 Walker St, New York, NY 10013
t 212 966 7450 f 212 966 7444

Library Architect:

Andrew Berman Architect, PLLC
77 Chambers Street, 4th Floor
New York, NY 10007
Tel 212.22[illegible]5998

Structural:

Thornton Tomasetti
51 Madison Avenue
New York, NY 10010
Tel 917.[illegible]1.7800

MEP / FP:

Concessi Engineering, PC
499 7th Avenue, 11th Floor South Tower
New York, NY 10018
Tel 212.[illegible]29.[illegible]810

FACADE:

SIMPSON GUMPERTZ HEGER
550 7th Avenue, 10th Floor
New York, NY 10018
Tel 212.271.7000

CODE:

METROPOLIS
22 Courtland Street, 10th Floor
New York, NY 10007
Tel 212.233.[illegible]344

No.	Date	Issue
4	02/06/19	ISSUED FOR FILING / DD ESTIMATING
3	01/29/19	ISSUED FOR PROGRESS
2	01/04/19	ISSUED FOR PROGRESS & COORDINATION
1	12/13/18	ISSUED FOR PROGRESS

Project:

4790 BROADWAY
NEW YORK, NY 10034

Drawing Title:

MECHANICAL 4TH–10TH FLOOR PIPING PLAN

Seal & Signature:

STATE OF NEW YORK · ROBERT V. CONCESSI · No. 86705 · LICENSED PROFESSIONAL ENGINEER

DATE (MM–DD–YY):	11–02–2018
PROJECT No.:	7815.00
DRAWING BY:	SA
CHK BY:	RD/RC
DWG. No.:	M–305.00
CADD FILE No.:	14 OF 27

W:\ACAD\AUTOCAD\4790 Broadway, Inwood\DESIGN\MECHANICAL\M-305 (4th-10th Fl) Piping.dwg 2/4/2019 3:37:22 PM

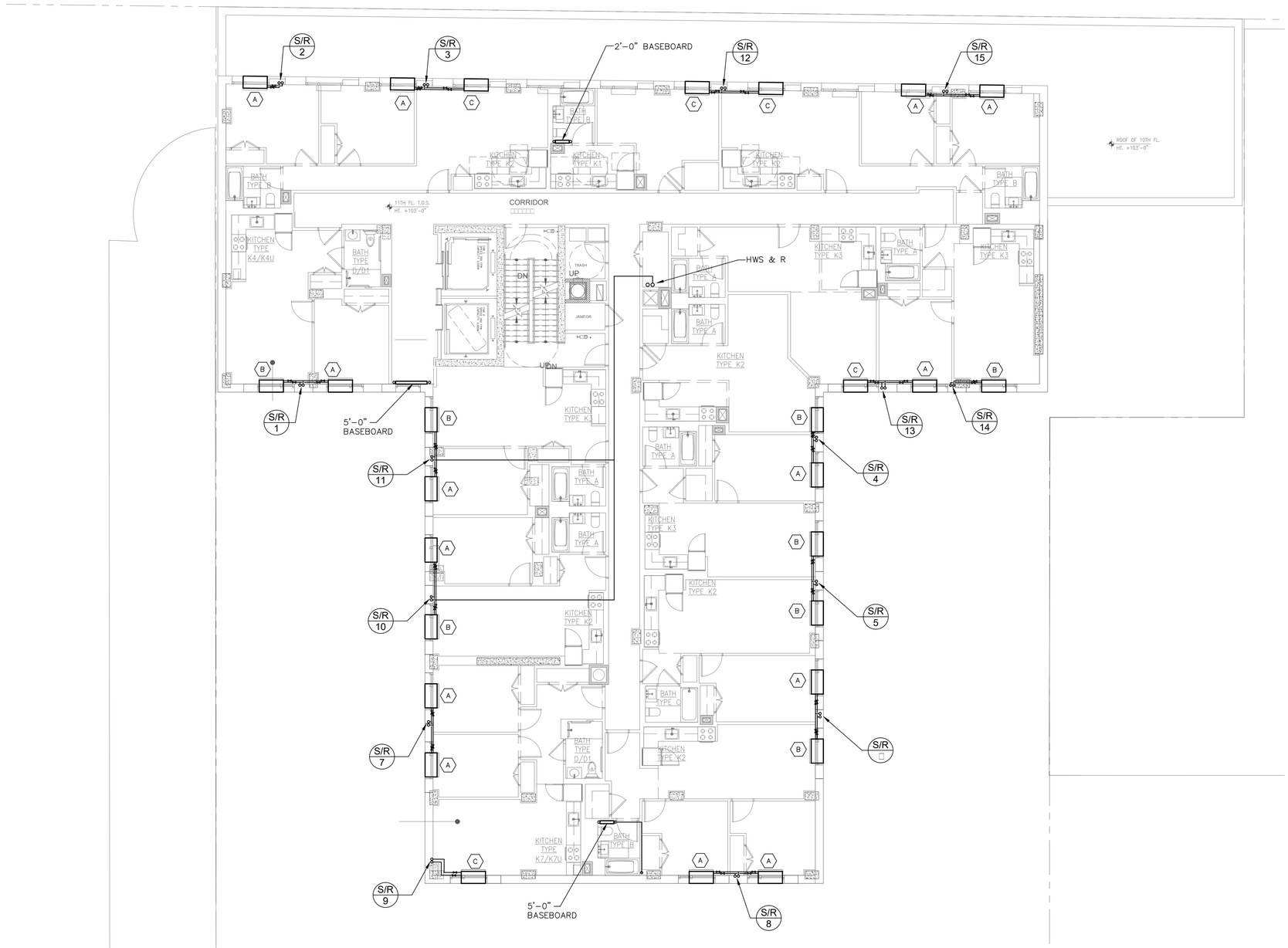

1 11TH-13TH FLOOR PLAN

SCALE: 1/8"=1'-0"

BUILDING DEPARTMENT NOTE: "THIS PLAN IS APPROVED ONLY FOR WORK INDICATED ON THE APPLICATION SPECIFICATION SHEET. ALL OTHER MATTERS SHOWN ARE NOT TO BE RELIED UPON, OR TO BE CONSIDERED AS EITHER BEING APPROVED OR IN ACCORDANCE WITH APPLICABLE CODES".

ALTERATION OR RE-USE OF THIS DRAWING FOR OTHER THAN THIS PROJECT WITHOUT WRITTEN CONSENT OF THE ABOVE ENGINEER IS PROHIBITED BY LAW.

Client:

RANGER PROPERTIES
4790 BROADWAY
NEW YORK, NY 10034

Architect:

FOGARTY FINGER
architecture | interiors

69 Walker St, New York, NY 10013
t 212 966 7450 f 212 966 7444

Library Architect:

Andrew Berman Architect, PLLC
77 Chambers Street, 4th Floor
New York, NY 10007
Tel 212.22[illegible]5998

Structural:

Thornton Tomasetti
51 Madison Avenue
New York, NY 10010
Tel 917.[illegible]1.7800

MEP / FP:

Concessi Engineering, PC
499 7th Avenue, 11th Floor South Tower
New York, NY 10018
Tel 212.[illegible]29.[illegible]810

FACADE:

SIMPSON GUMPERTZ HEGER
550 7th Avenue, 10th Floor
New York, NY 10018
Tel 212.271.7000

CODE:

METROPOLIS
22 Courtland Street, 10th Floor
New York, NY 10007
Tel 212.233.[illegible]344

No.	Date	Issue
4	02/06/19	ISSUED FOR FILING / DD ESTIMATING
3	01/29/19	ISSUED FOR PROGRESS
2	01/04/19	ISSUED FOR PROGRESS & COORDINATION
1	12/13/18	ISSUED FOR PROGRESS

Project:

4790 BROADWAY
NEW YORK, NY 10034

Drawing Title:

MECHANICAL
11TH-13TH FLOOR
PIPING PLAN

Seal & Signature:

STATE OF NEW YORK · ROBERT L. CONCESSI · No. 86705 · LICENSED PROFESSIONAL ENGINEER

DATE (MM-DD-YY):	11-02-2018
PROJECT No.:	7815.00
DRAWING BY:	SA
CHK BY:	RD/RC
DWG. No.:	M-306.00
CADD FILE No.:	15 OF 27

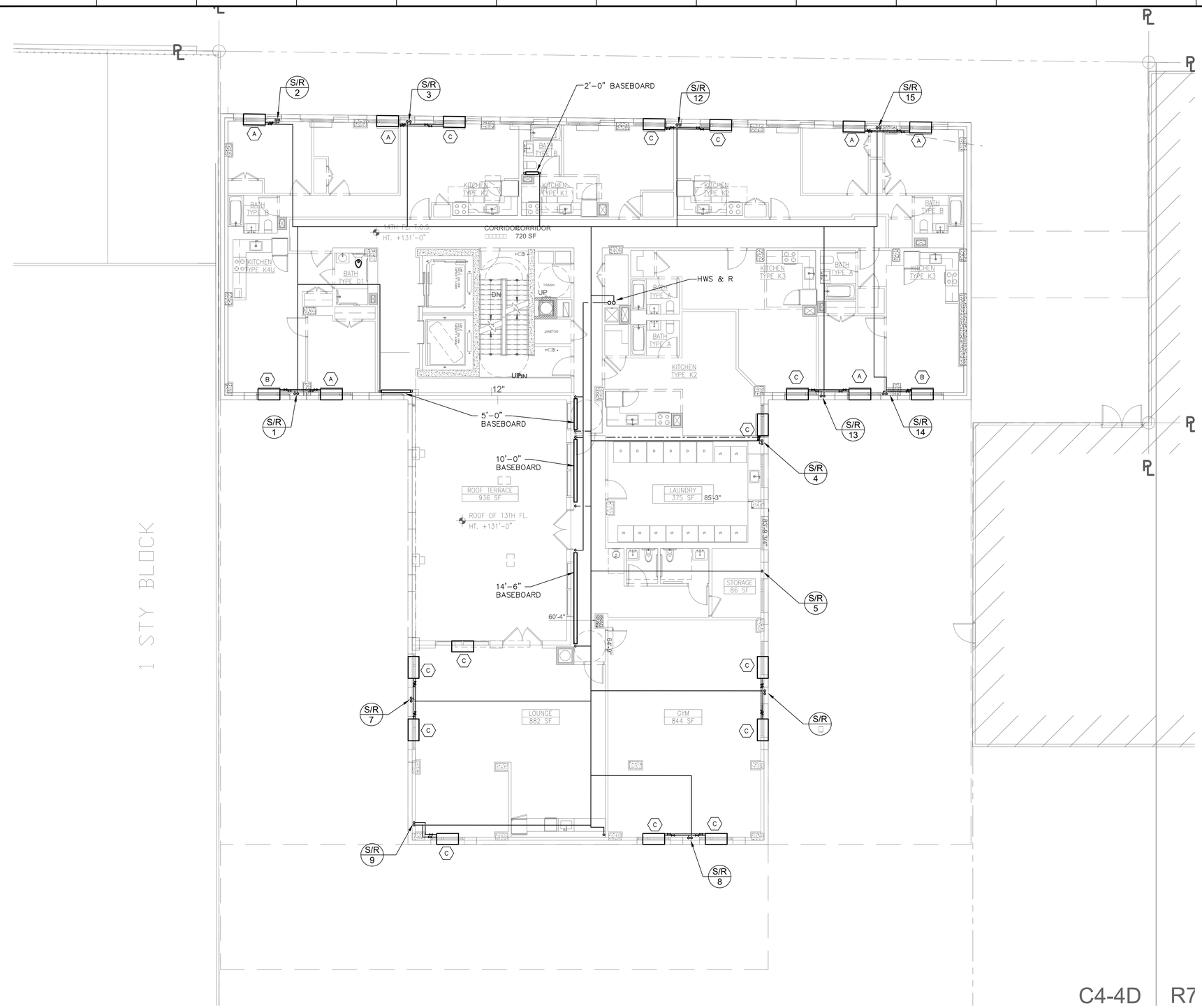

1 14TH FLOOR PLAN
SCALE: 1/8"=1'-0"

BUILDING DEPARTMENT NOTE: "THIS PLAN IS APPROVED ONLY FOR WORK INDICATED ON THE APPLICATION SPECIFICATION SHEET. ALL OTHER MATTERS SHOWN ARE NOT TO BE RELIED UPON, OR TO BE CONSIDERED AS EITHER BEING APPROVED OR IN ACCORDANCE WITH APPLICABLE CODES".

ALTERATION OR RE-USE OF THIS DRAWING FOR OTHER THAN THIS PROJECT WITHOUT WRITTEN CONSENT OF THE ABOVE ENGINEER IS PROHIBITED BY LAW.

Client:

RANGER PROPERTIES
4790 BROADWAY
NEW YORK, NY 10034

Architect:

FOGARTY FINGER
architecture | interiors

69 Walker St, New York, NY 10013
t 212 966 7450 f 212 966 7444

Library Architect:

Andrew Berman Architect, PLLC
77 Chambers Street, 4th Floor
New York, NY 10007
Tel 212.22[illegible]5998

Structural:

Thornton Tomasetti
51 Madison Avenue
New York, NY 10010
Tel 917.[illegible]1.7800

MEP / FP:

Concessi Engineering, PC
499 7th Avenue, 11th Floor South Tower
New York, NY 10018
Tel 212.[illegible]29.[illegible]810

FACADE:

SIMPSON GUMPERTZ HEGER
550 7th Avenue, 10th Floor
New York, NY 10018
Tel 212.271.7000

CODE:

METROPOLIS
22 Courtland Street, 10th Floor
New York, NY 10007
Tel 212.233.[illegible]344

No.	Date	Issue
4	02/06/19	ISSUED FOR FILING / DD ESTIMATING
3	01/29/19	ISSUED FOR PROGRESS
2	01/04/19	ISSUED FOR PROGRESS & COORDINATION
1	12/13/18	ISSUED FOR PROGRESS

Project:

4790 BROADWAY
NEW YORK, NY 10034

Drawing Title:

MECHANICAL
14TH FLOOR
PIPING PLAN

Seal / Signature:

STATE OF NEW YORK
ROBERT J. CONCESSI
No. 86705
LICENSED PROFESSIONAL ENGINEER

DATE (MM-DD-YY):	11-02-2018
PROJECT No.:	7815.00
DRAWING BY:	SA
CHK BY:	RD/RC
DWG. No.:	M-307.00
CADD FILE No.:	16 OF 27

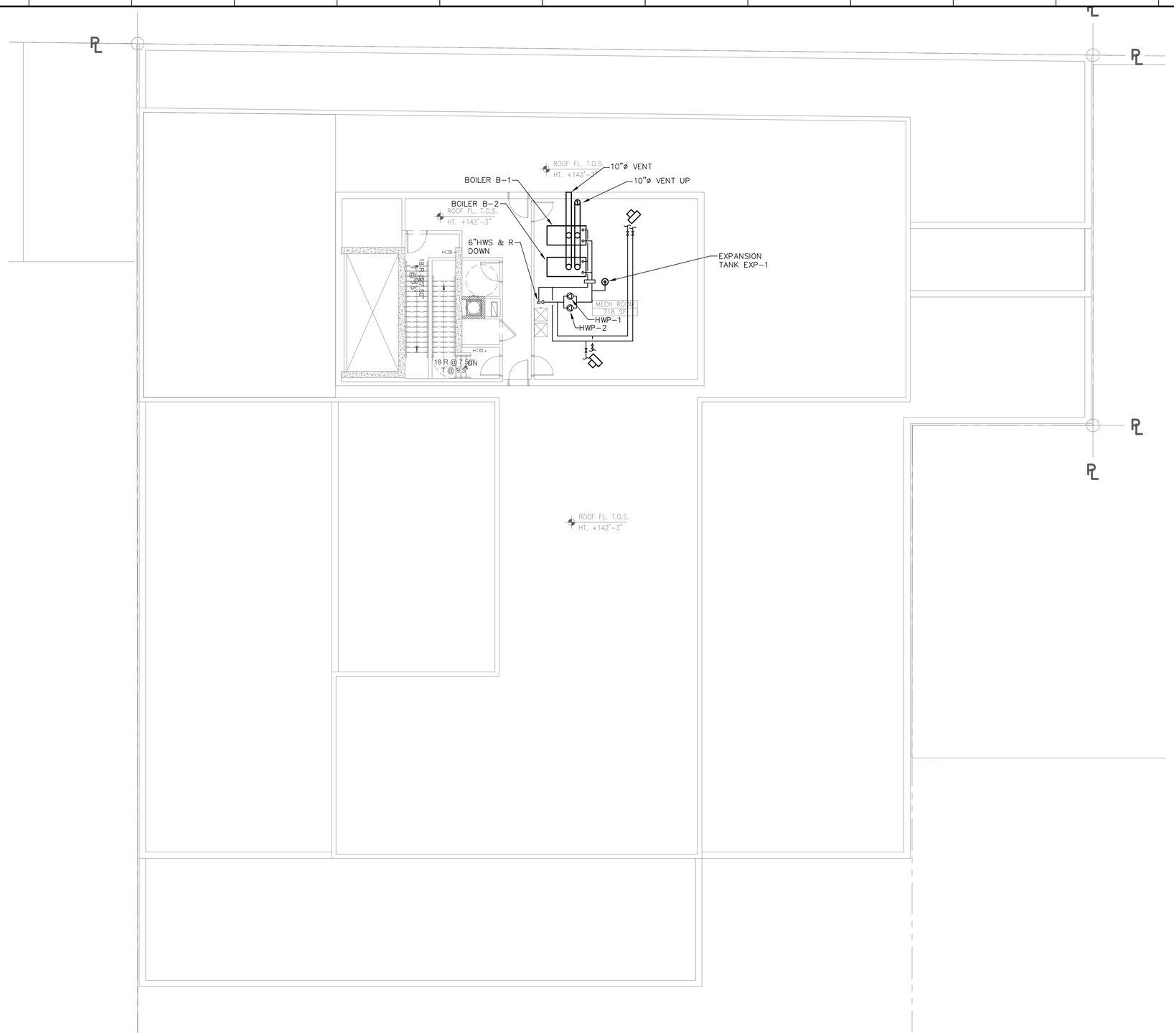

1 BULKHEAD PLAN
SCALE: 1/8"=1'-0"

BUILDING DEPARTMENT NOTE: "THIS PLAN IS APPROVED ONLY FOR WORK INDICATED ON THE APPLICATION SPECIFICATION SHEET. ALL OTHER MATTERS SHOWN ARE NOT TO BE RELIED UPON, OR TO BE CONSIDERED AS EITHER BEING APPROVED OR IN ACCORDANCE WITH APPLICABLE CODES".

ALTERATION OR RE-USE OF THIS DRAWING FOR OTHER THAN THIS PROJECT WITHOUT WRITTEN CONSENT OF THE ABOVE ENGINEER IS PROHIBITED BY LAW.

Client:
RANGER PROPERTIES
4790 BROADWAY
NEW YORK, NY 10034

Architect:
FOGARTY FINGER
architecture | interiors
69 Walker St, New York, NY 10013
t 212 966 7450 f 212 966 7444

Library Architect:
Andrew Berman Architect, PLLC
77 Chambers Street, 4th Floor
New York, NY 10007
Tel 212.222.5998

Structural:
Thornton Tomasetti
51 Madison Avenue
New York, NY 10010
Tel 917.[illegible]1.7800

MEP / FP:
Concessi Engineering, PC
499 7th Avenue, 11th Floor South Tower
New York, NY 10018
Tel 212.[illegible]29.[illegible]810

FACADE:
SIMPSON GUMPERT[illegible]EGER
550 7th Avenue, 10th Floor
New York, NY 10018
Tel 212.271.7000

CODE:
METROPOLIS
22 Courtland Street, 10th Floor
New York, NY 10007
Tel 212.233.[illegible]344

No.	Date	Issue
4	02/06/19	ISSUED FOR FILING / DD ESTIMATING
3	01/28/19	ISSUED FOR PROGRESS
2	01/04/19	ISSUED FOR PROGRESS & COORDINATION
1	12/13/18	ISSUED FOR PROGRESS

Project:
4790 BROADWAY
NEW YORK, NY 10034

Drawing Title:
MECHANICAL
BULKHEAD
PIPING PLAN

Seal Signature:
STATE OF NEW YORK
ROBERT L. CONCESSI
No. 86705
LICENSED PROFESSIONAL ENGINEER

DATE (MM-DD-YY):	11-02-2018
PROJECT No.:	7815.00
DRAWING BY:	SA
CHK BY:	RD/RC
DWG. No.:	M-308.00
CADD FILE No.:	17 OF 27

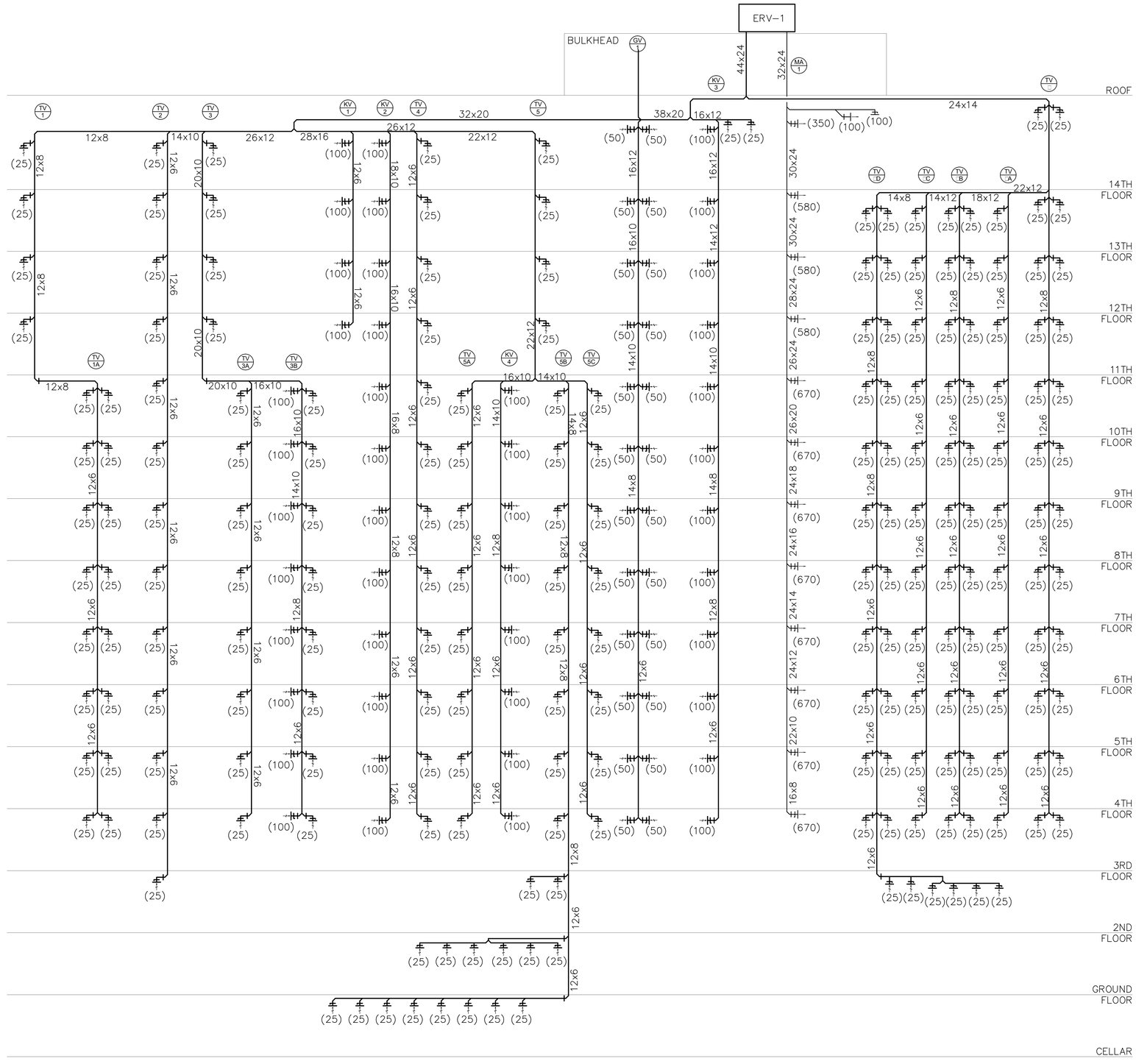

MECHANICAL AIR RISER DIAGRAM
N.T.S.

BUILDING DEPARTMENT NOTE: "THIS PLAN IS APPROVED ONLY FOR WORK INDICATED ON THE APPLICATION SPECIFICATION SHEET. ALL OTHER MATTERS SHOWN ARE NOT TO BE RELIED UPON, OR TO BE CONSIDERED AS EITHER BEING APPROVED OR IN ACCORDANCE WITH APPLICABLE CODES".

ALTERATION OR RE-USE OF THIS DRAWING FOR OTHER THAN THIS PROJECT WITHOUT WRITTEN CONSENT OF THE ABOVE ENGINEER IS PROHIBITED BY LAW.

Client:

RANGER PROPERTIES
4790 BROADWAY
NEW YORK, NY 10034

Architect:

FOGARTY FINGER
architecture | interiors

69 Walker St, New York, NY 10013
t 212 966 7450 f 212 966 7444

Library Architect:

Andrew Berman Architect, PLLC
77 Chambers Street, 4th Floor
New York, NY 10007
Tel 212.22[illegible]5998

Structural:

Thornton Tomasetti
51 Madison Avenue
New York, NY 10010
Tel 917.[illegible]1.7800

MEP / FP:

Concessi Engineering, PC
499 7th Avenue, 11th Floor South Tower
New York, NY 10018
Tel 212.[illegible]29.[illegible]810

FACADE:

SIMPSON GUMPERTZ HEGER
550 7th Avenue, 10th Floor
New York, NY 10018
Tel 212.271.7000

CODE:

METROPOLIS
22 Courtland Street, 10th Floor
New York, NY 10007
Tel 212.233.[illegible]344

No.	Date	Issue
3	02/06/19	ISSUED FOR FILING / DD ESTIMATING
2	01/29/19	ISSUED FOR PROGRESS
1	01/04/19	ISSUED FOR PROGRESS & COORDINATION

Project:

4790 BROADWAY
NEW YORK, NY 10034

Drawing Title:

MECHANICAL AIR RISER DIAGRAM

Seal & Signature:

STATE OF NEW YORK · ROBERT V. CONCESSI · No. 86705 · LICENSED PROFESSIONAL ENGINEER

DATE (MM-DD-YY):	11-02-2018
PROJECT No.:	7815.00
DRAWING BY:	SA
CHK BY:	RD/RC
DWG. No.:	M-401.00
CADD FILE No.:	—

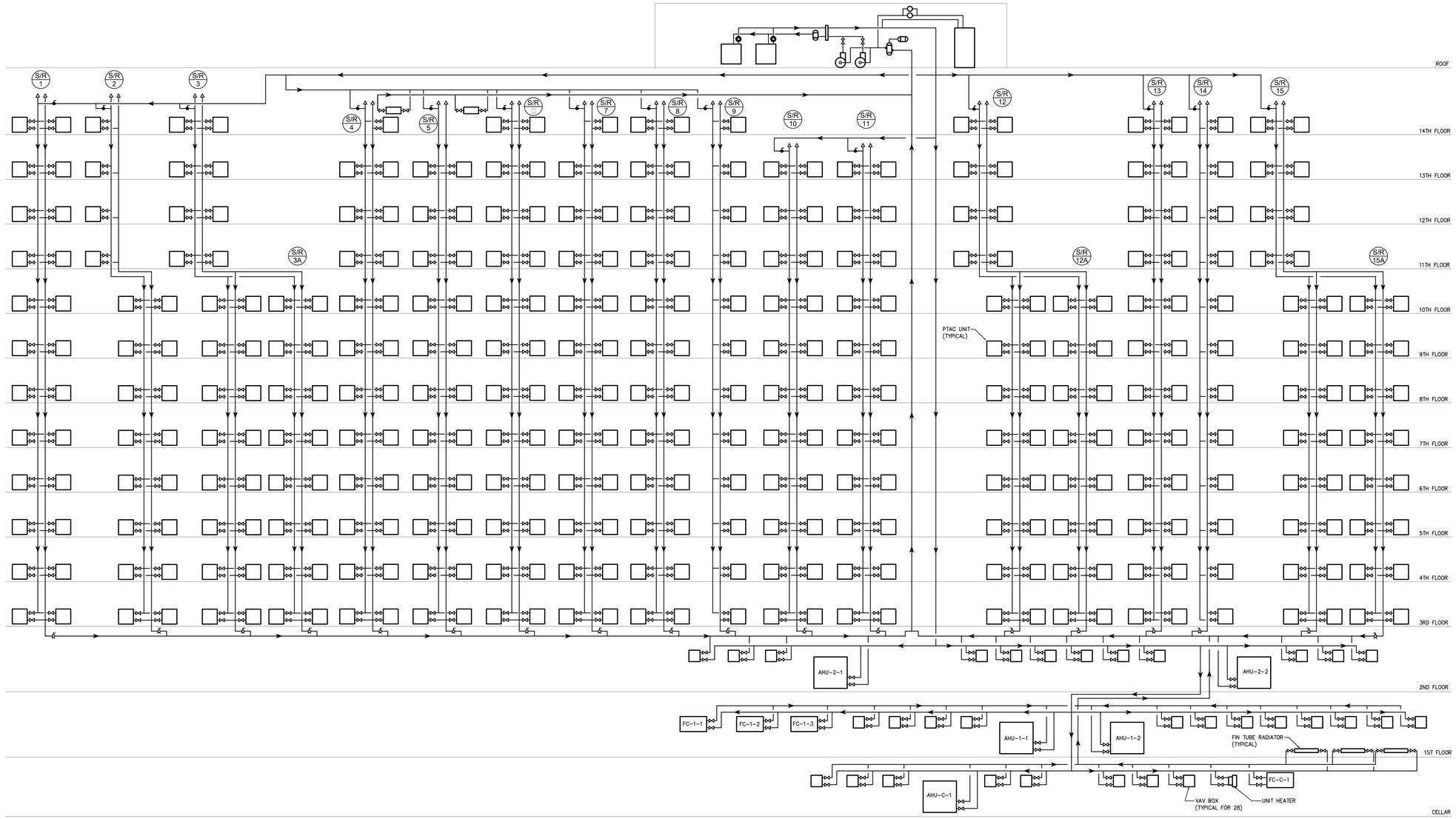

MECHANICAL WATER RISER DIAGRAM
N.T.S.

BUILDING DEPARTMENT NOTE: "THIS PLAN IS APPROVED ONLY FOR WORK INDICATED ON THE APPLICATION SPECIFICATION SHEET. ALL OTHER MATTERS SHOWN ARE NOT TO BE RELIED UPON, OR TO BE CONSIDERED AS EITHER BEING APPROVED OR IN ACCORDANCE WITH APPLICABLE CODES".

ALTERATION OR RE-USE OF THIS DRAWING FOR OTHER THAN THIS PROJECT WITHOUT WRITTEN CONSENT OF THE ABOVE ENGINEER IS PROHIBITED BY LAW.

Client:

RANGER PROPERTIES
4790 BROADWAY
NEW YORK, NY 10034

Architect:

FOGARTY FINGER
architecture | interiors
69 Walker St, New York, NY 10013
t 212 966 7450 f 212 966 7444

Library Architect:

Andrew Berman Architect, PLLC
77 Chambers Street, 4th Floor
New York, NY 10007
Tel 212.22[illegible].5998

Structural:

Thornton Tomasetti
51 Madison Avenue
New York, NY 10010
Tel 917.[illegible]1.7800

MEP / FP:

Concessi Engineering, PC
499 7th Avenue, 11th Floor South Tower
New York, NY 10018
Tel 212.[illegible]29.[illegible]810

FACADE:

SIMPSON GUMPERTZ & HEGER
550 7th Avenue, 10th Floor
New York, NY 10018
Tel 212.271.7000

CODE:

METROPOLIS
22 Courtland Street, 10th Floor
New York, NY 10007
Tel 212.233.[illegible]344

No.	Date	Issue
3	02/06/19	ISSUED FOR FILING / DD ESTIMATING
2	01/29/19	ISSUED FOR PROGRESS
1	01/04/19	ISSUED FOR PROGRESS & COORDINATION

Project:

4790 BROADWAY
NEW YORK, NY 10034

Drawing Title:

MECHANICAL
HOT WATER RISER
DIAGRAM

Seal & Signature:

STATE OF NEW YORK
ROBERT L. CONCESSI
No. 86705
LICENSED PROFESSIONAL ENGINEER

DATE (MM-DD-YY):	11-02-2018
PROJECT No.:	7815.00
DRAWING BY:	SA
CHK BY:	RD/RC
DWG. No.:	M-402.00
CADD FILE No.:	–

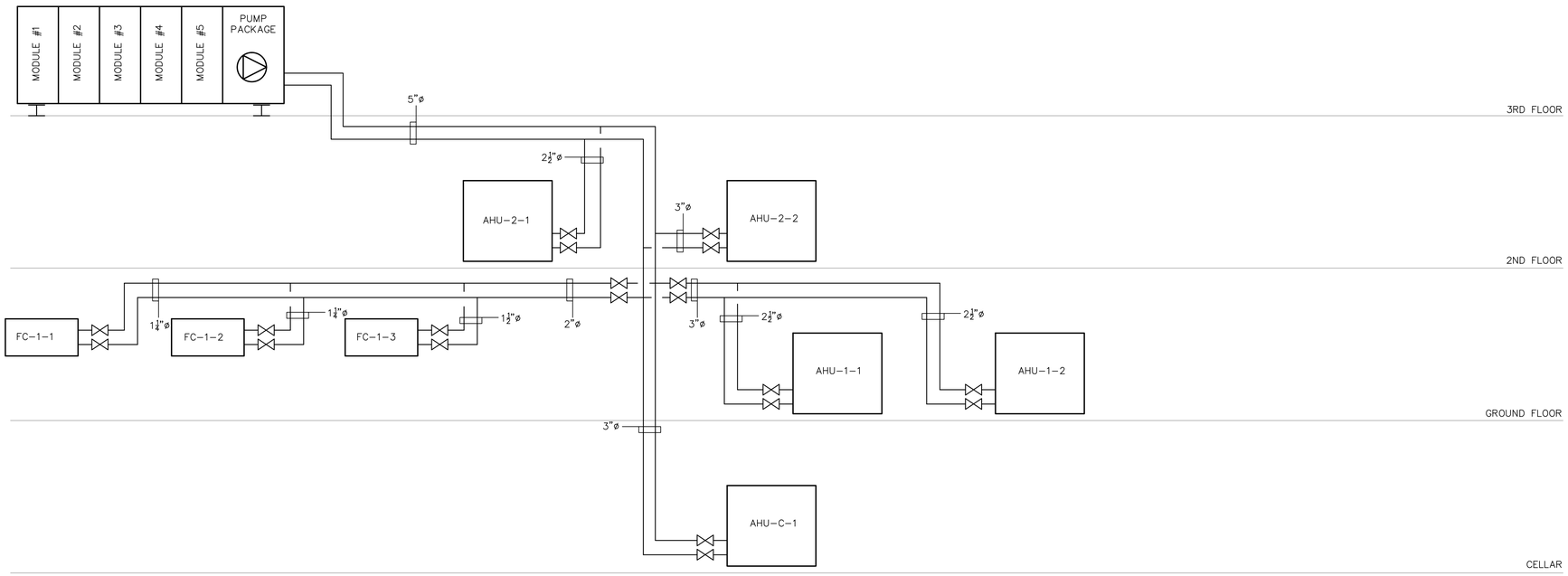

MECHANICAL CHILLED WATER RISER DIAGRAM

N.T.S.

BUILDING DEPARTMENT NOTE: "THIS PLAN IS APPROVED ONLY FOR WORK INDICATED ON THE APPLICATION SPECIFICATION SHEET. ALL OTHER MATTERS SHOWN ARE NOT TO BE RELIED UPON, OR TO BE CONSIDERED AS EITHER BEING APPROVED OR IN ACCORDANCE WITH APPLICABLE CODES".

ALTERATION OR RE-USE OF THIS DRAWING FOR OTHER THAN THIS PROJECT WITHOUT WRITTEN CONSENT OF THE ABOVE ENGINEER IS PROHIBITED BY LAW.

Client:

RANGER PROPERTIES
4790 BROADWAY
NEW YORK, NY 10034

Architect:

FOGARTY FINGER
architecture | interiors
69 Walker St, New York, NY 10013
t 212 966 7450 f 212 966 7444

Library Architect:

Andrew Berman Architect, PLLC
77 Chambers Street, 4th Floor
New York, NY 10007
Tel 212.22[illegible].5998

Structural:

Thornton Tomasetti
51 Madison Avenue
New York, NY 10010
Tel 917.[illegible]1.7800

MEP / FP:

Concessi Engineering, PC
499 7th Avenue, 11th Floor South Tower
New York, NY 10018
Tel 212.[illegible]29.[illegible]810

FACADE:

SIMPSON GUMPERT[illegible]EGER
550 7th Avenue, 10th Floor
New York, NY 10018
Tel 212.271.7000

CODE:

METROPOLIS
22 Courtland Street, 10th Floor
New York, NY 10007
Tel 212.233.[illegible]344

No.	Date	Issue
3	02/06/19	ISSUED FOR FILING / DD ESTIMATING
2	01/29/19	ISSUED FOR PROGRESS
1	01/04/19	ISSUED FOR PROGRESS & COORDINATION

Project:

4790 BROADWAY
NEW YORK, NY 10034

Drawing Title:

MECHANICAL
CHILLED WATER RISER
DIAGRAM

Seal Signature:

STATE OF NEW YORK
ROBERT L. CONCESSI
No. 86705
LICENSED PROFESSIONAL ENGINEER

DATE (MM-DD-YY):	11-02-2018
PROJECT No.:	7815.00
DRAWING BY:	SA
CHK BY:	RD/RC
DWG. No.:	M-403.00
CADD FILE No.:	–

FAN COIL UNIT SCHEDULE

	UNIT NO.	FC-C-1	FC-1-1	FC-1-2	FC-1-3
	LOCATION	CELLAR	UPK	STEM	ELIZA
	SERVICE	LIBRARY	LOBBY	LOBBY	LOBBY
	TYPE	HORIZ. CLG.	HORIZ. CLG.	HORIZ. CLG.	HORIZ. CLG.
FAN	CFM	1,500	1,200	1,200	2,000
	EXT. SP. IN.	0.5	0.8	0.8	1.0
	QUANTITY	2	1,093	1,093	1,215
	HP	1/3 EACH	1.0	1.0	1.0
	DRIVE	DIRECT	DIRECT	DIRECT	DIRECT
COOLING	EAT (DB/WB) (°F)	N/A	80/67	80/67	80/67
	TOTAL MBH	N/A	37.7	37.7	62.7
	SENSIBLE MBH	N/A	30.2	30.2	48.2
	EWT/LWT (°F)	N/A	45.0/55.1	45.0/55.1	45.0/54.0
	GPM	N/A	8.4	8.4	15.7
	MAX P.D. (FT)	N/A	.85	.85	7.25
	MIN ROWS	N/A	8	8	4
HEATING	EAT (°F)	70.0	60.0	60.0	60.0
	TOTAL MBH	101.8	58.7	58.7	86.7
	NO. ROWS	4	2	2	2
	GPM	10.2	6	6	8.8
	EWT (°F)	150	150	150	150
	MAX P.D. (FT)	11.35	3.09	3.09	0.55
ELECTRICAL	VOLT/ϕ/Hz	208/1/60	208/1/60	208/1/60	208/1/60
	MOTOR TYPE	DIRECT DRIVE ECM	DIRECT DRIVE ECM	DIRECT DRIVE ECM	DIRECT DRIVE ECM
	HP	2/3	1	1	1
	FLA	6	9.4	9.4	9.4
STARTER	TYPE	HOA	HOA	HOA	HOA
	SWITCHES	ON/OFF	ON/OFF	ON/OFF	ON/OFF
VIBRATION ISOLATION	TYPE	DNHS	DNHS	DNHS	DNHS
	DEFLECTION	1/4	1/4	1/4	1/4
FILTER	TYPE	THROWAWAY	THROWAWAY	THROWAWAY	THROWAWAY
	EFF. %	MERV 8	MERV 8	MERV 8	MERV 8
WEIGHT (LBS)		205	529	529	597
MANUFACTURER		ENVIROTEC	ENVIROTEC	ENVIROTEC	ENVIROTEC
MODEL NO.		HPP16	HDD30	HDD30	HDD40

ENERGY RECOVERY UNIT SCHEDULE

		UNIT NO.	ERV-1
		LOCATION	ROOF MER
HEAT WHEEL	COOLING	OA EAT (DB/WB) (°F)	89.7/77
		EA EAT (DB/WB) (°F)	77.4/65.9
		SA LAT (DB/WB) (°F)	50.9/50.2
		SENSIBLE EFFICIENCY	223.4
	HEATING	OA EAT (DB) (°F)	12.8
		EA EAT (DB) (°F)	62
		SA LAT (DB) (°F)	119.6
		SENSIBLE EFFICIENCY	132.1
		CFM	11,000
DX COIL		EAT (DB/WB) (°F)	77.4/65.9
		LAT (DB/WB) (°F)	50.9/50.2
		MBH (T/S)	354.5/223.4
		REFRIGERANT	R-410A
SUPPLY FAN		QUANTITY	2
		CFM	3,838
		TSP ("WC)	3.12
		BHP	2.66
		MHP	3
		RPM	1,957
		MOTOR RPM	VFD
EXHAUST FAN		QUANTITY	2
		CFM	5,500
		TSP ("WC)	3.37
		BHP	4.27
		MHP	5
		RPM	1,767
		MOTOR RPM	VFD
AIR COOLED REFRIGERATION		MBH	354.5
		AMBIENT TEMP (°F)	95
		EER	17.2
MANUFACTURER			VALENT
MODEL NO.			VPRE-352-30F-60I-A-1GA

CEILING SUPPLY DIFFUSER SCHEDULE (CD)

CFM RANGE	NECK SIZE	FACE SIZE	MANUFACTURER	MODEL
0-100	6"ø	12X12	TITUS	OMNI
101-210	8"ø	24X24	TITUS	OMNI
211-330	10"ø	24X24	TITUS	OMNI
331-480	12"ø	24X24	TITUS	OMNI
481-650	14"ø	24X24	TITUS	OMNI

NOTES:

1. COORDINATE AIR OUTLET BORDER STYLE, COLOR AND TYPE WITH ARCHITECT PRIOR TO PURCHASE.
2. PROVIDE PLASTIC FRAMES FOR SHEETROCK AREAS, MODEL TRM-5.
3. DIRECTIONAL BLANK OFFS TO BE FIELD INSTALLED BY MECHANICAL CONTRACTOR AS INDICATED ON DRAWINGS.

EXHAUST REGISTER SCHEDULE (CR)

CFM RANGE	NOMINAL SIZE	MANUFACTURER	MODEL
0-80	6 X 6	ANEMOSTAT	S3HOD
81-130	8 X 8	ANEMOSTAT	S3HOD
131-180	10 X 10	ANEMOSTAT	S3HOD
181-270	12 X 12	ANEMOSTAT	S3HOD

NOTES:

1. COORDINATE AIR OUTLET BORDER STYLE, MATERIAL AND FINISH WITH ARCHITECT PRIOR TO PURCHASE.
2. TOP REGISTERS SHALL BE PROVIDED WITH MANUFACTURER SUPPLIED OPPOSED BLADE DAMPERS.
3. ALL REGISTERS SERVING BATHROOM SHALL BE LOCATED BELOW CEILING. COORDINATE WITH ARCHITECT AND GENERAL CONTRACTOR.

SUPPLY REGISTER SCHEDULE

SIZE	MANUFACTURER	SERIES	S.P. IN INCHES	CFM	N.C. IN dB	TYPE
8 X 4	CARNES	RNFAH	.015	75	<=20	DUCTED
12 X 8	CARNES	RNFAH	.058	450	<=20	DUCTED
14 X 10	CARNES	RNFAH	.068	750	<=20	DUCTED
20 X 20	CARNES	RNFAH	.030	1475	<=20	DUCTED

NOTES:

1. ALL EXHAUST GRILLES TO HAVE WHITE PRIME FINISH, FIRE DAMPER BEHIND AT SHAFT WALLS AND WHERE SHOWN, AND OPPOSED BLADE DAMPER. WHERE FIRE DAMPERS ARE LOCATED BEHIND AIR OUTLETS, THE AIR OUTLETS ARE TO BE INCREASED IN SIZE TO COMPENSATE FOR THE ENCROACHMENT OF THE CLOSED FIRE DAMPER SHUTTER IN THE AIR STREAM.

CEILING RETURN GRILLE SCHEDULE (CG)

CFM RANGE	NECK SIZE	FACE SIZE	MANUFACTURER	MODEL
0-800	22 X 10	24 X 12	TITUS	50F
801-2,000	22 X 22	24 X 24	TITUS	50F

NOTES:

1. COORDINATE AIR OUTLET BORDER STYLE, COLOR AND TYPE WITH ARCHITECT PRIOR TO PURCHASE.

CONDENSING BOILER SCHEDULE

GENERAL INFORATION						CAPACITY					HYDRONIC				ELECTRICAL		NG			PHYSICAL DATA			
TAG	QTY	LOCATION	SERVICE	MANUFACTURER	MODEL #	INPUT (BTUh)	OUTPUT (BTUh)	AHRI CERTIFIED EFF. (%)	INTERNAL HEAT EXCHANGERS (#)	TURN-DOWN RATIO	EWT (°F)	LWT (°F)	MAX WORKING PRESSURE (PSIG)	PRESS. RELIEF VALVE SETTING (PSIG)	VOLT/ϕ/Hz	FLA	MIN INLET PRESSURE (IN.WG)	MAX INLET PRESSURE (IN.WG)	GAS CONNECTION (IN)	AIR INTAKE (IN)	VENT CONN-ECTION (IN)	WEIGHT (LBS)	DIMENSIONS (HxWxD) (IN)
B-1	1	ROOF MER	HVAC	RIELLO	AR4000	4,000,000	3,844,000	96.1	8	40:1	130	150	80	75	230/1/60	18	3.5	20	2	10	8	2,204	35.4x83x72.8
B-2	1	ROOF MER	HVAC	RIELLO	AR4000	4,000,000	3,844,000	96.1	8	40:1	130	150	80	75	230/1/60	18	3.5	20	2	10	8	2,204	35.4x83x72.8

PUMP SCHEDULE

GENERAL INFORATION						FLUID		PUMP				ELECTRICAL			
TAG	QTY	LOCATION	SERVICE	MANUFACTURER	MODEL #	FLOW RATE (GPM)	HEAD LOSS (FT)	EFFICIENCY (%)	MATERIAL	NPSH (FT)	TYPE	NOL HP	MOTOR SPEED (RPM)	MOTOR HP	VOLT/ϕ/Hz
HWP-1	1	ROOF MER	HVAC	TACO		768	125	85	IRON	6.81	BASE MOUNTED END SUCTION	7.5	1760	7.5	208/3/60
HWP-2	1	ROOF MER	HVAC	TACO		768	125	85	IRON	6.81	BASE MOUNTED END SUCTION	7.5	1760	7.5	208/3/60

BUILDING DEPARTMENT NOTE: "THIS PLAN IS APPROVED ONLY FOR WORK INDICATED ON THE APPLICATION SPECIFICATION SHEET. ALL OTHER MATTERS SHOWN ARE NOT TO BE RELIED UPON, OR TO BE CONSIDERED AS EITHER BEING APPROVED OR IN ACCORDANCE WITH APPLICABLE CODES".

ALTERATION OR RE-USE OF THIS DRAWING FOR OTHER THAN THIS PROJECT WITHOUT WRITTEN CONSENT OF THE ABOVE ENGINEER IS PROHIBITED BY LAW.

Client:

RANGER PROPERTIES
4790 BROADWAY
NEW YORK, NY 10034

Arc□itect:

FOGARTY FINGER
architecture | interiors

69 Walker St, New York, NY 10013
t 212 966 7450 f 212 966 7444

Li□rary Arc□itect:

Andrew Berman Arc□itect, PLLC
77 C□am□ers Street, 4t□ Floor
New York, NY 10007
Tel 212.22□5998

Structural:

T□ornton Tomasetti
51 Madison Avenue
New York, NY 10010
Tel 917.□□1.7800

MEP / FP:

Concessi Engineering, PC
499 7t□ Avenue, 11t□ Floor Sout□ Tower
New York, NY 10018
Tel 212.□29.□810

FACADE:

SIMPSON G□MPERT□ □ □EGER
550 7t□ Avenue, 10t□ Floor
New York, NY 10018
Tel 212.271.7000

CODE:

METROPOLIS
22 Courtland Street, 10t□ Floor
New York, NY 10007
Tel 212.233.□344

No.	Date	Issue
3	02/06/19	ISSUED FOR FILING / DD ESTIMATING
2	01/29/19	ISSUED FOR PROGRESS
1	01/04/19	ISSUED FOR PROGRESS & COORDINATION

Pro□ect:

4790 BROADWAY
NEW YORK, NY 10034

Drawing Title:

MECHANICAL SCHEDULES SHEET #1 OF 2

Seal □ Signature:

STATE OF NEW YORK · ROBERT J. CONGER · No. 086705 · LICENSED PROFESSIONAL ENGINEER

DATE (MM-DD-YY):	11-02-2018
PROJECT No.:	7815.00
DRAWING BY:	SA
CHK BY:	RD/RC
DWG. No.:	M-501.00
CADD FILE No.:	—

AIR-COOLED CHILLER SCHEDULE

UNIT NO.	NO. OF MODULES	TONS	GPM	MBH	FREE COOLING	FLUID ENT./LVG. (°F)	AMBIENT (°F)	WTR AP	LOW AMBIENT CONTROL	REFRIGERANT	OPERATING WEIGHT	ELECT. DATA (V/PH/HZ)	COMPRESSORS (EA)				FANS (EA)		TOTAL FLA	MCA	MOP	MANUFACTURER	MODEL
													QTY	HP	LRA	RLA	QTY	FLA					
CH-1	5	150	348	1,589	1,589	55/45	95			R-410A	17,000	208/3/60	10	15	340	46	12	123.2	132.2	692	800	ARCTICHILL	PACVMV0300D3-MM-FC

AIR HANDLING UNIT SCHEDULE

UNIT NO.		AHU-C-1	AHU-1-1	AHU-1-2	AHU-2-1	AHU-2-2
LOCATION		CELLAR MER	1ST FLOOR MER	1ST FLOOR MER	MER	MER
SERVICE		ACT	LIBRARY	LIBRARY	UPK	LIBRARY
TYPE		VERTICAL	VERTICAL	VERTICAL	VERTICAL	VERTICAL
FAN	CFM	11,500	7,000	7,000	9,000	13,500
	EXT. SP. IN.	2.5	1.5	1.5	1.5	1.5
	RPM	–	–	–	–	–
	HP	10	7.5	7.5	10	10
	DRIVE	–	–	–	–	–
COOLING	EAT (DB/WB) (°F)	80/67	80/67	80/67	80/67	80/67
	TOTAL MBH	378.2	220.0	220.0	294.7	422.7
	FACE AREA SQ. FT.	245	169.1	169.1	220.3	326.7
	EWT/LWT (°F)	45.0/56.1	45.0/55.8	45.0/55.8	45.0/54.8	45.0/57.2
	GPM	–	–	–	–	–
	FINS PER FOOT	10	10	10	10	10
	NO. ROWS	6	6	6	6	6
HEATING	EAT/LAT (°F)	60.0/103	60.0/99.3	60.0/99.3	60.0/104.4	60.0/105.6
	TOTAL MBH	537.3	298.7	298.7	433.3	668.3
	NO. ROWS	2	2	2	2	2
	GPM	–	–	–	–	–
	EWT/LWT (°F)	150/130	150/130	150/130	150/130	150/130
	FINS PER FOOT	10	10	10	10	10
	FACE AREA SQ. FT.	24.5	169.1	169.1	220.3	326.7
ELECTRICAL	VOLT/ϕ/Hz	208/3/60	208/3/60	208/3/60	208/3/60	208/3/60
	MOTOR TYPE	–	–	–	–	–
	HP	–	–	–	–	–
	FLA	–	–	–	–	–
STARTER	TYPE	–	–	–	–	–
	SWITCHES	–	–	–	–	–
VIBRATION ISOLATION	TYPE	–	–	–	–	–
	DEFLECTION	–	–	–	–	–
FILTER	TYPE	THROWAWAY	THROWAWAY	THROWAWAY	THROWAWAY	THROWAWAY
	EFF. %	MERV 8	MERV 8	MERV 8	MERV 8	MERV 8
WEIGHT (LBS)		–	–	–	–	–
MANUFACTURER		WITT	WITT	WITT	WITT	WITT
MODEL NO.		MVL31	MVL31	MVL31	MVL31	MVL31

FAN SCHEDULE

UNIT NO.		SP-1	SP-2	SP-3	SP-4	SP-5	SP-6	SP-7	KEF-7	DX-1
LOCATION		MULTI-PURPOSE ROOM	CELLAR KITCHEN	CELLAR KITCHEN	3RD FLR ROOF SETBACK	3RD FLR ROOF SETBACK	3RD FLR ROOF SETBACK	3RD FLR ROOF SETBACK	ROOF	ROOF
SERVICE		SMOKE PURGE	SMOKE PURGE	SMOKE PURGE	SMOKE PURGE	SMOKE PURGE	SMOKE PURGE	SMOKE PURGE	KITCHEN EXHAUST	DRYER EXHAUST
FAN DATA	CFM	6,150	6,150	6,150	8,400	12,450	12,450	12,450		
	TYPE	CENTRIFUGAL INLINE	CENTRIFUGAL INLINE	CENTRIFUGAL INLINE	CENTRIFUGAL DOWNBLAST	CENTRIFUGAL DOWNBLAST	CENTRIFUGAL DOWNBLAST	CENTRIFUGAL DOWNBLAST		
	TOT. SP (IN.)	.25	.25	.25	.5	.5	.5	.5		
	RPM	1,547	1,547	1,547	623	840	840	840		
	DRIVE	BELT	BELT	BELT	BELT	BELT	BELT	BELT		
	WHEEL									
ELECTRICAL DATA	MOTOR HP	3	3	3	2	5	5	5		
	RPM	1,725	1,725	1,725	1,725	1,725	1,725	1,725		
	Volts/Ph/Hz	208/3/60	208/3/60	208/3/60	208/3/60	208/3/60	208/3/60	208/3/60		
STARTER	TYPE									
	SWITCHES	TOGGLE	TOGGLE	TOGGLE	TOGGLE	TOGGLE	TOGGLE	TOGGLE		
DIMENSIONS (LxWxH)		31"x27"x40"	31"x27"x40"	31"x27"x40"	50"x50"x36"	50"x50"x36"	50"x50"x36"	50"x50"x36"		
WEIGHT (LBS.)		216	216	216	33	223	223	223		
MANUFACTURER		GREENHECK	GREENHECK	GREENHECK	GREENHECK	GREENHECK	GREENHECK	GREENHECK		
MODEL No.		BSQ-180-30	BSQ-180-30	BSQ-180-30	GB-300	GB-300	GB-300	GB-300		

VAV BOX SCHEDULE

TYPE	SINGLE DUCT VAV	SINGLE DUCT VAV	SINGLE DUCT VAV	SINGLE DUCT VAV	SINGLE DUCT VAV	SINGLE DUCT VAV
INLET SIZE	6"ø	8"ø	10"ø	12"ø	14"ø	16"ø
CFM RANGE	0-350	351-800	801-1,100	1,101-1,500	1,501-2,100	2,101-3,100
CONTROL	DDC ELECTRONIC	DDC ELECTRONIC	DDC ELECTRONIC	DDC ELECTRONIC	DDC ELECTRONIC	DDC ELECTRONIC
DIMENSIONS	12½"LX10"WX10"H	12½"LX12"WX10"H	14½"LX14"WX12½"H	18½"LX16"WX15"H	18½"LX20"WX17½"H	18½"LX24"WX17½"H
WEIGHT (LBS.)	9	11	15	19	23	28
ACCESSORIES	SEE NOTES	SEE NOTES	SEE NOTES	SEE NOTES	SEE NOTES	SEE NOTES
MANUFACTURER	ANEMOSTAT	ANEMOSTAT	ANEMOSTAT	ANEMOSTAT	ANEMOSTAT	ANEMOSTAT
MODEL No.	EZTS-DDC	EZTS-DDC	EZTS-DDC	EZTS-DDC	EZTS-DDC	EZTS-DDC

NOTES:

1. THE MINIMUM CFM FOR EACH VAV BOX SHALL BE 30% OF TOTAL CFM INDICATED ON PLANS.
2. DDC POWER AND CONTROLS SHALL BE PROVIDED BY AUTOMATIC TEMPERATURE CONTROL CONTRACTOR.
3. AUTOMATIC TEMPERATURE CONTROL CONTRACTOR SHALL PROVIDE A THERMOSTAT. FOR EXACT TYPE OF THERMOSTAT, AUTOMATIC TEMPERATURE CONTROL CONTRACTOR SHALL COORDINATE AND VERIFY WITH BASE BUILDING MANAGEMENT AND ENGINEER AND ARCHITECT.
4. CONTROLS SHALL BE INSTALLED BY THE BOX MANUFACTURER. MECHANICAL CONTRACTOR SHALL COORDINATE INSTALLATION OF DIGITAL CONTROLS.
5. PROVIDE FACTORY SUPPLIED CONTROL TRANSFORMER, CROSSFLOW VELOCITY SENSOR, AND CONTROL ENCLOSURE.
6. PROVIDE FACTORY INSTALLED 1" THICK ALUMINUM FOIL-FACED DUAL DENSITY GLASS FIBER FIBRE-LOK INSULATION, 6"X6" BOTTOM ACCESS PLATE AND STANDARD CONTROL ENCLOSURE FOR ALL VAV BOXES.
7. MECHANICAL CONTRACTOR SHALL COORDINATE RIGHT HAND OR LEFT HAND CONTROL PRIOR TO PURCHASE.

PTAC UNIT SCHEDULE

DESIGNATION	LOCATION	COOLING (MBH)	HEATING (MBH)	AIR FLOW	FAN MOTOR HP	REFRIGERANT TYPE	ELECTRICAL			OPERATING WEIGHT (LBS)	DIMENSIONS (IN) LxWxH	MANUFACTURER	MODEL	EER
		TOTAL	TOTAL	CFM			V/ø/Hz	FLA	MOP (A)					
TYPE A	APARTMENTS	9.5	16.5	390	ECM	R-410A	208/1/60	4.1	5	155	46¾x23¾x20½	SIMON-AIRE	SSNY809H-TP	11.18
TYPE B	APARTMENTS	12.9	16.5	390	ECM	R-410A	115/1/60	11.1	15	158	46¾x23¾x20½	SIMON-AIRE	SSNY513H-TP	10.01
TYPE C	APARTMENTS	16.0	16.5	390	ECM	R-410A	208/1/60	8.2	10	158	46¾x23¾x20½	SIMON-AIRE	SSCT816H-TP	9.45

BUILDING DEPARTMENT NOTE: "THIS PLAN IS APPROVED ONLY FOR WORK INDICATED ON THE APPLICATION SPECIFICATION SHEET. ALL OTHER MATTERS SHOWN ARE NOT TO BE RELIED UPON, OR TO BE CONSIDERED AS EITHER BEING APPROVED OR IN ACCORDANCE WITH APPLICABLE CODES".

ALTERATION OR RE-USE OF THIS DRAWING FOR OTHER THAN THIS PROJECT WITHOUT WRITTEN CONSENT OF THE ABOVE ENGINEER IS PROHIBITED BY LAW.

Client:

RANGER PROPERTIES
4790 BROADWAY
NEW YORK, NY 10034

Arc□itect:

FOGARTY FINGER architecture | interiors
69 Walker St, New York, NY 10013
t 212 966 7450 f 212 966 7444

Li□rary Arc□itect:

Andrew Berman Arc□itect, PLLC
77 C□am□ers Street, 4t□ Floor
New York, NY 10007
Tel 212.22□5998

Structural:

T□ornton Tomasetti
51 Madison Avenue
New York, NY 10010
Tel 917.□□1.7800

MEP / FP:

Concessi Engineering, PC
499 7t□ Avenue, 11t□ Floor Sout□ Tower
New York, NY 10018
Tel 212.□29.□810

FACADE:

SIMPSON G□MPERT□ □ □EGER
550 7t□ Avenue, 10t□ Floor
New York, NY 10018
Tel 212.271.7000

CODE:

METROPOLIS
22 Courtland Street, 10t□ Floor
New York, NY 10007
Tel 212.233.□344

No.	Date	Issue
1	01/29/19	ISSUED FOR PROGRESS

Pro□ect:

4790 BROADWAY
NEW YORK, NY 10034

Drawing Title:

MECHANICAL SCHEDULES SHEET #2 OF 2

Seal □ Signature:

STATE OF NEW YORK · ROBERT V. CONCESSI · No. 86705 · LICENSED PROFESSIONAL ENGINEER

DATE (MM-DD-YY):	11-02-2018
PROJECT No.:	7815.00
DRAWING BY:	SA
CHK BY:	RD/RC
DWG. No.:	M-502.00
CADD FILE No.:	22 OF 27

H:\ACAD\AUTOCAD\4790 Broadway, Ranger\DESIGN\MECHANICAL\M-502 (Schedules).dwg 2/6/2019 3:37:43 PM

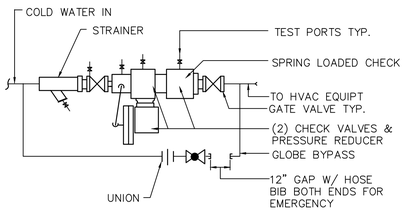

NYC M.E.A.#20-78-M MFR: LAWLER ITT MODEL RZS

COLD WATER MAKEUP BACK FLOW PREVENTER

NOT TO SCALE

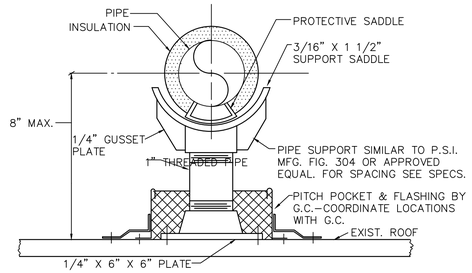

ROOF MOUNTED PIPE SUPPORT DETAIL

NOT TO SCALE

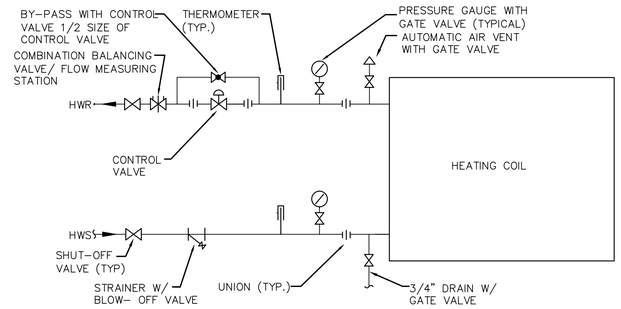

NOTES:
1. ALL REDUCERS SHALL BE ECCENTRIC TYPE.
2. VENT ALL HIGH POINTS OF PIPING SYSTEM.

HEATING COIL CONNECTION-HOT WATER (SINGLE COIL)

NOT TO SCALE

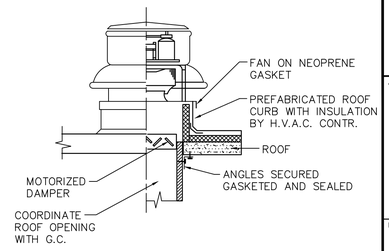

ROOF EXHAUST DETAIL

NOT TO SCALE

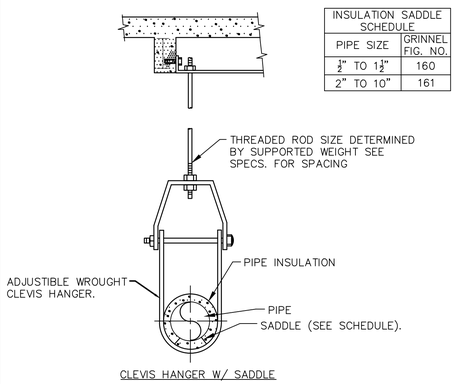

INSULATION SADDLE SCHEDULE	
PIPE SIZE	GRINNEL FIG. NO.
¾" TO 1½"	160
2" TO 10"	161

CLEVIS HANGER W/ SADDLE

PIPE HANGING DETAIL

NOT TO SCALE

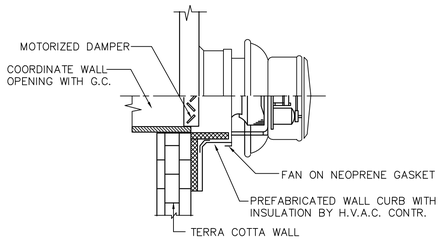

SIDE WALL EXHAUST DETAIL

NOT TO SCALE

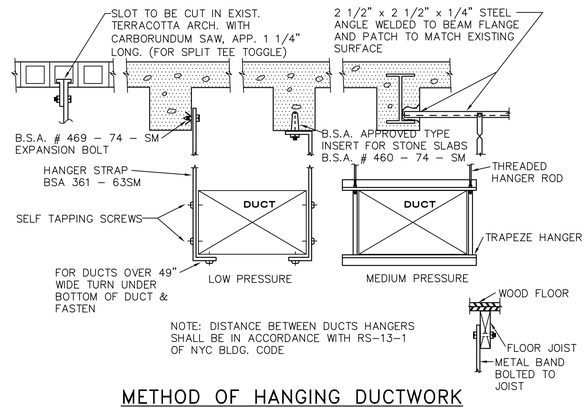

NOTE: DISTANCE BETWEEN DUCTS HANGERS SHALL BE IN ACCORDANCE WITH RS-13-1 OF NYC BLDG. CODE

METHOD OF HANGING DUCTWORK

NOT TO SCALE

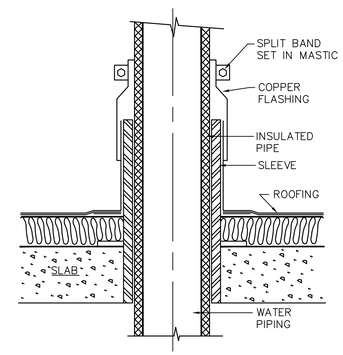

PIPE PENETRATION AT ROOF

NOT TO SCALE

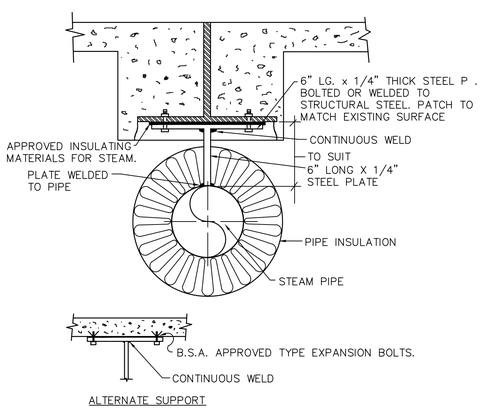

ALTERNATE SUPPORT

PIPE ANCHOR DETAIL

NOT TO SCALE

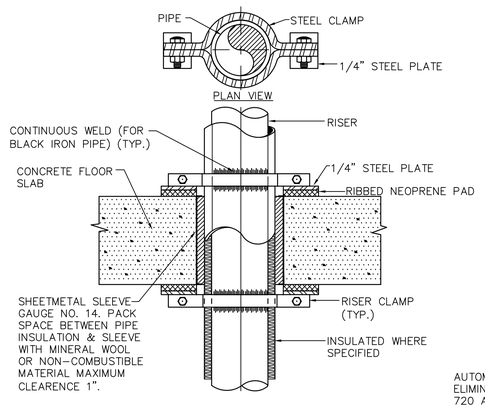

PIPE ANCHOR-(3" & BELOW)

NOT TO SCALE

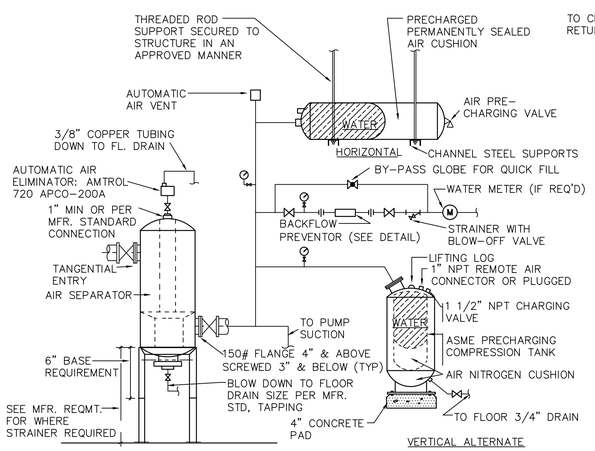

VERTICAL ALTERNATE

COMPRESSION TANK W/ AIR SEPARATOR PRECHARGE DIAPHRAGM TYPE

NOT TO SCALE

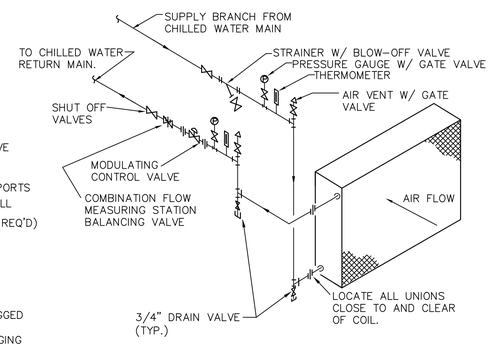

NOTE:
1. HOOK UP COIL CONTERFLOW

SINGLE COOLING COIL CONNECTION

NOT TO SCALE

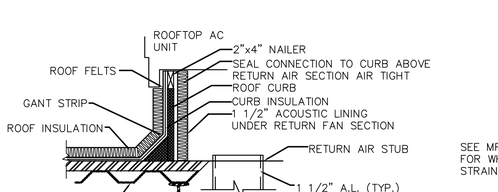

NOTE: ROOF CURB UNDER RETURN AIR FAN TO BE USED AS A RETURN AIR PLENUM. PROVIDE CURB CROSS MEMBERS AS REQUIRED.

ROOF CURB DETAIL

NOT TO SCALE

BUILDING DEPARTMENT NOTE: "THIS PLAN IS APPROVED ONLY FOR WORK INDICATED ON THE APPLICATION SPECIFICATION SHEET. ALL OTHER MATTERS SHOWN ARE NOT TO BE RELIED UPON, OR TO BE CONSIDERED AS EITHER BEING APPROVED OR IN ACCORDANCE WITH APPLICABLE CODES".

ALTERATION OR RE-USE OF THIS DRAWING FOR OTHER THAN THIS PROJECT WITHOUT WRITTEN CONSENT OF THE ABOVE ENGINEER IS PROHIBITED BY LAW.

Client:

RANGER PROPERTIES
4790 BROADWAY
NEW YORK, NY 10034

Arc□itect:

FOGARTY FINGER architecture | interiors

69 Walker St, New York, NY 10013
t 212 966 7450 f 212 966 7444

Li□rary Arc□itect:

Andrew Berman Arc□itect, PLLC
77 C□am□ers Street, 4t□ Floor
New York, NY 10007
Tel 212.22□5998

Structural:

T□ornton Tomasetti
51 Madison Avenue
New York, NY 10010
Tel 917.□□1.7800

MEP / FP:

Concessi Engineering, PC
499 7t□ Avenue, 11t□ Floor Sout□ Tower
New York, NY 10018
Tel 212.□29.□810

FACADE:

SIMPSON G□MPERT□ □ □EGER
550 7t□ Avenue, 10t□ Floor
New York, NY 10018
Tel 212.271.7000

CODE:

METROPOLIS
22 Courtland Street, 10t□ Floor
New York, NY 10007
Tel 212.233.□344

No.	Date	Issue
3	02/06/19	ISSUED FOR FILING / DD ESTIMATING
2	01/29/19	ISSUED FOR PROGRESS
1	01/04/19	ISSUED FOR PROGRESS & COORDINATION

Pro□ect:

4790 BROADWAY
NEW YORK, NY 10034

Drawing Title:

MECHANICAL DETAILS SHEET #1 OF 5

Seal □ Signature:

STATE OF NEW YORK · ROBERT V. CONCESSI · No. 86705 · LICENSED PROFESSIONAL ENGINEER

DATE (MM-DD-YY):	11-02-2018
PROJECT No.:	7815.00
DRAWING BY:	SA
CHK BY:	RD/RC
DWG. No.:	M-601.00
CADD FILE No.:	23 OF 27

H:\ACAD\AUTOCAD\4790 Broadway, Ranger\DESIGN\MECHANICAL\M-601 (Details).dwg, 2/6/2019 3:37:43 PM

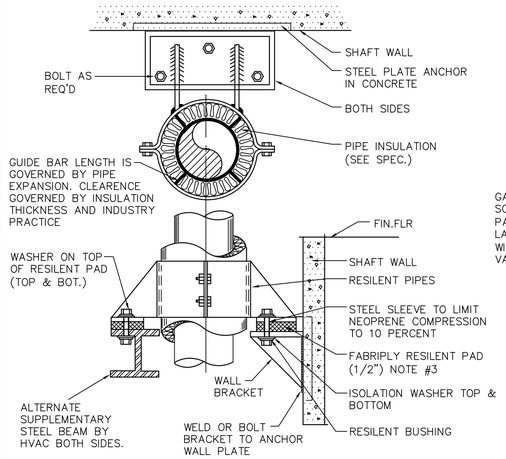

NOTES:
1. FOR ANCHORING OF VERTICAL PIPES, WELD GUIDE BARS TO PIPE & CYLINDER.
2. SUBMIT ANCHOR LOAD CALCULATIONS & DETAIL.
3. FOR STEAM & CONDENSATE APPLICATION SUBSTITUTE 1/8" INSULATION MATERIAL.

VERTICAL RISER GUIDE & ANCHOR (4" & ABOVE)

NOT TO SCALE

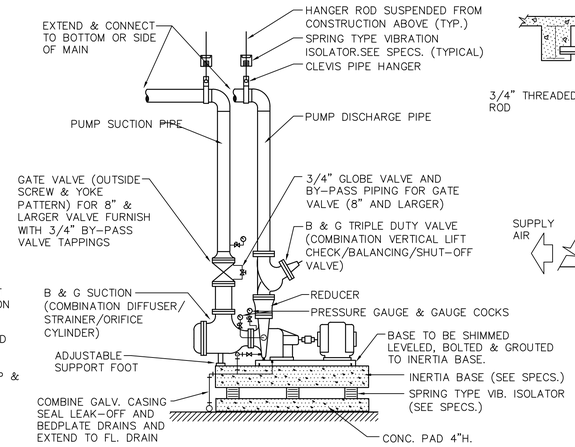

END-SUCTION WATER PUMP W/ SUCTION DIFFUSER & TRIPLE DUTY VALVE

NOT TO SCALE

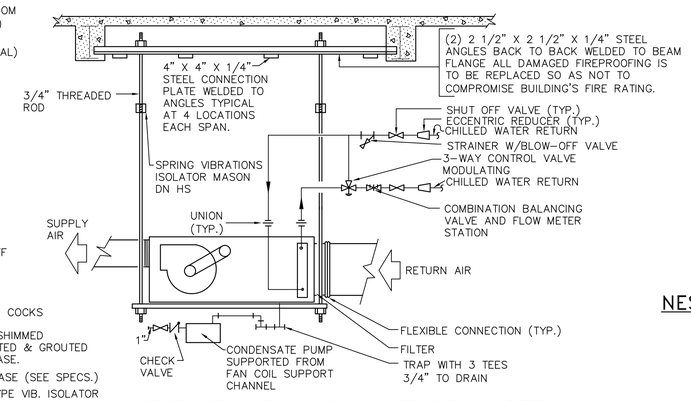

HORIZONTAL FAN COIL UNIT PIPING DETAIL

NOT TO SCALE

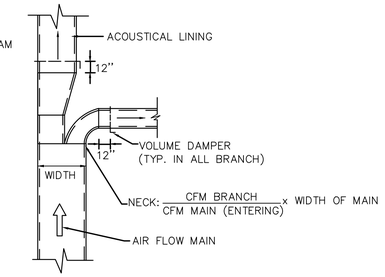

NESTED LOW PRESSURE BRANCH TAKE-OFF

NOT TO SCALE

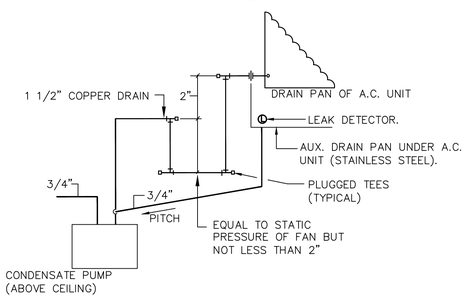

TYPICAL DRAIN HOOKUP

NOT TO SCALE

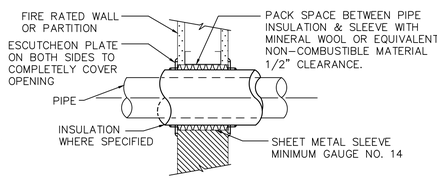

NOTE:
1.) THE INSTALLATION OF FIRE STOPPING MATERIALS SHALL BE SUBJECT TO CONTROLLED INSPECTION IN ACCORDANCE WITH C26-106.3.

PIPE SLEEVE THRU INTERIOR WALL

NOT TO SCALE

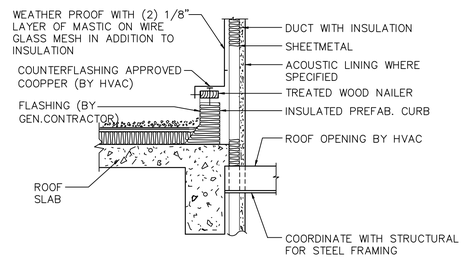

DUCT PENETRATION THRU ROOF

NOT TO SCALE

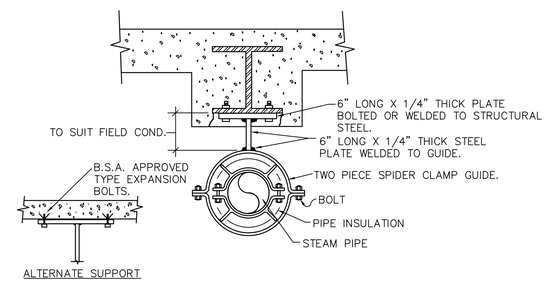

PIPE GUIDE

NOT TO SCALE

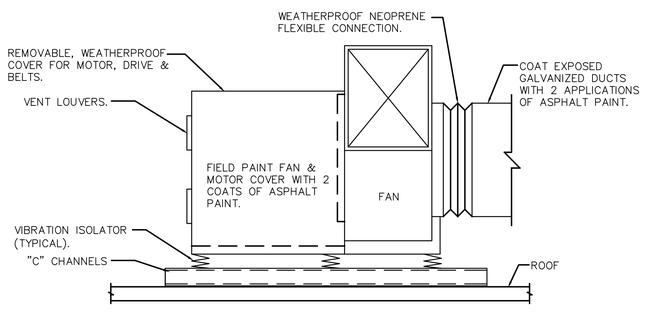

ROOF INSTALLATION OF UTILITY FAN

NOT TO SCALE

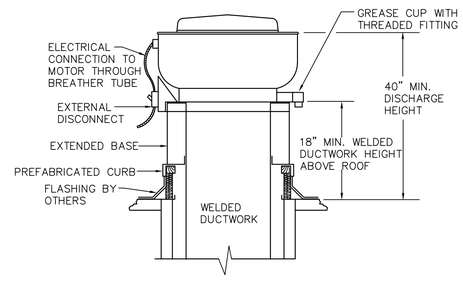

KITCHEN ROOF EXHAUST FAN DETAIL

NOT TO SCALE

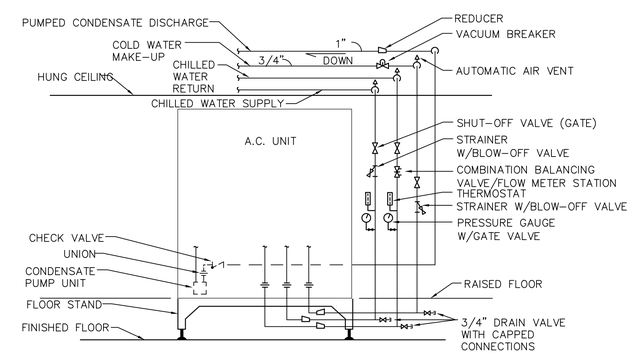

COMPUTER ROOM A/C UNIT CHILLED WATER PIPING DETAIL

NOT TO SCALE

BUILDING DEPARTMENT NOTE: "THIS PLAN IS APPROVED ONLY FOR WORK INDICATED ON THE APPLICATION SPECIFICATION SHEET. ALL OTHER MATTERS SHOWN ARE NOT TO BE RELIED UPON, OR TO BE CONSIDERED AS EITHER BEING APPROVED OR IN ACCORDANCE WITH APPLICABLE CODES".

ALTERATION OR RE-USE OF THIS DRAWING FOR OTHER THAN THIS PROJECT WITHOUT WRITTEN CONSENT OF THE ABOVE ENGINEER IS PROHIBITED BY LAW.

Client:

RANGER PROPERTIES
4790 BROADWAY
NEW YORK, NY 10034

Arc□itect:

FOGARTY FINGER architecture | interiors

69 Walker St, New York, NY 10013
t 212 966 7450 f 212 966 7444

Li□rary Arc□itect:

Andrew Berman Arc□itect, PLLC
77 C□am□ers Street, 4t□ Floor
New York, NY 10007
Tel 212.22□5998

Structural:

T□ornton Tomasetti
51 Madison Avenue
New York, NY 10010
Tel 917.□□1.7800

MEP / FP:

Concessi Engineering, PC
499 7t□ Avenue, 11t□ Floor Sout□ Tower
New York, NY 10018
Tel 212.□29.□810

FACADE:

SIMPSON G□MPERT□ □ □EGER
550 7t□ Avenue, 10t□ Floor
New York, NY 10018
Tel 212.271.7000

CODE:

METROPOLIS
22 Courtland Street, 10t□ Floor
New York, NY 10007
Tel 212.233.□344

No.	Date	Issue
2	01/29/19	ISSUED FOR PROGRESS
1	01/04/19	ISSUED FOR PROGRESS & COORDINATION

Project:

4790 BROADWAY
NEW YORK, NY 10034

Drawing Title:

MECHANICAL DETAILS SHEET #2 OF 5

Seal □ Signature:

STATE OF NEW YORK · ROBERT V. CONCESSI · LICENSED PROFESSIONAL ENGINEER · No. 86705

DATE (MM-DD-YY):	11-02-2018
PROJECT No.:	7815.00
DRAWING BY:	SA
CHK BY:	RD/RC
DWG. No.:	M-602.00
CADD FILE No.:	24 OF 27

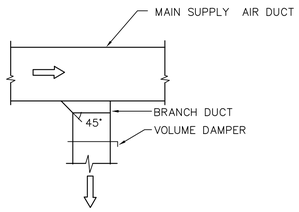

SUPPLY AIR DUCTWORK BRANCH DUCT CONNECTION

NOT TO SCALE

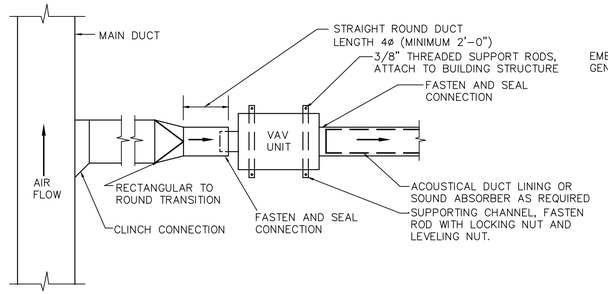

NOTES:

1. THE OPERATION OF VARIABLE VOLUME TERMINAL UNITS ARE AFFECTED BY EXCESSIVE TURBULANCE ON THE ENTERING SIDE OF EACH TERMINAL UNIT THEREFORE, TERMINAL UNITS MUST NOT BE INSTALLED TOO CLOSE TO MAIN DUCTS, ELBOWS AND FITTINGS.
2. WHEN MINIMUM UPSTREAM STRAIGHT DUCT CONNECTION TO TERMINALS AS INDICATED ABOVE CANNOT BE MAINTAINED, PROVIDE ORIFICE PLATE, STRAIGHTENING VANES OR OTHER DEVICE AS RECOMMENDED BY TERMINAL UNIT MANUFACTURER AND SUBMIT TO ENGINEER FOR REVIEW PRIOR TO INSTALLATION.
3. MANUFACTURER OF TERMINAL UNIT SHALL PROVIDE CONTROLS ON LEFT OR RIGHT SIDE AS REQUIRED BY FIELD CONDITIONS.
4. ARRANGE ACCESS TO PERMIT EASY FIELD BALANCE AND MAINTENANCE OF TERMINAL UNIT.

VAV UNIT INSTALLATION DETAIL

NOT TO SCALE

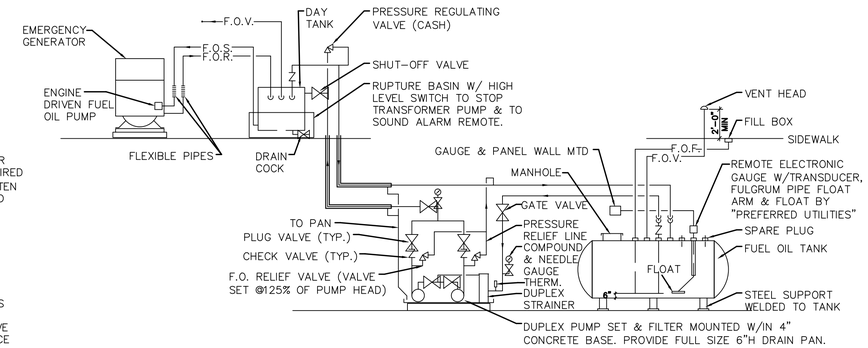

FUEL OIL PIPING SCHEMATIC – GENERATOR

NOT TO SCALE

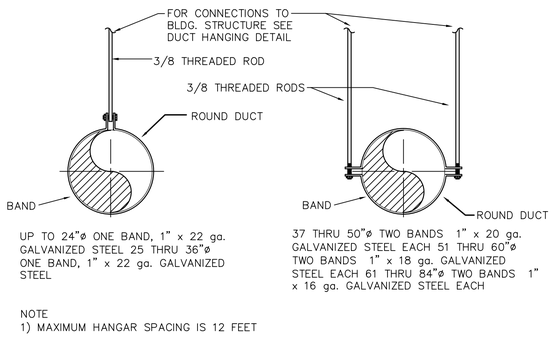

NOTE
1) MAXIMUM HANGAR SPACING IS 12 FEET

ROUND DUCT HANGING DETAIL

NOT TO SCALE

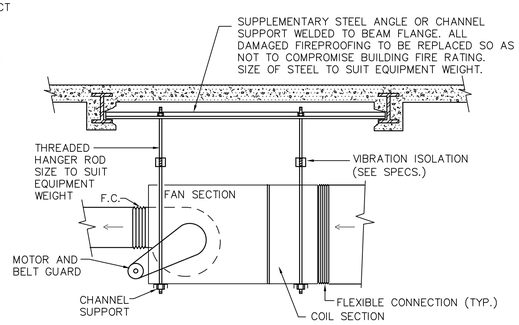

HVAC EQUIPMENT HANGING DETAIL

NOT TO SCALE

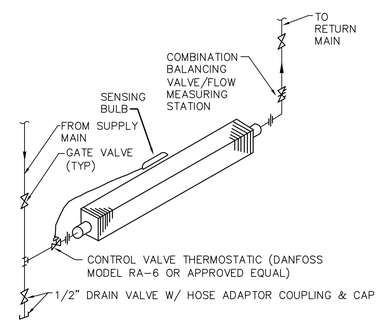

ALL VALVES SHOWN SHALL BE WITHIN ENCLOSURE UNLESS OTHERWISE INDICATED

HOT WATER FIN TUBE RADIATION DOWN FEED

NOT TO SCALE

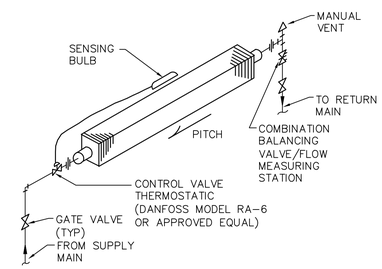

ALL VALVES SHOWN SHALL BE WITHIN ENCLOSURE UNLESS OTHERWISE INDICATED

HOT WATER FIN TUBE RADIATION UP FEED

NOT TO SCALE

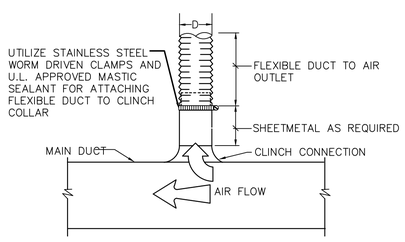

CIRCULAR BRANCH CONNECTION TO VAV BOX

NOT TO SCALE

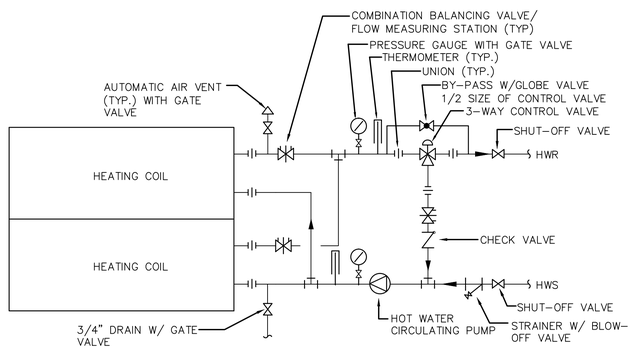

MULTIPLE HEATING COIL DETAIL – HOT WATER (WITH RECIRC. PUMP & 3-WAY VALVE)

NOT TO SCALE

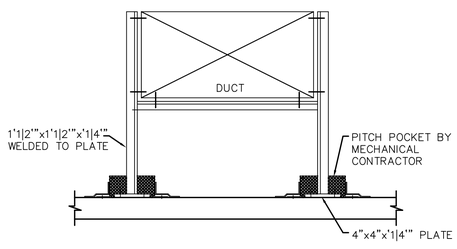

ROOF MOUNTED DUCT SUPPORT DETAIL

NOT TO SCALE

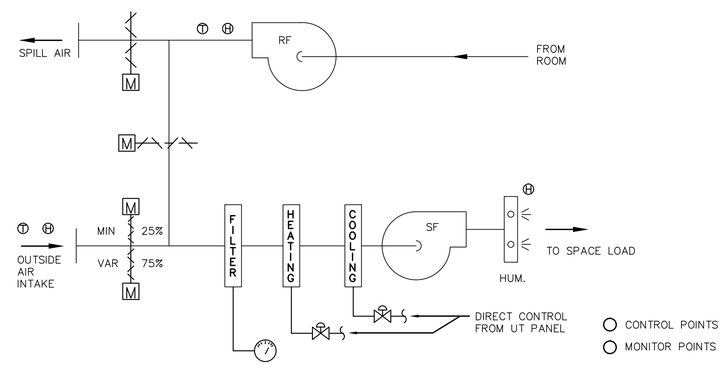

CONTROL STRATEGY – INTERFACE WITH U.T. CONTROLLER

NOT TO SCALE

BUILDING DEPARTMENT NOTE: "THIS PLAN IS APPROVED ONLY FOR WORK INDICATED ON THE APPLICATION SPECIFICATION SHEET. ALL OTHER MATTERS SHOWN ARE NOT TO BE RELIED UPON, OR TO BE CONSIDERED AS EITHER BEING APPROVED OR IN ACCORDANCE WITH APPLICABLE CODES".

ALTERATION OR RE-USE OF THIS DRAWING FOR OTHER THAN THIS PROJECT WITHOUT WRITTEN CONSENT OF THE ABOVE ENGINEER IS PROHIBITED BY LAW.

Client:

RANGER PROPERTIES
4790 BROADWAY
NEW YORK, NY 10034

Arc□itect:

FOGARTY FINGER architecture | interiors

69 Walker St, New York, NY 10013
t 212 966 7450 f 212 966 7444

Li□rary Arc□itect:

Andrew Berman Arc□itect, PLLC
77 C□am□ers Street, 4t□ Floor
New York, NY 10007
Tel 212.22□5998

Structural:

T□ornton Tomasetti
51 Madison Avenue
New York, NY 10010
Tel 917.□□1.7800

MEP / FP:

Concessi Engineering, PC
499 7t□ Avenue, 11t□ Floor Sout□ Tower
New York, NY 10018
Tel 212.□29.□810

FACADE:

SIMPSON G□MPERT□ □ □EGER
550 7t□ Avenue, 10t□ Floor
New York, NY 10018
Tel 212.271.7000

CODE:

METROPOLIS
22 Courtland Street, 10t□ Floor
New York, NY 10007
Tel 212.233.□344

No.	Date	Issue
2	01/29/19	ISSUED FOR PROGRESS
1	01/04/19	ISSUED FOR PROGRESS & COORDINATION

Project:

4790 BROADWAY
NEW YORK, NY 10034

Drawing Title:

MECHANICAL DETAILS SHEET #3 OF 5

Seal □ Signature:

STATE OF NEW YORK · ROBERT L. COPPOLA · No. 86705 · LICENSED PROFESSIONAL ENGINEER

DATE (MM-DD-YY):	11-02-2018
PROJECT No.:	7815.00
DRAWING BY:	SA
CHK BY:	RD/RC
DWG. No.:	M-603.00
CADD FILE No.:	–
	25 OF 27

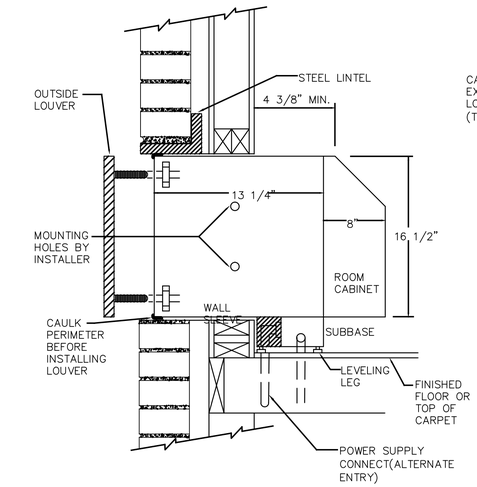

INCREMENTAL A/C UNIT DETAIL

NOT TO SCALE

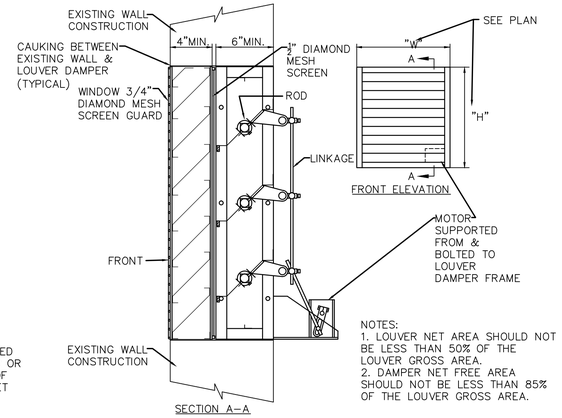

NOTES:
1. LOUVER NET AREA SHOULD NOT BE LESS THAN 50% OF THE LOUVER GROSS AREA.
2. DAMPER NET FREE AREA SHOULD NOT BE LESS THAN 85% OF THE LOUVER GROSS AREA.

MOTORIZED LOUVER DAMPER

NOT TO SCALE

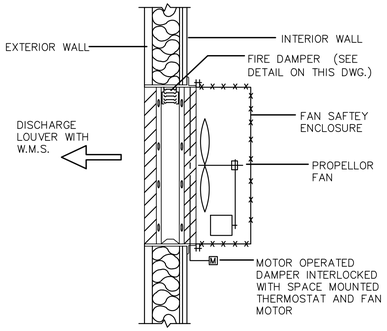

THRU THE WALL FAN DETAIL

NOT TO SCALE

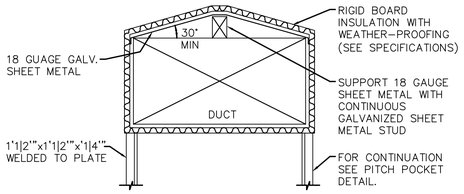

NOTES:
1. DETAIL TYPICAL FOR ALL SUPPLY & RETURN DUCTWORK EXPOSED ON ROOF.
2. FOR ADDITIONAL DUCT SUPPORT INFORMATION REFER TO ROOF DUCTWORK SUPPORT DETAIL.

ROOF DUCTWORK INSULATION DETAIL

NOT TO SCALE

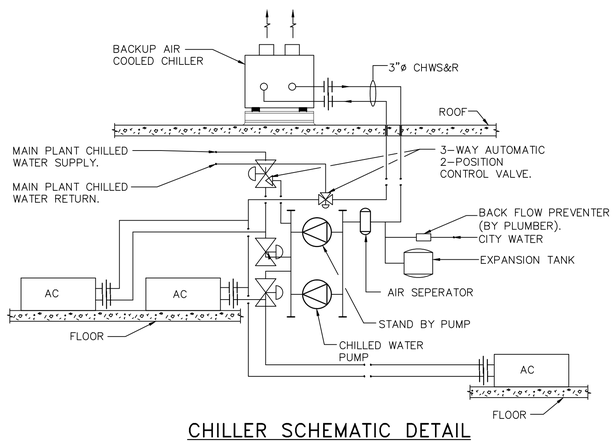

CHILLER SCHEMATIC DETAIL

NOT TO SCALE

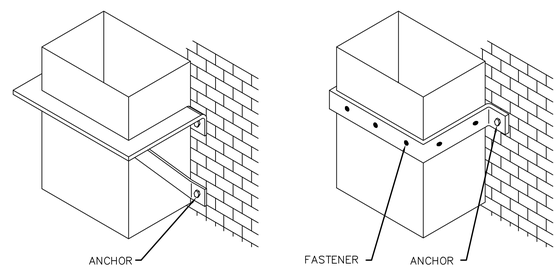

NOTE: DISTANCE BETWEEN DUCT HUNGERS SHALL BE IN ACCORDANCE WITH RS-13-1 OF NEW YORK CITY BUILDING CODE.

DUCTWORK RISER SUPPORTS FROM WALL

NOT TO SCALE

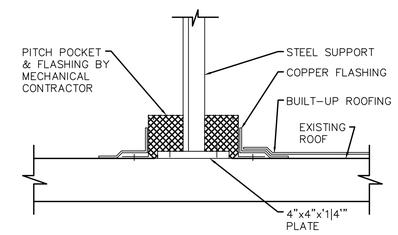

NOTE: CUT & PATCH EXISTING ROOFING AS REQUIRED FOR NEW STEEL DUNNAGE, DUCT SUPPORTS & PIPE SUPPORTS. PATCH EXISTING ROOF TO MATCH EXISTING.

PITCH POCKET DETAIL

NOT TO SCALE

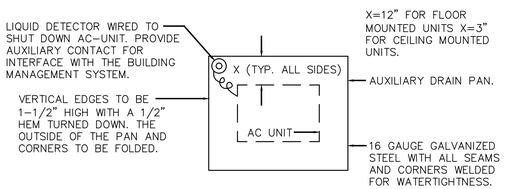

NOTES:
1. THIS DETAIL APPLIES TO:
   -FLOOR MOUNTED OR CEILING HUNG AC-UNITS WITH INTEGRAL CONDENSATE DISCHARGE PUMPS.
   -FLOOR MOUNTED OR CEILING HUNG AC-UNITS WITH GRAVITY FLOW CONDENSATE PIPING.
2. FOR CEILING INSTALLATIONS, SUPPORT AC UNITS AND DRAIN PAN INDEPENDENTLY FROM STRUCTURE OVERHEAD.
3. PITCH DRAIN PAN TO LIQUID DETECTOR. PROVIDE 3/4" PLUGGED DRAIN AT LOW POINT.

A/C UNIT AUXILIARY DRAIN PAN DETAIL

NOT TO SCALE

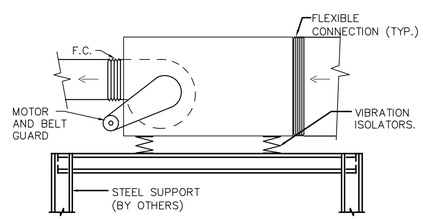

HVAC EQUIPMENT SUPPORT DETAIL

NOT TO SCALE

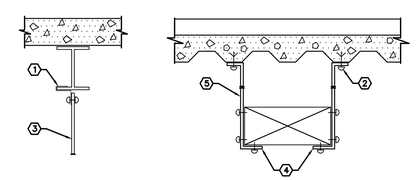

1. BEAM CLIP FOR APPROPRIATE BEAM THICKNESS
2. PHILLIPS JS14C (BSA APPROVAL No.39058 SM)
3. BAND IRON HANGER PER CODE OR SMACNA.
4. TURN UNDER WHEN DUCT IS OVER 47" WIDE.
5. STEEL ROD ('3|8'" MIN.)

METHOD OF HANGING DUCTWORK

NOT TO SCALE

BUILDING DEPARTMENT NOTE: "THIS PLAN IS APPROVED ONLY FOR WORK INDICATED ON THE APPLICATION SPECIFICATION SHEET. ALL OTHER MATTERS SHOWN ARE NOT TO BE RELIED UPON, OR TO BE CONSIDERED AS EITHER BEING APPROVED OR IN ACCORDANCE WITH APPLICABLE CODES".

ALTERATION OR RE-USE OF THIS DRAWING FOR OTHER THAN THIS PROJECT WITHOUT WRITTEN CONSENT OF THE ABOVE ENGINEER IS PROHIBITED BY LAW.

Client:

RANGER PROPERTIES
4790 BROADWAY
NEW YORK, NY 10034

Arc□itect:

FOGARTY FINGER architecture | interiors

69 Walker St, New York, NY 10013
t 212 966 7450 f 212 966 7444

Li□rary Arc□itect:

Andrew Berman Arc□itect, PLLC
77 C□am□ers Street, 4t□ Floor
New York, NY 10007
Tel 212.22□5998

Structural:

T□ornton Tomasetti
51 Madison Avenue
New York, NY 10010
Tel 917.□□1.7800

MEP / FP:

Concessi Engineering, PC
499 7t□ Avenue, 11t□ Floor Sout□ Tower
New York, NY 10018
Tel 212.□29.□810

FACADE:

SIMPSON G□MPERT□ □ □EGER
550 7t□ Avenue, 10t□ Floor
New York, NY 10018
Tel 212.271.7000

CODE:

METROPOLIS
22 Courtland Street, 10t□ Floor
New York, NY 10007
Tel 212.233.□344

No.	Date	Issue
2	01/29/19	ISSUED FOR PROGRESS
1	01/04/19	ISSUED FOR PROGRESS & COORDINATION

Project:

4790 BROADWAY
NEW YORK, NY 10034

Drawing Title:

MECHANICAL DETAILS SHEET #4 OF 5

Seal □ Signature:

STATE OF NEW YORK · ROBERT L. CONGDON · No. 86705 · LICENSED PROFESSIONAL ENGINEER

DATE (MM-DD-YY):	11-02-2018
PROJECT No.:	7815.00
DRAWING BY:	SA
CHK BY:	RD/RC
DWG. No.:	M-604.00
CADD FILE No.:	26 OF 27

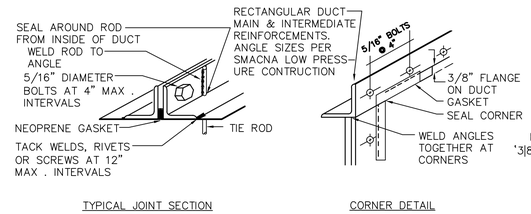

COMPANION ANGLE FLANGED JOINT DETAIL FOR LOW PRESSURE DUCT

NOT TO SCALE

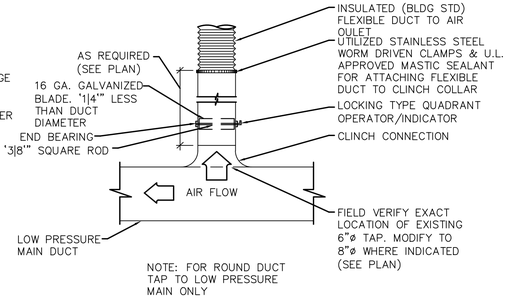

CIRCULAR BRANCH CONNECTION TO SINGLE AIR OUTLET

NOT TO SCALE

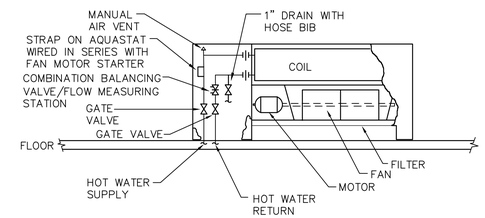

HOT WATER CABINET HEATER DETAIL

NOT TO SCALE

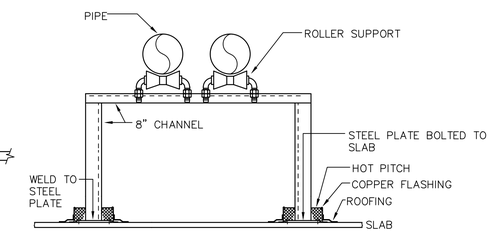

PIPE SUPPORT FROM ROOF

NOT TO SCALE

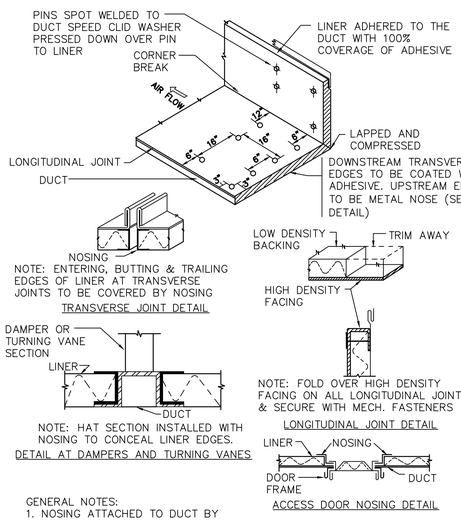

GENERAL NOTES:
1. NOSING ATTACHED TO DUCT BY RIVETS,SCREWS OR WELDS.
2. NOSING: 24 GA. UP TO 48", OVER 48", SAME GA. AS DUCT

ACOUSTICAL DUCT LINER DETAIL

NOT TO SCALE

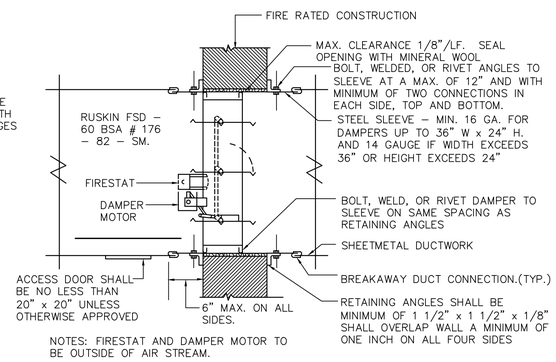

NOTES: FIRESTAT AND DAMPER MOTOR TO BE OUTSIDE OF AIR STREAM.

COMBINATION FIRE AND SMOKE DAMPER DETAIL

NOT TO SCALE

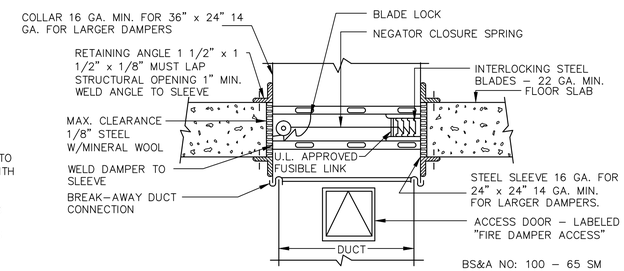

HORIZONTAL FIRE DAMPER DETAIL

NOT TO SCALE

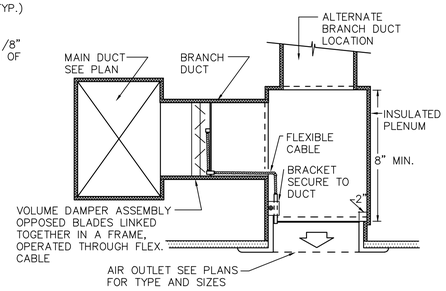

LINEAR DIFFUSER DETAIL

NOT TO SCALE

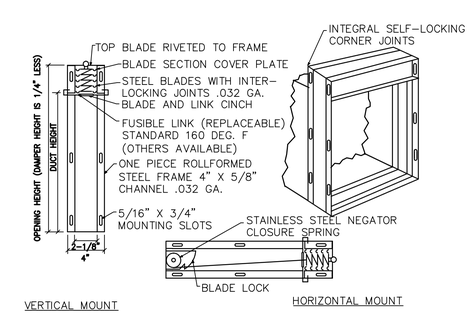

FIRE DAMPER DETAIL

NOT TO SCALE

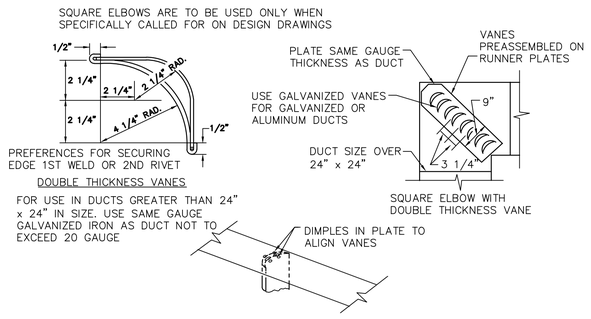

NOTES: USE GALVANIZED STEEL FOR VANES IN EITHER STEEL OR ALUMINUM DUCTWORK. PROVIDE 1 STAY FOR DUCTS 72" TO 120" WIDE & 2 STAYS AT 1/3 POINTS FOR 120" & ABOVE

TURNING VANE DETAIL

NOT TO SCALE

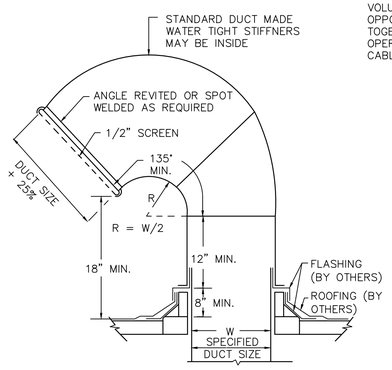

OUTSIDE AIR INTAKE DETAIL

NOT TO SCALE

BUILDING DEPARTMENT NOTE: "THIS PLAN IS APPROVED ONLY FOR WORK INDICATED ON THE APPLICATION SPECIFICATION SHEET. ALL OTHER MATTERS SHOWN ARE NOT TO BE RELIED UPON, OR TO BE CONSIDERED AS EITHER BEING APPROVED OR IN ACCORDANCE WITH APPLICABLE CODES".

ALTERATION OR RE–USE OF THIS DRAWING FOR OTHER THAN THIS PROJECT WITHOUT WRITTEN CONSENT OF THE ABOVE ENGINEER IS PROHIBITED BY LAW.

Client:

RANGER PROPERTIES
4790 BROADWAY
NEW YORK, NY 10034

Arc□itect:

FOGARTY FINGER architecture | interiors

69 Walker St, New York, NY 10013
t 212 966 7450 f 212 966 7444

Li□rary Arc□itect:

Andrew Berman Arc□itect, PLLC
77 C□am□ers Street, 4t□ Floor
New York, NY 10007
Tel 212.22□5998

Structural:

T□ornton Tomasetti
51 Madison Avenue
New York, NY 10010
Tel 917.□□1.7800

MEP / FP:

Concessi Engineering, PC
499 7t□ Avenue, 11t□ Floor Sout□ Tower
New York, NY 10018
Tel 212.□29.□810

FACADE:

SIMPSON G□MPERT□ □ □EGER
550 7t□ Avenue, 10t□ Floor
New York, NY 10018
Tel 212.271.7000

CODE:

METROPOLIS
22 Courtland Street, 10t□ Floor
New York, NY 10007
Tel 212.233.□344

No.	Date	Issue
2	01/29/19	ISSUED FOR PROGRESS
1	01/04/19	ISSUED FOR PROGRESS & COORDINATION

Pro□ect:

4790 BROADWAY
NEW YORK, NY 10034

Drawing Title:

MECHANICAL DETAILS SHEET #5 OF 5

Seal □ Signature:

STATE OF NEW YORK · ROBERT J. CONGER · No. 86705 · LICENSED PROFESSIONAL ENGINEER

DATE (MM–DD–YY):	11–02–2018
PROJECT No.:	7815.00
DRAWING BY:	SA
CHK BY:	RD/RC
DWG. No.:	M–605.00
CADD FILE No.:	–
	27 OF 27

H:\ACAD\AUTOCAD\4790 Broadway Innovat\DESIGN\MECHANICAL\M-601 Details.dwg 2/6/2019 3:37:50 PM

GENERAL NOTES:

1. REFER TO FIRE ALARM FLOOR PLAN FOR EXACT QUANTITY & LOCATIONS OF ALL FIRE ALARM DEVICES.
2. ALL EQUIPMENT AND WIRING SHOWN ON THE FIRE ALARM RISER DIAGRAM IS NEW AND IS BASED ON THE EDWARDS SYSTEMS TECHNOLOGY PLATFORM. THE ELECTRICAL CONTRACTOR SHALL CONTACT DANA FERRER OF EDWARDS SYSTEMS TECHNOLOGY, UTC BUILDING & INDUSTRIAL SYSTEMS, TEL. NO. (860) 284–3432 FOR THE EXACT SPECIFICATIONS OF ALL FIRE ALARM DEVICES AND EQUIPMENT REQUIRED.

SYSTEM TYPE

CLOSED CIRCUIT ELECTRICALLY SUPERVISED AUTOMATIC SMOKE AND SPRINKLER ALARM SYSTEM. (BASED ON BC1968)

FIRE ALARM GENERAL NOTES AND INSTALLATION NOTES

1. NO CONDUITS ARE TO ENTER THE TOP OF ANY TYPE OF FIRE ALARM PANEL.
2. CEILING MOUNTED SMOKE DETECTORS MUST BE MOUNTED AT LEAST 3 FEET FROM SUPPLY AIR REGISTERS.
3. ALL CEILING MOUNTED DEVICES MUST BE SECURELY FASTENED TO THE BUILDING STRUCTURE AND NOT TO CEILING GRID. ALL WALL–MOUNTED DEVICES SHALL BE SECURELY MOUNTED IN PLACE.
4. ALL SMOKE AND SPRINKLER ALARM PANEL, JUNCTION BOX COVERS, ETC. SHALL BE PAINTED "FIRE DEPARTMENT RED".
5. DEVICE LOCATIONS MUST BE READILY ACCESSIBLE TO ALLOW FOR MAINTENANCE AND REPAIR.
6. DUCT MOUNTED SMOKE DETECTORS SHALL BE MOUNTED AND LOCATED ON THE DUCTWORK IN STRICT ACCORDANCE WITH THE MANUFACTURER'S INSTRUCTIONS. ANY DUCT SMOKE DETECTORS MOUNTED ABOVE FINISHED CEILINGS OR IN REMOTE LOCATIONS SHALL BE FURNISHED WITH REMOTE INDICATION LAMP READILY VISIBLE WITHIN SIGHT.
7. THE NYC FIRE DEPARTMENT SHALL APPROVE THE PLANS PRIOR TO START OF ANY WORK.
8. ALL FIRE ALARM EQUIPMENT SHALL HAVE NEW YORK CITY BSA OR MEA ACCEPTANCE NUMBER.
9. ALL WIRING SHALL BE FPLP 150 DEGREE CELSIUS, LABELED "NYC CERTIFIED FIRE ALARM CABLE" AND INSTALLED IN ACCORDANCE WITH NYC. 2008 BUILDING CODE AND DEPARTMENT OF BUILDING TPPN # 4/95. ALL WIRING USED MUST BE OF THE PROPER INSULATION FOR THE TYPE OF SYSTEM BEING INSTALLED AND APPROVED FOR USE IN NYC.
10. ALL WORK SHALL BE DONE IN ACCORDANCE WITH THE LATEST EDITION OF THE NEW YORK CITY BUILDING CODE, AND DEPARTMENT OF BUILDINGS DIRECTIVES, NEW YORK CITY ELECTRICAL CODE, NFPA STANDARDS AND ALL OTHER APPLICABLE CODES AND REGULATIONS.
11. DO NOT RUN FIRE ALARM CABLE IN THE SAME RACEWAY WITH NON FIRE ALARM CABLE.
12. AVOID INSTALLING FIRE ALARM CABLES NEAR SOURCES OF ALTERNATING CURRENT (LIGHTING, POWER, ETC.).
13. OBSERVE ALL POLARITY ON ALL FIRE ALARM CIRCUITS. NO TEE TAPPING IS PERMITTED ON ALARM INDICATING CIRCUITS (HORNS, STROBES, SPEAKERS, ETC.).
14. ALL FIRE ALARM WIRE SHALL BE CLEARLY LABELED IN JUNCTION BOXES AND CABINETS. CONDUCTORS IN CABINETS SHALL BE FORMED SO THAT THEY DROP OFF DIRECTLY OPPOSITE TO ITS TERMINAL CONNECTION. ALL TERMINALS SHALL BE NUMBERED AND LABELED IN EVERY CABINET, JUNCTION BOX, AND CABINET TO BE PAINTED WITH FIRE DEPARTMENT RED.
15. ANY REQUIREMENTS FOR SHIELDING CERTAIN CONDUCTORS OR RUNNING THEM IN SEPARATE RACEWAYS SHALL BE AS RECOMMENDED BY THE FIRE ALARM MANUFACTURERS DOCUMENTATION.
16. ALL WIRING TO BE CHECKED TO INSURE THAT THEY ARE FREE OF ANY OPENS, SHORTS OR GROUNDS.
17. LOCATIONS OF ALL FIRE ALARM EQUIPMENT SHALL BE SUBJECT TO NEW YORK CITY DEPARTMENT OF BUILDING AND FIRE DEPARTMENT APPROVAL. NO CHANGE TO THE SYSTEM OR PLANS SHALL BE PERMITTED WITHOUT WRITTEN APPROVAL FROM THE ENGINEER OF RECORD. IF ANY SUBSTANTIAL CHANGES ARE MADE TO THE DRAWINGS PRIOR TO OR DURING INSTALLATION, AS BUILT PLANS SHALL BE PREPARED BY THE ENGINEER AND FILED WITH THE APPROPRIATE NYC AGENCIES FOR FINAL ACCEPTANCE.
18. ALL FAN SHUTDOWN, DOOR RELEASE, DAMPER CONTROL OR ANY OTHER AUXILIARY RELAYS CONNECTED TO THE FIRE ALARM SHALL BE LOCATED WITHIN THREE (3) FEET OF THE CONTROLLED CIRCUIT OR DEVICE. THE AUXILIARY RELAY SHALL FUNCTION WITHIN THE VOLTAGE AND CURRENT LIMITATION OF THE CONTROL UNIT. THE INSTALLATION WIRING BETWEEN THE FIRE ALARM SYSTEM AND THE AUXILIARY RELAY SHALL BE SUPERVISED OR SHALL OPERATE ON LOSS OF POWER OR A FAIL SAFE MANNER.
19. THE FIRE ALARM SYSTEM SHALL BE PROVIDED WITH BATTERY BACKUP FOR A MINIMUM OF 24 HOURS STANDBY FOLLOWED BY 45 MINUTES OF SYSTEM IN FULL ALARM. SUBMIT CALCULATIONS AS REQUIRED BY CODE.
20. CONTRACTOR SHALL INCLUDE ALL CONDUIT, WIRE AND INSTALLATION IN ACCORDANCE WITH THE FIRE CODE/BLDG. CODE OF 1968.
21. CONTRACTOR SHALL INCLUDE PROVIDING A SIGNED AND SEALED A–433 FORM AND FILE SAME WITH NYC FIRE DEPARTMENT TO OBTAIN AN INSPECTION OF THE FIRE ALARM SYSTEM. IF A LETTER OF DEFECT IS RECEIVED THE CONTRACTOR SHALL CORRECT ALL ITEMS AND REAPPLY TO THE NEW YORK CITY FIRE DEPT. TO OBTAIN A FINAL LETTER OF APPROVAL AT NO ADDITIONAL COST TO THE OWNER.
22. THE SUCCESSFUL FIRE ALARM VENDOR/CONTRACTOR SHALL SUBMIT AS BUILT FIRE ALARM FLOOR PLAN DRAWINGS AND RISER.
23. INSTALLATION SHALL COMPLY WITH 1968 NYC CONSTRUCTION CODE, ELECTRICAL WORK SHALL COMPLY WITH 1 RCNY 4000–06, EQUIPMENT DEVICE USED ARE BY APPROVED MANUFACTURER AND ARE LISTED FOR THEIR USE.

FIRE ALARM SYMBOL LIST

SYMBOL	DESCRIPTION	SYMBOL	DESCRIPTION
F (strobe)	STROBE LIGHT DEVICE, WALL MOUNTED (80" AFF)	F	FIRE ALARM MANUAL PULL STATION, WALL MOUNTED (48" AFF)
F (speaker/strobe)	WALL MOUNTED SPEAKER/STROBE COMBINATION DEVICE (80" AFF)	TS	SPRINKLER TAMPER SWITCH
F (speaker)	WALL MOUNTED SPEAKER DEVICE (80" AFF)	WF	SPRINKLER WATER FLOW SWITCH
H (horn/strobe)	WALL MOUNTED HORN/STROBE COMBINATION DEVICE (80" AFF)	CST	CENTRAL STATION TRANSMITTER
S	CEILING MOUNTED AREA SMOKE DETECTOR	FAR	FAN SHUTDOWN RELAY
S_{EL}	CEILING MOUNTED ELEVATOR LOBBY SMOKE DETECTOR.	R	FIRE ALARM RELAY
$D_{S,R}$	DUCT MOUNTED SMOKE DETECTOR S – SUPPLY, R – RETURN	CR	CARD READER (BY OTHERS)
H	CEILING MOUNTED HEAT DETECTOR	DH	MAGNETIC DOOR HOLDER DEVICE
CO	CARBON MONOXIDE DETECTOR	T	SIGNAL TRANSFORMER (PRI: 120V, SEC: 24V)
FSD	FIRE SMOKE DAMPER, REFER TO MECH. PLANS FOR FURTHER INFORMATION.	——	SOLID THICK LINE INDICATES NEW DEVICE OR WIRING
FACP	FIRE ALARM CONTROL PANEL	——	DOTTED LINE INDICATES EXISTING DEVICE OR WIRING
MFC	MULTIFUNCTION CABINET OR DATA GATHERING PANEL	SDSP	SMOKE DETECTION SPRINKLER ALARM PANEL
RAP	REMOTE ANNUNCIATOR PANEL	AN	FIRE ALARM ANSUL SYSTEM
MM	MONITOR MODULE		
(ground)	GROUND SYSTEM PER CODE LINE SIDE OF COLD WATER SERVICE ENTRANCE, 1#8 GROUND–¾"C TO BUILDING SERVICE GROUND.		

ABBREVIATIONS

AFF	ABOVE FINISHED FLOOR
C	CONDUIT
DGP	DATA GATHERING PANEL
E	EXISTING
EL	EXISTING TO BE LOWERED
ELV	ELEVATOR LOBBY
EMT	ELECTRIC METALLIC TUBING
ER	EXISTING TO BE RELOCATED
FA	FIRE ALARM
FDS	FUSED DISCONNECT SWITCH
G	GROUND
HC	HUNG CEILING
NE	NEW TO REPLACE EXISTING
NTS	NOT TO SCALE
R	REMOVE
RCU	REMOTE COMPUTER UNIT
RE	RELOCATED EXISTING
RGS	RIGID GALVANIZED STEEL
RP	RELOCATED POSITION
UON	UNLESS OTHERWISE NOTED
W	WIRE

FIRE ALARM DRAWING LIST

DWG NO.	TITLE
FA-001.00	FIRE ALARM NOTES, SYMBOLS AND MATRIX
FA-101.00	FIRE ALARM SPECIFICATIONS SHEET #1 OF 3
FA-102.00	FIRE ALARM SPECIFICATIONS SHEET #2 OF 3
FA-103.00	FIRE ALARM SPECIFICATIONS SHEET #3 OF 3
FA-201.00	FIRE ALARM SYSTEM RISER DIAGRAM
FA-300.00	FIRE ALARM CELLAR FLOOR PLAN
FA-301.00	FIRE ALARM GROUND FLOOR PLAN
FA-302.00	FIRE ALARM 2ND FLOOR PLAN
FA-303.00	FIRE ALARM 3RD FLOOR PLAN
FA-304.00	FIRE ALARM 4TH THRU 10TH FLOOR PLAN
FA-305.00	FIRE ALARM 11TH THRU 13THFLOOR PLAN
FA-306.00	FIRE ALARM 14TH FLOOR PLAN
FA-307.00	FIRE ALARM BULKHEAD PLAN
FA-308.00	FIRE ALARM BULKHEAD ROOF PLAN
FA-401.00	FIRE ALARM DETAILS

MATRIX – CLASS R2 SPRINKLER DETECTION SYSTEM

SYSTEM OUTPUTS — INDICATING/CONTROLLED DEVICES; SYSTEM INPUTS — INITIATING DEVICES

	SYSTEM OUTPUTS / SYSTEM INPUTS		CONTROL UNIT ANNUNCIATION					NOTIFICATION							FIRE SAFETY CONTROL	CENTRAL OFFICE NOTIFICATION		
			ACTUATE COMMON ALARM SIGNAL INDICATOR ON LCD OF FIRE ALARM CONTROL PANEL & OUTLYING ANNUNCIATORS.	ACTUATE COMMON SUPERVISORY SIGNAL INDICATOR ON LCD OF FIRE ALARM CONTROL PANEL & ANNUNCIATORS.	ACTUATE COMMON TROUBLE SIGNAL INDICATOR ON LCD OF FIRE ALARM CONTROL PANEL & ANNUNCIATORS.	SOUND INTERNAL BUZZER AT FIRE ALARM CONTROL PANEL & OUTLYING ANNUNCIATORS.	TEXT MESSAGE DISPLAY DEVICE TYPE & LOACATION OF THE ACTIVATING DEVICES ON LCD OF FIRE ALARM CONTROL PANEL & OUTLYING ANNUNCIATORS.	TRANSMIT "PULL STATION ALARM" SIGNAL TO CENTRAL STATION LOCATION VIA TELEPHONE COMPANY LINES.	TRANSMIT "SMOKE ALARM" SIGNAL TO CENTRAL STATION LOCATION VIA TELEPHONE COMPANY LINES.	TRANSMIT "WATERFLOW ALARM" SIGNAL TO CENTRAL STATION LOCATION VIA TELEPHONE COMPANY LINES.	TRANSMIT "SUPERVISORY" SIGNAL TO CENTRAL STATION LOCATION VIA TELEPHONE COMPANY LINES.	TRANSMIT "TROUBLE" SIGNAL TO CENTRAL STATION LOCATION VIA TELEPHONE COMPANY LINES.	ACTIVATE THE OUTLYING RELAYS IN ORDER TO CLOSE ALL FIRE SMOKE DAMPERS	RECALL ELEVATORS TO MAIN EXIT LOBBY FLOOR.	TRANSMIT ALARM SIGNAL	TRANSMIT SUPERVISORY SIGNAL	TRANSMIT TROUBLE SIGNAL	
		FLOORS	A	B	C	D	E	F	G	H	I	J	K	L				
1	MANUAL STATION	CELLAR THROUGH ROOF	x			x	x	x					x					1
2	AREA SMOKE DETECTOR		x			x	x		x				x		x			2
3	HEAT DETECTOR		x	x		x	x		x				x					3
4	AC DUCT DETECTOR		x			x						x	x		x			4
5	CARBON MONOXIDE DETECTOR		x	x		x					x					x		5
6	ELEVATOR MACHINE ROOM/FLOOR ELEVATOR LOBBY DETECTOR(S)/TOP OF ELEVATOR SHAFT DETECTORS		x			x	x		x				x	x	x			6
7	WATERFLOW SWITCH		x			x	x			x			x	x				7
8	SPRINKLER CONTROL VALVE/ TAMPER SWITCH			x		x	x				x					x		8
9	FIRE ALARM AC POWER FAILURE				x	x	x					x				x		9
10	FIRE ALARM SYSTEM LOW BATTERY				x	x	x					x					x	10
11	OPEN CIRCUIT				x	x	x					x					x	11
12	GROUND CIRCUIT				x	x	x					x					x	12
13	NOTIFICATION APPLIANCE CIRCUIT SHORT				x	x	x					x					x	13

BUILDING DEPARTMENT NOTE: "THIS PLAN IS APPROVED ONLY FOR WORK INDICATED ON THE APPLICATION SPECIFICATION SHEET. ALL OTHER MATTERS SHOWN ARE NOT TO BE RELIED UPON, OR TO BE CONSIDERED AS EITHER BEING APPROVED OR IN ACCORDANCE WITH APPLICABLE CODES".

ALTERATION OR RE–USE OF THIS DRAWING FOR OTHER THAN THIS PROJECT WITHOUT WRITTEN CONSENT OF THE ABOVE ENGINEER IS PROHIBITED BY LAW.

Client:
RANGER PROPERTIES
4790 BROADWAY
NEW YORK, NY 10034

Architect:
FOGARTY FINGER architecture | interiors
69 Walker St, New York, NY 10013
t 212 966 7450 f 212 966 7444

Library Architect:
Andrew Berman Architect, PLLC
77 Chambers Street, 4th Floor
New York, NY 10007
Tel 212.226.5998

Structural:
Thornton Tomasetti
51 Madison Avenue
New York, NY 10010
Tel 917.661.7800

MEP / FP:
Concessi Engineering, PC
499 7th Avenue, 11th Floor South Tower
New York, NY 10018
Tel 212.629.6810

FACADE:
SIMPSON GUMPERTZ & HEGER
550 7th Avenue, 10th Floor
New York, NY 10018
Tel 212.271.7000

CODE:
METROPOLIS
22 Courtland Street, 10th Floor
New York, NY 10007
Tel 212.233.6344

No.	Date	Issue
1	02/06/19	ISSUED FOR FILING / DD ESTIMATING

Project:
4790 BROADWAY
NEW YORK, NY 10034

Drawing Title:
FIRE ALARM NOTES, SYMBOLS AND MATRIX

Seal & Signature:

DATE (MM–DD–YY): 11–02–2018
PROJECT No.: 7815.00
DRAWING BY: TB
CHK BY: RC
DWG. No.: FA–001.00
CADD FILE No.: –
01 OF 15

FIRE ALARM SYSTEM SPECIFICATIONS
(2014 NYC BUILDING CODE –
R2 APARTMENT BUILDING SPRINKLER AND SMOKE DETECTION SYSTEM):

PART 1 – GENERAL

1.1 DESCRIPTION

A. THE REQUIREMENTS OF THE CONTRACT DOCUMENTS, INCLUDING THE GENERAL AND SUPPLEMENTARY GENERAL CONDITION AND DIVISION 1 – GENERAL REQUIREMENTS SHALL APPLY TO THE WORK OF THIS SECTION.

B. AT THE TIME OF BID, ALL EXCEPTIONS TAKEN TO THESE SPECIFICATIONS, ALL VARIANCES FROM THESE SPECIFICATION AND ALL SUBSTITUTIONS OF OPERATING CAPABILITIES OR EQUIPMENT CALLED FOR IN THESE SPECIFICATION SHALL BE LISTED IN WRITING AND FORWARDED TO THE ENGINEER. ANY SUCH EXCEPTION, VARIANCES OR SUBSTITUTIONS THAT WERE NOT LISTED AT THE TIME OF BID AND ARE IDENTIFIED IN THE SUBMITTAL, SHALL BE GROUNDS FOR IMMEDIATE DISAPPROVAL WITHOUT COMMENT.

C. THE ENTIRE SYSTEM SHALL BE INSTALLED WITH AESTHETICS IN MIND. ALL CONTROL PANELS AND REMOTE ANNUNCIATORS INSTALLED IN PUBLIC SPACES SHALL BE SEMI–FLUSH MOUNTED WITH NO EXPOSED CONDUIT OR CABLE TRAYS.

1.2 WORK INCLUDED

A. THE WORK COVERED BY THIS SECTION OF THE SPECIFICATION SHALL INCLUDE ALL LABOR, EQUIPMENT, MATERIALS AND SERVICES TO FURNISH AND INSTALL A COMPLETE ADDRESSABLE SPRINKLER AND SMOKE DETECTION SYSTEM. IT SHALL BE COMPLETE WITH ALL NECESSARY HARDWARE, SOFTWARE AND MEMORY SPECIFICALLY TAILORED FOR THIS INSTALLATION. IT SHALL BE POSSIBLE TO PERMANENTLY MODIFY THE SOFTWARE ON SITE BY USING A PLUG–IN PROGRAMMER. THE SYSTEM SHALL CONSIST OF, BUT NOT BE LIMITED TO, THE FOLLOWING:

1. SPRINKLER PANEL AND/OR SMOKE DETECTION SYSTEM.
2. ADDRESSABLE MANUAL FIRE ALARM STATION – ONE LOCATED BY THE SPRINKLER/SMOKE DETECTION SYSTEM. A SECOND SHALL BE LOCATED NEXT TO THE LOBBY REMOTE ANNUNCIATOR, IF PROVIDED.
3. ADDRESSABLE ANALOG AREA SMOKE DETECTORS. SMOKE DETECTOR SHALL BE LOCATED IN EVERY ELECTRICAL, MECHANICAL OR TELEPHONE ROOMS AND OTHER SPACES AS REQUIRED BY NYC CODE CHAPTER 9. BEAM CONSTRUCTION OF > 12 INCHES DEEP SHALL BE ADDRESSED.
4. ADDRESSABLE ANALOG SMOKE DETECTORS FOR THE TOP OF THE ELEVATOR SHAFT, ELEVATOR LOBBIES, AND FOR ELEVATOR EQUIPMENT ROOMS (AS REQUIRED BY NYC CODE CHAPTER 9). PROVIDE ELEVATOR SHUNT TRIP FOR SPRINKLERED ELEVATOR SHAFTS.
5. ADDRESSABLE ANALOG DUCT SMOKE DETECTORS FOR SUPPLY FANS OVER 2,000 CFM. SUPPLY AND RETURN FOR FANS OVER 2,000 CFM.
6. ADDRESSABLE ANALOG HEAT DETECTORS.
7. CENTRAL STATION ALARM CONNECTION CONTROL.
8. AIR HANDLING SYSTEMS SHUTDOWN CONTROL.
9. PUMP SUPERVISION.
10. MAGNETIC DOOR HOLDER RELEASE.
11. DRY PIPE SPRINKLER RELEASE VALVE/DELUGE VALVE CONTROL.
12. SPRINKLER SUPERVISORY SWITCHES AND TAMPER SWITCH SUPERVISION.
13. BATTERY STANDBY.
14. ALL NYC REQUIRED SPRINKLER – SMOKE DETECTION SYSTEM PERIPHERALS, PLACARDS, RISER DIAGRAM, ETC. SHALL BE INCLUDED IN THE SYSTEM PRICE.
15. INCLUDE STAND–ALONE 120 VAC/9VDC SMOKE ALARMS OR COMBINATION SMOKE AND CARBON MONOXIDE (CO) ALARMS FOR SLEEPING ROOMS. SMOKE/CO ALARMS SHALL BE INTERCONNECTED (SOUNDERS WIRED IN TANDEM) WHEN TWO OR MORE ARE IN AN ASSOCIATED APARTMENT.

1.3 APPLICABLE CODES AND STANDARDS

A. ALL EQUIPMENT SHALL BE UL LISTED FOR ITS INTENDED USE AND CONFORM TO THE LATEST UL STANDARDS.

B. UNDERWRITERS LABORATORIES INC.: THE SYSTEM AND ALL COMPONENTS SHALL BE LISTED BY UNDERWRITERS LABORATORIES INC. FOR USE IN FIRE PROTECTIVE SIGNALING SYSTEM UNDER THE FOLLOWING STANDARDS AS APPLICABLE:

UL 864/UOJZ, APOU CONTROL UNITS FOR FIRE PROTECTIVE SIGNALING SYSTEMS.

UL 268SMOKE DETECTORS FOR FIRE PROTECTIVE SIGNALING SYSTEMS.

UL 268A SMOKE DETECTORS FOR DUCT APPLICATIONS.

UL 217SMOKE DETECTORS SINGLE STATION.

UL 521 HEAT DETECTORS FOR FIRE PROTECTIVE SIGNALING SYSTEMS.

UL 228 DOOR HOLDERS FOR FIRE PROTECTIVE SIGNALING SYSTEMS.

UL 464 AUDIBLE SIGNALING APPLIANCES.

UL 1638 VISUAL SIGNALING APPLIANCES.

UL 38 MANUALLY ACT'IVATED SIGNALING BOXES.

UL 346 WATERFLOW INDICATORS FOR FIRE PROTECTIVE SIGNALING SYSTEMS.

UL 1971 STANDARD FOR SIGNALING DEVICES FOR THE HEARING IMPAIRED

UL 1481 POWER SUPPLIES FOR FIRE PROTECTIVE SIGNALING SYSTEMS.

UL 1711 AMPLIFIERS FOR FIRE PROTECTIVE SIGNALING SYSTEMS.

C. THIS INSTALLATION SHALL COMPLY WITH:

1. AMERICANS WITH DISABILITIES ACT (ADA)
2. ALL POWER AND WIRE REQUIREMENTS SHALL FOLLOW THE 2011 NYC ELECTRICAL CODE.
3. NATIONAL FIRE PROTECTION ASSOCIATION STANDARDS: NFPA 72 AS AMENDED BY NYC CODE APPENDIX Q.
4. 2014 NYC BUILDING CODE CHAPTER 4, CHAPTER 9, CHAPTER 10, CHAPTER 30, MECHANICAL CODE, APPENDIX K & Q AND OTHER SECTIONS AS THEY APPLY.
5. INTERNATIONAL STANDARDS ORGANIZATION (ISO): ISO–9001
6. UTILIZE MEA/BSA/OTCR APPROVED FIRE ALARM EQUIPMENT.
7. THE REQUIREMENTS OF THE CITY OF NEW YORK BUILDING DEPARTMENT AND THE CITY OF NEW YORK FIRE DEPARTMENT.
8. LOCAL AND STATE BUILDING CODES AND THE LOCAL AUTHORITIES HAVING JURISDICTION.

1.4 RELATED DOCUMENTS

A. SECURE PERMITS AND APPROVALS PRIOR TO INSTALLATION.

B. PRIOR TO COMMENCEMENT AND AFTER COMPLETION OF WORK NOTIFY AUTHORITIES HAVING JURISDICTION.

C. SUBMIT LETTER OF APPROVAL FOR INSTALLATION BEFORE REQUESTING ACCEPTANCE OF SYSTEM.

1.5 RELATED WORK

A. THE CONTRACTOR SHALL COORDINATE WORK IN THIS SECTION WITH ALL RELATED TRADES. WORK AND/OR EQUIPMENT PROVIDED IN OTHER SECTIONS AND RELATED TO THE ALARM SYSTEM SHALL INCLUDE, BUT NOT BE LIMITED TO:

1. SPRINKLER WATERFLOW AND SUPERVISORY SWITCHES SHALL BE FURNISHED AND INSTALLED BY THE PLUMBING CONTRACTOR, BUT WIRED AND CONNECTED BY THE ELECTRICAL CONTRACTOR. MODIFICATION OF EXISTING SPRINKLER DEVICES TO ACCOMMODATE MONITORING BY THE NEW SPRINKLER SYSTEM SHALL BE THE RESPONSIBILITY OF THE ALARM SYSTEM INSTALLING CONTRACTOR.
2. DUCT SMOKE DETECTORS SHALL BE FURNISHED, WIRED AND CONNECTED BY THE ELECTRICAL CONTRACTOR. THE HVAC CONTRACTOR SHALL FURNISH NECESSARY DUCT OPENING TO INSTALL THE DUCT SMOKE DETECTORS.
3. NEW AIR HANDLING AND SMOKE EXHAUST SYSTEM FAN CONTROL CIRCUITS AND STATUS CONTACTS TO BE BY THE HVAC CONTROL EQUIPMENT.
4. ELEVATOR RECALL CONTROL CIRCUITS TO BE PROVIDED BY THE ELEVATOR CONTROL EQUIPMENT. THE OPERATION OF THE ELEVATORS SHALL BE IN ACCORDANCE WITH NYC CODE CHAPTER 9 AND 30 AS WELL AS APPENDIX Q AND K.
5. DRY PIPE/DELUGE SPRINKLER SYSTEM RELEASE VALVE CONTROL CIRCUITS AND SUPERVISION CONTACTS SHALL BE PROVIDED BY THE DRY PIPE/DELUGE SPRINKLER SYSTEM CONTROL EQUIPMENT.
6. CONDUIT: SECTION 260533.
7. WIRE AND CABLES: SECTION 260519.

1.6 SUBMITTALS

A. PROVIDE LIST OF ALL TYPES OF EQUIPMENT AND COMPONENTS PROVIDED. THIS SHALL BE INCORPORATED AS PART OF A TABLE OF CONTENTS, WHICH WILL ALSO INDICATE THE MANUFACTURER'S PART NUMBER, THE DESCRIPTION OF THE PART, AND THE PART NUMBER OF THE MANUFACTURER'S PRODUCT DATASHEET ON WHICH THE INFORMATION CAN BE FOUND.

B. PROVIDE DESCRIPTION OF OPERATION OF THE SYSTEM (SEQUENCE OF OPERATION), SIMILAR TO THAT PROVIDED IN PART 2 OF THIS SECTION OF THE SPECIFICATIONS, TO INCLUDE ANY AND ALL EXCEPTIONS, VARIANCES OR SUBSTITUTIONS LISTED AT THE TIME OF BID. ANY SUCH EXCEPTIONS, VARIANCES OR SUBSTITUTIONS THAT WERE NOT LISTED AT THE TIME OF BID AND ARE IDENTIFIED IN THE SUBMITTAL, SHALL BE GROUNDS FOR IMMEDIATE DISAPPROVAL WITHOUT COMMENT. THE SEQUENCE OF OPERATION SHALL BE PROJECT SPECIFIC, AND SHALL PROVIDE INDIVIDUAL SEQUENCES FOR EVERY TYPE OF ALARM, SUPERVISORY, OR TROUBLE CONDITION THAT MAY OCCUR AS PART OF NORMAL OR OFF–NORMAL SYSTEM USE.

C. PROVIDE MANUFACTURER'S PRINTED PRODUCT DATA, CATALOG CUTS AND DESCRIPTION OF ANY SPECIAL INSTALLATION PROCEDURES. POORLY PHOTOCOPIED AND/OR ILLEGIBLE PRODUCT DATA SHEETS SHALL NOT BE ACCEPTABLE AND SHALL BE REJECTED. ALL PRODUCT DATASHEETS SHALL BE HIGHLIGHTED OR STAMPED WITH ARROWS TO INDICATE THE SPECIFIC COMPONENTS BEING SUBMITTED FOR APPROVAL.

D. PROVIDE MANUFACTURER'S INSTALLATION INSTRUCTION MANUAL FOR SPECIFIED SYSTEM.

E. PROVIDE SAMPLES OF VARIOUS ITEMS WHEN REQUESTED.

F. PROVIDE COPY OF NYS LICENSE TO PERFORM SUCH WORK.

G. PROVIDE COPIES OF NICET LEVEL II FIRE ALARM CERTIFICATIONS FOR THE TWO (2) TECHNICIANS ASSIGNED TO THIS PROJECT.

H. PROVIDE SHOP DRAWINGS AS FOLLOWS:

1. COVERSHEET WITH PROJECT NAME, ADDRESS AND DRAWING INDEX.
2. GENERAL NOTES DRAWING WITH PERIPHERAL DEVICE BACKBOX SIZE INFORMATION, PART NUMBERS, DEVICE MOUNTING HEIGHT INFORMATION, AND THE NAMES, ADDRESSES, POINT OF CONTACT, AND TELEPHONE NUMBERS OF ALL CONTRACT PROJECT TEAM MEMBERS.
3. DEVICE RISER DIAGRAM THAT INDIVIDUALLY DEPICTS ALL CONTROL PANELS, ANNUNCIATORS, ADDRESSABLE DEVICES. SHALL INCLUDE A SPECIFIC, PROPOSED POINT DESCRIPTOR ABOVE EACH ADDRESSABLE DEVICE. SHALL INCLUDE A SPECIFIC, DISCRETE POINT ADDRESS THAT SHALL CORRESPOND TO ADDRESSES DEPICTED ON THE DEVICE LAYOUT FLOOR PLANS. DRAWING SHALL PROVIDE WIRE SPECIFICATIONS, AND WIRE TAGS SHOWN ON ALL CONDUCTORS DEPICTED ON THE RISER DIAGRAM. ALL CIRCUITS SHALL HAVE DESIGNATIONS THAT SHALL CORRESPOND WITH THOSE REQUIRE ON THE CONTROL PANEL AND FLOOR PLAN DRAWINGS. END–OF–LINE RESISTORS (AND VALUES) SHALL BE DEPICTED.
4. CONTROL PANEL TERMINATION DRAWING(S). SHALL DEPICT INTERNAL COMPONENT PLACEMENT AND ALL INTERNAL AND FIELD TERMINATION POINTS. DRAWING SHALL PROVIDE A DETAIL INDICATING WHERE CONDUIT PENETRATIONS SHALL BE MADE, SO AS TO AVOID CONFLICTS WITH INTERNALLY MOUNTED BATTERIES. FOR EACH ADDITIONAL DATA GATHERING PANEL, A SEPARATE CONTROL PANEL DRAWING SHALL BE PROVIDED, WHICH CLEARLY INDICATED THE DESIGNATION, SERVICE AND LOCATION OF THE CONTROL ENCLOSURE. END–OF–LINE RESISTORS (AND VALUES) SHALL BE DEPICTED.
5. SEE SECTION 3.4 DOCUMENTATION AND TRAINING FOR OTHER DOCUMENTS RELATING TO THIS SECTION.
6. DEVICE TYPICAL WIRING DIAGRAM DRAWING(S) SHALL BE PROVIDED WHICH DEPICT ALL SYSTEM COMPONENTS, AND THEIR RESPECTIVE FIELD WIRING TERMINATION POINTS. WIRE TYPE, GAUGE, AND JACKET SHALL ALSO BE INDICATED. WHEN AN ADDRESSABLE MODULE IS USED IN MULTIPLE CONFIGURATIONS FOR MONITORING OR CONTROLLING VARIOUS TYPES OF EQUIPMENT, DIFFERENT DEVICE TYPICAL DIAGRAMS SHALL BE PROVIDED. END–OF–LINE RESISTORS (AND VALUES) SHALL BE DEPICTED.
7. DEVICE LAYOUT FLOOR PLANS SHALL BE CREATED FOR EVERY AREA SERVED BY THE ALARM SYSTEM. CAD FILES (AUTOCAD – LATEST VERSION) SHALL BE PROVIDED BY THE CONSULTING ENGINEER FOR THE USE OF THE ALARM SYSTEM EQUIPMENT VENDOR IN THE PREPARATION OF THE FLOOR PLANS. FLOOR PLANS SHALL INDICATE ACCURATE LOCATIONS FOR ALL CONTROL AND PERIPHERAL DEVICES. DRAWINGS SHALL BE NO LESS THAN 1/8 INCH SCALE. ALL ADDRESSABLE DEVICES SHALL BE DEPICTED WITH A DISCRETE ADDRESS THAT CORRESPONDS WITH THAT INDICATED ON THE RISER DIAGRAM. ALL NOTIFICATION APPLIANCES SHALL ALSO BE PROVIDED WITH A CIRCUIT ADDRESS THAT CORRESPONDS TO THAT DEPICTED ON THE RISER DIAGRAM. IF INDIVIDUAL FLOORS NEED TO BE SEGMENTED TO ACCOMMODATE THE 1/8" SCALE REQUIREMENTS, KEY PLANS AND BREAK–LINES SHALL BE PROVIDED ON THE PLANS IN AN ORDERLY AND PROFESSIONAL MANNER. END–OF–LINE RESISTORS (AND VALUES) SHALL BE DEPICTED.
8. CONTAINED IN THE TITLE BLOCK OF EACH DRAWING SHALL BE SYMBOL LEGENDS WITH DEVICE COUNTS, WIRE TAG LEGENDS, CIRCUIT SCHEDULES FOR ALL ADDRESSABLE AND NOTIFICATION APPLIANCE CIRCUITS, THE PROJECT NAME/ADDRESS, AND A DRAWING DESCRIPTION WHICH CORRESPONDS TO THAT INDICATED IN THE DRAWING INDEX ON THE COVERSHEET DRAWING. A SECTION OF EACH DRAWING TITLE BLOCK SHALL BE RESERVED FOR REVISION NUMBERS AND NOTES. THE INITIAL SUBMISSION SHALL BE REVISION 0, WITH REVISION A, B, OR C AS PROJECT MODIFICATIONS REQUIRE.

I. BATTERY CALCULATIONS SHALL BE PROVIDED ON A PER POWER SUPPLY/CHARGER BASIS BASED ON 24 HOURS OF SUPERVISION AND 15 MINUTES OF ALARM. THESE CALCULATIONS SHALL CLEARLY INDICATE THE QUANTITY OF DEVICES, THE DEVICE PART NUMBERS, THE SUPERVISORY CURRENT DRAW, THE ALARM CURRENT DRAW, TOTALS FOR ALL CATEGORIES, AND THE CALCULATED BATTERY REQUIREMENTS. BATTERY CALCULATIONS SHALL ALSO REFLECT ALL CONTROL PANEL COMPONENT, REMOTE ANNUNCIATOR, AND AUXILIARY RELAY CURRENT DRAWS. FAILURE TO PROVIDE THESE CALCULATIONS SHALL BE GROUNDS FOR THE COMPLETE REJECTION OF THE SUBMITTAL PACKAGE.

J. TABLE OF CONTENTS, PRODUCT DATA SHEETS, SEQUENCES OF OPERATION, BATTERY CALCULATIONS, INSTALLATION INSTRUCTIONS, LICENSES, NICET CERTIFICATIONS AND B–SIZE (BLACKLINE) REDUCED SHOP DRAWINGS SHALL BE PROVIDED BY THE ALARM VENDOR AS PART OF A SINGLE, SPIRAL BOUND SUBMITTAL BOOK. THE SUBMITTAL BOOK SHALL HAVE LAMINATED COVERS INDICATING THE PROJECT ADDRESS, PROJECT NUMBER, SYSTEM TYPE, AND CONTRACTOR. THE BOOK SHALL CONSIST OF LABELED DIVIDERS, AND SHALL NOT EXCEED 9 ½" IN WIDTH, AND 11 ½" IN HEIGHT. NO LESS THAN THREE (3) SETS OF SUBMITTAL BOOKLETS SHALL BE PROVIDED TO THE CONSULTING ENGINEER FOR REVIEW AND COMMENT. ADDITIONAL COPIES MAY BE REQUIRED AT NO ADDITIONAL COST TO THE PROJECT.

K. SCALE DRAWING SETS SHALL BE SUBMITTED ALONG WITH THE SUBMITTAL BOOKLETS. THESE DRAWINGS MAY BE EITHER D–SIZE OR E–SIZE BLUELINE DRAWINGS AND OF A SUFFICIENT RESOLUTION TO BE COMPLETELY READ. SETS SHALL BE BOUND AND FOLDED SO AS TO NOT TAKE UP MORE THAN 100 SQUARE INCHES OF SPACE. NO LESS THAN THREE (3) SETS OF SCALE DRAWING SETS SHALL BE PROVIDED TO THE CONSULTING ENGINEER FOR REVIEW AND COMMENT. ADDITIONAL COPIES MAY BE REQUIRED AT NO ADDITIONAL COST TO THE PROJECT.

1.7 WARRANTY

A. ALL WORK PERFORMED AND ALL MATERIAL AND EQUIPMENT FURNISHED UNDER THIS CONTRACT SHALL BE FREE FROM DEFECTS AND SHALL REMAIN SO FOR A PERIOD OF AT LEAST ONE (1) YEAR FROM THE DATE OF ACCEPTANCE OR APPROVAL BY AHJ. THE FULL COST OF MAINTENANCE, LABOR AND MATERIALS REQUIRED TO CORRECT ANY DEFECT DURING THIS ONE YEAR PERIOD SHALL BE INCLUDED IN THE SUBMITTAL BID.

PART II – PRODUCTS

2.1 ACCEPTABLE MANUFACTURERS

THE CATALOG NUMBERS USED ARE THOSE OF EDWARDS EST BY UTC FIRE AND SECURITY "OR EQUAL", AND CONSTITUTE THE TYPE AND QUALITY OF EQUIPMENT TO BE FURNISHED. FOR A LIST OF EDWARDS EST AUTHORIZED FIRE ALARM VENDORS, CONTACT DANA FERRER AT UTC FIRE AND SECURITY AT DANA.FERRER@FS.UTC.COM.

B. IF EQUIPMENT OF ANOTHER MANUFACTURER IS TO BE SUBMITTED FOR APPROVAL AS EQUAL, THE CONTRACTOR SHALL, AT THE TIME OF BID, LIST ALL EXCEPTIONS TAKEN TO THESE SPECIFICATIONS, ALL VARIANCES FROM THESE SPECIFICATIONS AND ALL SUBSTITUTIONS OF OPERATING CAPABILITIES OR EQUIPMENT CALLED FOR IN THESE SPECIFICATIONS AND FORWARD SAID LIST TO THE ENGINEER. ANY SUCH EXCEPTIONS, VARIANCES OR SUBSTITUTIONS THAT WERE NOT LISTED AT THE TIME OF BID AND ARE IDENTIFIED IN THE SUBMITTAL, SHALL BE GROUNDS FOR IMMEDIATE DISAPPROVAL WITHOUT COMMENT. FINAL DETERMINATION OF COMPLIANCE WITH THESE SPECIFICATIONS SHALL REST WITH THE ENGINEER, WHO, AT HIS DISCRETION, MAY REQUIRE PROOF OF PERFORMANCE.

C. ALTERNATE PRODUCT SUBMISSIONS MADE WITHOUT PROOF OF NO LESS THAN THREE (3) FACTORY AUTHORIZED AND CERTIFIED MANUFACTURER'S DISTRIBUTORS RESIDING WITHIN 50 MILES OF THE PROJECT JOB SITE SHALL BE REJECTED. THESE DISTRIBUTORS MUST NOT ONLY PROVIDE INSTALLATION SUPPORT, BUT MUST HAVE A SERVICE ORGANIZATION CAPABLE OF 24 HOUR EMERGENCY CALL SERVICE AND MUST HAVE BEEN CONTRACTED AND DELIVERED NO LESS THAN FIVE (5) ACCEPTED PROJECTS USING THE SUBMITTED PRODUCT OVER THE PAST YEAR.

D. ALTERNATE PRODUCT SUBMISSIONS BASED UPON USE OF A PRODUCT LINE CONSIDERED PROPRIETARY IN ITS DISTRIBUTION, DESIGN, APPLICATION SOFTWARE, OR ONGOING MAINTENANCE AND REPAIR SHALL NOT ACCEPTABLE. PROOF OF A PRODUCT'S NON–PROPRIETARY NATURE SHALL BE THE BURDEN OF THE CONTRACTOR AT THE TIME OF BID, AND SHALL BE IN THE FORM OF WRITTEN DOCUMENTATION. THE DETERMINATION OF A PRODUCT'S COMPLIANCE TO THIS REQUIREMENT SHALL BE EXCLUSIVELY THAT OF THE CONSULTING ENGINEER.

F. ALL PRODUCTS USED SHALL BE OF A SINGLE MANUFACTURER. SUBMISSION OF NOTIFICATION APPLIANCES, AUXILIARY RELAYS, OR DOCUMENTATION FROM OTHER THAN A SINGLE MANUFACTURER SHALL NOT BE ACCEPTABLE AND WILL BE GROUNDS FOR IMMEDIATE DISAPPROVAL WITHOUT COMMENT.

G. THE SPRINKLER / SMOKE DETECTION SYSTEM SUPPLIED UNDER THIS SPECIFICATION SHALL BE A MICROPROCESSOR–BASED. ALL CONTROL PANEL ASSEMBLIES AND CONNECTED FIELD APPLIANCES SHALL BE BOTH DESIGNED AND MANUFACTURED BY THE SAME COMPANY, AND SHALL BE TESTED AND CROSS–LISTED AS COMPATIBLE TO ENSURE THAT A FULLY FUNCTIONING LIFE SAFETY SYSTEM IS DESIGNED AND INSTALLED.

2.2 CIRCUITING GUIDELINES

A. EACH SIGNALING LINE CIRCUIT (SLC) SHALL BE CIRCUITED SO DEVICE LOADING IS NOT TO EXCEED 80% OF LOOP CAPACITY IN ORDER TO LEAVE FOR SPACE FOR FUTURE DEVICES. THE LOOP SHALL HAVE CLASS B OPERATION.

B. NAC CIRCUITS SHALL HAVE CLASS B OPERATION. EACH OF THE FOLLOWING TYPES OF ALARM NOTIFICATION APPLIANCES SHALL BE CIRCUITED AS SHOWN ON THE DRAWINGS BUT SHALL BE TYPICALLY AS FOLLOWS:

a. AUDIBLE SIGNALS: PROVIDE SUFFICIENT SPARE CAPACITY TO ASSURE THAT THE ADDITION OF FIVE (5) AUDIBLE DEVICES CAN BE SUPPORTED WITHOUT THE NEED FOR ADDITION CONTROL COMPONENTS (POWER SUPPLIES, SIGNAL CIRCUIT MODULES, AMPLIFIERS, BATTERIES, ETC.)
b. VISUAL SIGNALS PROVIDE SUFFICIENT SPARE CAPACITY TO ASSURE THAT THE ADDITION OF THREE (3) VISUAL DEVICES CAN BE SUPPORTED WITHOUT THE NEED FOR ADDITION CONTROL COMPONENTS (POWER SUPPLIES, SIGNAL CIRCUIT MODULES, BATTERIES, ETC.)
c. DWELLING SPEAKER CIRCUITS SHALL BE CLASS A (STYLE Z).

C. THE NETWORK RISER SHALL BE WIRED NFPA STYLE 7 (CLASS A WITH ISOLATION).

D. WHERE IT IS NECESSARY TO INTERFACE CONVENTIONAL INITIATING DEVICES PROVIDE INTELLIGENT INPUT MODULES TO SUPERVISE CLASS B ZONE WIRING.

E. EACH OF THE FOLLOWING TYPES OF DEVICES OR EQUIPMENT SHALL BE PROVIDED WITH SUPERVISED CIRCUITS AS SHOWN ON THE DRAWINGS BUT SHALL BE TYPICALLY AS FOLLOWS:

a. SPRINKLER VALVE SUPERVISORY SWITCHES: PROVIDE ONE (1) SUPERVISORY MODULE CIRCUIT FOR EACH SPRINKLER VALVE SUPERVISORY SWITCH.
b. WHEN WATERFLOW AND TAMPER SWITCHES EXIST AT THE SAME LOCATION, PROVIDE ONE (1) DUAL INPUT ADDRESSABLE MODULE. WHEN ODD NUMBERS OF DEVICES EXIST AT A SINGLE LOCATION, PROVIDE ADDITIONAL SINGLE INPUT ADDRESSABLE MODULES.

F. EACH OF THE FOLLOWING TYPES OF REMOTE EQUIPMENT ASSOCIATED WITH THE FIRE ALARM SYSTEM SHALL BE PROVIDED WITH A FORM 'C' CONTROL RELAY CONTACT AS SHOWN ON THE DRAWINGS, BUT SHALL BE TYPICALLY AS FOLLOWS:

a. HVAC FAN SYSTEMS: PROVIDE ONE (1) SHUTDOWN CONTROL RELAY CONTACT FOR EACH HVAC FAN SYSTEM.
b. HVAC SUPPLY FANS: PROVIDE ONE (1) SHUTDOWN CONTROL RELAY CONTACT FOR EACH HVAC SUPPLY FAN.
c. HVAC RETURN FANS: PROVIDE ONE (1) SHUTDOWN CONTROL RELAY CONTACT FOR EACH HVAC RETURN FAN.

G. PROVIDE A DEDICATED 24VDC CIRCUIT TO FEED ALL AUXILIARY RELAYS REQUIRED FOR INDUCTIVE LOADS. CIRCUITS SHALL BE SUPERVISED VIA AN END–OF–LINE RELAY AND ADDRESSABLE INPUT MODULE. AUXILIARY RELAYS SHALL NOT DERIVE THEIR POWER FROM THE STARTER OR LOAD BEING CONTROLLED.

H. EACH CONTROL OR DATA GATHERING PANEL SHALL HAVE A DEDICATED MINIMUM 20AMP–120VAC FEED. AN APPROPRIATE FUSE DISCONNECT SHALL BE INCLUDED, WIRED AS INDICATED IN THE ELECTRICAL CODE FOR THE CITY OF NY.

I. IN NO CASE SHALL ANY FIRE ALARM CIRCUIT BE SIZED BEYOND 80% OF CIRCUIT CAPACITY.

2.3 SPRINKLER PANEL – SMOKE DETECTION SYSTEM SEQUENCE OF OPERATION

A. ACTIVATION OF THE MANUAL PULL STATION LOCATED AT THE SPRINKLER ALARM PANEL WILL DO THE FOLLOWING:

a. ANNUNCIATE THE DEVICE IN ALARM ON AN ENGLISH LANGUAGE DISPLAY AT THE SPRINKLER ALARM PANEL
b. CLOSE ALL DAMPERS
c. SEND AN ALARM SIGNAL TO CENTRAL OFFICE

B. ACTIVATION OF AN AREA SMOKE OR DUCT DETECTOR WILL DO THE FOLLOWING:

a. ANNUNCIATE THE DEVICE IN ALARM ON AN ENGLISH LANGUAGE DISPLAY AT THE SPRINKLER ALARM PANEL
b. SHUTDOWN ALL FANS GREATER THAN 2000 C.F.M.
c. CLOSE ALL DAMPERS
d. SEND A SMOKE ALARM SIGNAL TO CENTRAL OFFICE

C. ACTIVATION OF AN ELEVATOR SMOKE DETECTOR WILL DO THE FOLLOWING:

a. ANNUNCIATE THE DEVICE IN ALARM ON AN ENGLISH LANGUAGE DISPLAY AT THE SPRINKLER ALARM PANEL
b. SHUTDOWN ALL FANS GREATER THAN 2000 C.F.M.
c. CLOSE ALL DAMPERS
d. SEND A SMOKE ALARM SIGNAL TO CENTRAL OFFICE
e. RECALL THE ELEVATOR TO THE GROUND FLOOR

D. OPERATION OF A ELEVATOR MACHINE ROOM OR TOP OF SHAFT HEAT DETECTOR WILL DO THE FOLLOWING:

a. SHUNT TRIP THE ELEVATORS COVERED BY THIS EQUIPMENT AFTER THE ELEVATOR RETURNS AND REACHES THE GROUND FLOOR.
b. CLOSE ALL DAMPERS.

E. ACTIVATION OF A WATERFLOW SWITCH WILL DO THE FOLLOWING:

a. ANNUNCIATE THE DEVICE IN ALARM ON AN ENGLISH LANGUAGE DISPLAY AT THE SPRINKLER ALARM PANEL
b. SHUTDOWN ALL FANS GREATER THAN 2000 C.F.M.
c. CLOSE ALL DAMPERS
d. SEND A WATERFLOW ALARM SIGNAL TO CENTRAL OFFICE
e. RECALL THE ELEVATOR TO THE GROUND FLOOR

F. ACTIVATION OF A TAMPER SWITCH WILL DO THE FOLLOWING:

a. ANNUNCIATE THE DEVICE IN ALARM ON AN ENGLISH LANGUAGE DISPLAY AT THE SPRINKLER ALARM PANEL
b. SEND A SUPERVISORY SIGNAL TO CENTRAL OFFICE

G. ACTIVATION OF A ROOM SMOKE ALARM, CO ALARM, OR COMBINATION CO/SMOKE ALARM WILL DO THE FOLLOWING:

a. ACTIVATE THE LOCAL INTERNAL SOUNDER
b. SEND A SIGNAL TO OTHER ALARMS IN THE SAME DWELLING AND ACTIVATE THEIR ASSOCIATED INTERNAL SOUNDER

H. OPERATION OF A HANDICAP SLEEPING ROOM SMOKE ALARM OR SMOKE AND CO ALARM WILL DO THE FOLLOWING:

a. ACTIVATE THE LOCAL INTERNAL SOUNDER
b. SEND A SIGNAL TO OTHER ALARMS IN THE SAME DWELLING AND ACTIVATE THEIR ASSOCIATED INTERNAL SOUNDER
c. ACTIVATE THE DWELLING ROOM STROBES

I. OPERATION OF A GENERAL TROUBLE I.E.: OPEN ON FIELD WIRING INTERNAL FAULTS:

a. ACTIVATE LOCAL PIEZO AT THE SPRINKLER ALARM PANEL AND REMOTE ANNUNCIATOR AND SHOW ALPHANUMERIC TEXT MESSAGE ON LCD DISPLAYS.
b. TRANSMIT TROUBLE SIGNAL TO CENTRAL OFFICE VIA CENTRAL OFFICE TRANSMITTER.

J. OPERATION OF A FIRE PUMP MONITORING DEVICE SHALL:

a. PHASE REVERSAL: DISPLAY A TROUBLE CONDITION WITH A "FIRE PUMP PHASE REVERSAL" MESSAGE AT THE SPRINKLER ALARM PANEL LCD DISPLAY.
b. PUMP RUNNING: DISPLAY A TROUBLE CONDITION WITH A "FIRE PUMP RUNNING" MESSAGE AT THE SPRINKLER ALARM PANEL LCD DISPLAY.
c. PUMP FAIL/TROUBLE: DISPLAY A TROUBLE CONDITION WITH A "PUMP TROUBLE" MESSAGE AT THE SPRINKLER ALARM PANEL LCD DISPLAY.

2.4 SUPPORT FOR INSTALLER AND OWNER MAINTENANCE

A. PROVIDE A CODED ONE–MAN WALK TEST FEATURE. ALLOW AUDIBLE OR SILENT TESTING. SIGNAL ALARMS AND TROUBLES DURING TEST. ALLOW RECEIPT OF ALARMS AND PROGRAMMED OPERATIONS FOR ALARMS FROM AREAS NOT UNDER TEST.

B. PROVIDE INTERNAL SYSTEM DIAGNOSTICS AND MAINTENANCE USER INTERFACE CONTROLS TO DISPLAY/REPORT THE POWER, COMMUNICATION, AND GENERAL STATUS OF SPECIFIC PANEL COMPONENTS, DETECTORS, AND MODULES.

C. PROVIDE LOOP CONTROLLER DIAGNOSTICS TO IDENTIFY COMMON ALARM, TROUBLE, GROUND FAULT, CLASS A FAULT, AND MAP FAULTS. MAP FAULTS INCLUDE WIRE CHANGES, DEVICE TYPE CHANGES BY LOCATION, DEVICE ADDITIONS/DELETIONS AND CONVENTIONAL OPEN, SHORT, AND GROUND CONDITIONS. GROUND FAULTS ON THE CIRCUIT WIRING OF REMOTE MODULE SHALL BE IDENTIFIED BY DEVICE ADDRESS.

D. ALLOW THE USER TO DISPLAY/REPORT THE CONDITION OF ADDRESSABLE ANALOG DETECTORS. INCLUDE DEVICE ADDRESS, DEVICE TYPE, PERCENT OBSCURATION, AND MAINTENANCE INDICATOR. THE MAINTENANCE INDICATOR SHALL PROVIDE THE USER WITH A MEASURE OF CONTAMINATION OF A DEVICE UPON WHICH CLEANING DECISIONS CAN CONFIDENTLY BE MADE.

E. ALLOW THE USER TO REPORT HISTORY FOR ALARM, SUPERVISORY, MONITOR, TROUBLE, SMOKE VERIFICATION, WATCHDOG, AND RESTORE ACTIVITY. INCLUDE FACILITY NAME, LICENSEE, PROJECT PROGRAM COMPILATION DATE, COMPILER VERSION, PROJECT REVISION NUMBER, AND THE TIME AND DATE OF THE HISTORY REPORT.

F. ALLOW THE USER TO DISABLE/ENABLE DEVICES, ZONES, ACTIONS, TIMERS AND SEQUENCES. PROTECT THE DISABLE FUNCTION WITH A PASSWORD.

G. ALLOW THE USER TO ACTIVATE/RESTORE OUTPUTS, ACTIONS, SEQUENCES, AND SIMULATE DETECTOR SMOKE LEVELS.

H. ALLOW THE SERVICE USER TO ENTER TIME AND DATE, RECONFIGURE AN EXTERNAL PORT FOR DOWNLOAD PROGRAMMING, INITIATE AUTO PROGRAMMING AND CHANGE PASSWORDS. PROTECT THESE FUNCTIONS WITH A PASSWORD.

I. THE END–USER SHALL RETAIN COMPLETE RIGHTS AND OWNERSHIP TO ALL SOFTWARE RUNNING IN THE SYSTEM. THE ALARM EQUIPMENT VENDOR SHALL PROVIDE USEABLE HARD AND SOFT COPIES OF THE SOFTWARE DATABASE TO THE END–USER AT THE END OF THE WARRANTY PERIOD. THE DATABASE PROVIDED SHALL BE USEABLE BY ANY AUTHORIZED AND CERTIFIED DISTRIBUTOR OF THE PRODUCT LINE, AND SHALL INCLUDE ALL APPLICABLE PASSWORDS NECESSARY FOR TOTAL AND UNRESTRICTED USE AND MODIFICATION OF THE DATABASE. THE CONSULTING ENGINEER SHALL DEFINE THE EXTENT OF HARDCOPY DATABASE DOCUMENTATION TO BE PROVIDED.

2.5 UL LISTED AND APPROVED EQUIPMENT

A. CONTROL PANEL REQUIREMENTS: THE CONTROL PANEL OR PANELS AND ALL SYSTEM DEVICES (PULL STATIONS, SMOKE AND HEAT DETECTORS, ETC. SHALL BE AN EDWARDS EST TYPE EST3 SERIES (OR EQUAL). ALL UNDER ONE LABEL "UL LISTED AND APPROVED" FOR THE USE OF FIRE ALARM SYSTEMS IN THIS AREA OF THE UNITED STATES OF AMERICA. THE OPERATING CONTROLS SHALL BE LOCATED BEHIND LOCKED DOOR WITH VIEWING WINDOW. ALL CONTROL MODULES SHALL BE LABELED, AND ALL ZONE LOCATIONS SHALL BE IDENTIFIED.

NOTE: THE FIRE ALARM VENDOR MAY SUBSTITUTE THE EDWARDS EST IO SERIES PANEL FOR SYSTEMS UNDER 200 FIRE ALARM DEVICES.

B. SYSTEM CONTROLLERS: THE MAIN CONTROLLER 3–CPU SHALL BE SUPERVISED, SITE PROGRAMMABLE, AND OF MODULAR DESIGN SUPPORTING UP TO 125 DETECTORS AND 125 REMOTE MODULES PER ADDRESSABLE SIGNALING LINE CIRCUIT (SLC). THE CPU SHALL SUPPORT UP TO 10 SLC'S PER PANEL FOR A TOTAL SYSTEM CAPACITY OF 2500 INTELLIGENT ADDRESSABLE POINTS. THE SYSTEM SHALL BE DESIGNED WITH PEER–TO–PEER NETWORKING CAPABILITY FOR ENHANCED SURVIVABILITY, WITH

BUILDING DEPARTMENT NOTE: "THIS PLAN IS APPROVED ONLY FOR WORK INDICATED ON THE APPLICATION SPECIFICATION SHEET. ALL OTHER MATTERS SHOWN ARE NOT TO BE RELIED UPON, OR TO BE CONSIDERED AS EITHER BEING APPROVED OR IN ACCORDANCE WITH APPLICABLE CODES".

ALTERATION OR RE–USE OF THIS DRAWING FOR OTHER THAN THIS PROJECT WITHOUT WRITTEN CONSENT OF THE ABOVE ENGINEER IS PROHIBITED BY LAW.

Client:
RANGER PROPERTIES
4790 BROADWAY
NEW YORK, NY 10034

Architect:
FOGARTY FINGER
architecture | interiors
69 Walker St, New York, NY 10013
t 212 966 7450 f 212 966 7444

Library Architect:
Andrew Berman Architect, PLLC
77 Chambers Street, 4th Floor
New York, NY 10007
Tel 212.226.5998

Structural:
Thornton Tomasetti
51 Madison Avenue
New York, NY 10010
Tel 917.661.7800

MEP / FP:
Concessi Engineering, PC
499 7th Avenue, 11th Floor South Tower
New York, NY 10018
Tel 212.629.6810

FACADE:
SIMPSON GUMPERTZ & HEGER
550 7th Avenue, 10th Floor
New York, NY 10018
Tel 212.271.7000

CODE:
METROPOLIS
22 Courtland Street, 10th Floor
New York, NY 10007
Tel 212.233.6344

No.	Date	Issue
1	02/06/19	ISSUED FOR FILING / DD ESTIMATING

Project:
4790 BROADWAY
NEW YORK, NY 10034

Drawing Title:
FIRE ALARM SPECIFICATIONS SHEET #1 OF 3

Seal & Signature: STATE OF NEW YORK · ROBERT L. CONCESSI · No. 86705 · LICENSED PROFESSIONAL ENGINEER

DATE (MM–DD–YY): 11–02–2018
PROJECT No.: 7815.00
DRAWING BY: TB
CHK BY: RC
DWG. No.: FA–101.00
CADD FILE No.: –

SUPPORT FOR UP TO 64 MODES, EACH WITH UP TO 2500 POINTS AND AN OVERALL CAPACITY OF 160,000 POINTS. THE CABINETS SHALL BE STEEL, WITH A RED FINISH. THE CABINETS SHALL BE STEEL WITH A RED FINISH.

C. THE SYSTEM SHALL STORE ALL BASIC SYSTEM FUNCTIONALITY AND JOB SPECIFIC DATA IN NON–VOLATILE MEMORY. ALL SITE SPECIFIC AND OPERATING DATA SHALL SURVIVE A COMPLETE POWER FAILURE INTACT. PASSWORDS SHALL PROTECT ANY CHANGES TO SYSTEM OPERATIONS.

D. THE MAIN CONTROLLER MODULE SHALL CONTROL AND MONITOR ALL LOCAL OR REMOTE PERIPHERALS. IT SHALL SUPPORT A LARGE 960 CHARACTER LCD, POWER SUPPLY, REMOTE LCD AND ZONE DISPLAY ANNUNCIATORS, PRINTERS, AND SUPPORT COMMUNICATION INTERFACE STANDARD PROTOCOL (CSI) DEVICES SUCH AS COLOR COMPUTER ANNUNCIATORS AND COLOR GRAPHIC DISPLAYS. REMOTE LCD ANNUNCIATORS SHALL ALSO DISPLAY EACH AND EVERY POINT IN THE SYSTEM AND BE SIZED WITH THE SAME NUMBER OF CHARACTERS AS IN THE MAIN FACP DISPLAY.

E. THE PANEL SHALL HAVE AN INTERFACE MODULE FOR REMOTE SITE MONITORING. THE CONTROL PANEL SHALL INCLUDE BUILT–IN (PART OF THE FIRE ALARM CONTROL PANEL) DIGITAL ALARM COMMUNICATOR TRANSMITTER (DACT)) MODULE TO TRANSMIT SMOKE, SUPERVISORY, WATERFLOW, TROUBLE, CO ALARM (IF INCLUDED), PUMP RUNNING, AND PUMP TROUBLE EVENTS TO A CENTRAL MONITORING STATION (CMS) COMPANY. THE DACT SHALL SUPPORT DUAL TELEPHONES LINES, CONTACT I.D. COMMUNICATIONS, AND CONFIGURED FOR DUAL TONE MULTI–FREQUENCY (DTMF) OR PULSE MODES. IT SHALL BE POSSIBLE TO DELAY AC POWER FAILURE REPORTS, AUTO TEST CALL, AND BE SITE PROGRAMMABLE. THE DACT SHALL BE CAPABLE OF TRANSMITTING EVERY INDIVIDUAL CONDITION TO THE CENTRAL STATION VIA CONTACT I.D. FORMAT. SELECTION OF CONTACT I.D. FORMAT SHALL BE OF THE DISCRETION OF THE ENGINEER AND BUILDING OWNER BUT SHALL BE AN AVAILABLE OPTION. CONTRACTORS WHO CHOOSE A SEPARATE DIALER MUST MEET ALL OF THE ABOVE OPTIONS AND ARE RESPONSIBLE FOR ALL NECESSARY ADDED CONNECTIONS SUCH AS POWER (WITH FCO/FDS), CONDUIT, WIRE, ADDRESSABLE INTERFACE MODULES ETC.

F. THE SYSTEM SHALL HAVE BUILT–IN AUTOMATIC SYSTEM PROGRAMMING TO AUTOMATICALLY ADDRESS AND MAP ALL SYSTEM DEVICES ATTACHED TO THE MAIN CONTROLLER. A MINIMUM DEFAULT SINGLE STAGE ALARM SYSTEM OPERATION SHALL BE SUPPORTED WITH ALARM SILENCE, EVENT SILENCE, DRILL, LAMP TEST, AND RESET COMMON CONTROLS.

G. ADVANCED WINDOWS–BASED SYSTEM DEFINITION UTILITY WITH PROGRAM VERSION REPORTING TO DOCUMENT ANY AND ALL CHANGES MADE DURING SYSTEM START–UP OR SYSTEM COMMISSIONING SHALL BE USED TO MAINTAIN SITE SPECIFIC PROGRAMMING. TIME AND DATE STAMPS OF ALL MODIFICATIONS MADE TO THE PROGRAM MUST BE INCLUDED TO ALLOW FULL RETENTION OF ALL PREVIOUS PROGRAM VERSION DATA. IT SHALL SUPPORT PROGRAMMING OF ANY INPUT POINT TO ANY OUTPUT POINT. THE SYSTEM SHALL SUPPORT THE USE OF BAR CODE READERS TO ASSIST CUSTOM PROGRAMMING FUNCTIONS. IT SHALL ALLOW AUTHORIZED CUSTOMIZATION OF FUNDAMENTAL SYSTEM OPERATIONS USING INITIATING EVENTS TO START ACTIONS, TIMERS, SEQUENCES AND LOGICAL ALGORITHMS. THE SYSTEM PROGRAM SHALL MEET THE REQUIREMENTS OF THIS PROJECT, CURRENT CODES AND STANDARDS, AND SATISFY THE LOCAL AUTHORITY HAVING JURISDICTION.

H. THE SYSTEM SHALL SUPPORT DISTRIBUTED PROCESSOR INTELLIGENT DETECTORS WITH THE FOLLOWING OPERATIONAL ATTRIBUTES; INTEGRAL MULTIPLE DIFFERENTIAL SENSORS, AUTOMATIC DEVICE MAPPING, ELECTRONIC ADDRESSING, ENVIRONMENTAL COMPENSATION, PRE–ALARM, DIRTY DETECTOR IDENTIFICATION, AUTOMATIC DAY/NIGHT SENSITIVITY ADJUSTMENT, NORMAL/ALARM LEDS, RELAY BASES, SOUNDER BASES AND ISOLATOR BASES.

I. THE SYSTEM SHALL USE FULL DIGITAL COMMUNICATIONS TO SUPERVISE ALL ADDRESSABLE LOOP DEVICES FOR PLACEMENT, CORRECT LOCATION, AND OPERATION. IT SHALL ALLOW SWAPPING OF "SAME TYPE" DEVICES WITHOUT THE NEED OF ADDRESSING AND IMPOSE THE "LOCATION" PARAMETERS ON REPLACEMENT DEVICE. IT SHALL INITIATE AND MAINTAIN A TROUBLE IF A DEVICE IS ADDED TO A LOOP AND CLEAR THE TROUBLE WHEN THE NEW DEVICE IS MAPPED AND DEFINED INTO THE SYSTEM.

J. EACH CONTROLLER SHALL CONTAIN A RS232 PRINTER/PROGRAMMING PORT FOR PROGRAMMING LOCALLY VIA AN IBM PC. WHEN OPERATIONAL, EACH CONTROLLER SHALL SUPPORT A PRINTER THROUGH THE RS232 PORT AND BE CAPABLE OF MESSAGE ROUTING.

K. SINGLE STAGE OPERATION SHALL BE PROVIDED.

L. THE SYSTEM SHALL HAVE A UL LISTED DETECTOR SENSITIVITY TEST FEATURE, WHICH WILL BE A FUNCTION OF THE SMOKE DETECTORS AND PERFORMED AUTOMATICALLY EVERY 4 HOURS.

M. THE SYSTEM SHALL SUPPORT 100% OF ALL REMOTE DEVICES IN ALARM AND PROVIDE SUPPORT FOR A 100% COMPLIMENT OF DETECTOR ISOLATOR BASES.

N. ALL PANEL MODULES SHALL BE SUPERVISED FOR PLACEMENT AND RETURN TROUBLE IF DAMAGED OR REMOVED.

O. THE SYSTEM SHALL HAVE A CPU WATCHDOG CIRCUIT TO INITIATE TROUBLE SHOULD THE CPU FAIL.

P. THE FIRE ALARM / LIFE SAFETY SYSTEM SHALL INCORPORATE THE ABILITY TO CODE NOTIFICATION APPLIANCE CIRCUITS PER THE NYC BUILDING CODE.

Q. AUDIBLE NOTIFICATION APPLIANCES SHALL BE AFFECTED BY SIGNAL SILENCE FEATURES. VISUAL SIGNAL APPLIANCE SHALL NOT BE AFFECTED BY SIGNAL SILENCE FEATURES.

R. USER INTERFACE: THE 3–LCDXL DISPLAY MODULE SHALL BE OF MEMBRANE STYLE CONSTRUCTION WITH A 24 LINE BY 40–CHARACTER (960 TOTAL CHARACTERS) LIQUID CRYSTAL DISPLAY (LCD). THE LCD SHALL USE SUPER–TWIST TECHNOLOGY AND BACKLIGHTING FOR HIGH CONTRAST VISUAL CLARITY AND A COLORED GRAY/BLACK AND WHITE DISPLAY. IN THE NORMAL MODE THE LCD SHALL DISPLAY THE TIME, A CUSTOMER FACILITY NAME, AND THE NUMBER OF HISTORY EVENTS. IN THE ALARM MODE THE LCD DISPLAY THE TOTAL NUMBER OF EVENTS AND THE TYPE OF EVENT ON DISPLAY. THE LCD SHALL RESERVE 42 CHARACTERS OF DISPLAY SPACE FOR EACH USER CUSTOM MESSAGE BY ADDRESSABLE DEVICE. THE MODULE SHALL HAVE VISUAL INDICATORS FOR THE FOLLOWING COMMON CONTROL FUNCTIONS; POWER, ALARM, SUPERVISORY, MONITOR, TROUBLE, DISABLE, GROUND FAULT, CPU FAIL, AND TEST. THERE SHALL BE COMMON CONTROL KEYS AND VISUAL INDICATORS FOR RESET, ALARM SILENCE, PANEL SILENCE, AND DRILL. PROVIDE FOUR PAIRS OF DISPLAY CONTROL KEYS FOR SELECTION OF EVENT DISPLAY BY TYPE (ALARM, SUPERVISORY, MONITOR AND TROUBLE) AND FORWARD / BACKWARD SCROLLING THROUGH EVENT LISTINGS. THE OPERATION OF THESE KEYS SHALL BE INTEGRATED WITH THE RELATED COMMON CONTROL INDICATORS TO FLASH THE INDICATORS WHEN UNDISPLAYED EVENTS ARE AVAILABLE FOR DISPLAY AND TURN ON STEADY WHEN ALL EVENTS HAVE BEEN DISPLAYED. THE LCD SHALL DISPLAY THE FIRST EVENT OF THE HIGHEST PRIORITY AS WELL AS THE PREVIOUS SEVEN (7) ALARM EVENTS "HANDS FREE" IN CHRONOLOGICAL ORDER SO THAT THE ARRIVING FIREFIGHTER MAY TRACK THE FIRES PROGRESSION. PROVIDE SYSTEM FUNCTION KEYS; STATUS, REPORTS, ENABLE, DISABLE, ACTIVATE, RESTORE, PROGRAM, AND TEST. THE MODULE SHALL HAVE A NUMERIC KEYPAD, ZERO THROUGH NINE WITH DELETE AND ENTER KEYS.

S. POWER SUPPLIES: THE POWER SUPPLY SHALL BE A HIGH EFFICIENCY SWITCH MODE TYPE WITH LINE MONITORING TO AUTOMATICALLY SWITCH TO BATTERIES FOR POWER FAILURE OR BROWN OUT CONDITIONS. THE AUTOMATIC BATTERY CHARGER SHALL HAVE LOW BATTERY DISCHARGE PROTECTION. THE POWER SUPPLY SHALL PROVIDE INTERNAL POWER AND 24 VDC AT 7.0A CONTINUOUS FOR NOTIFICATION APPLIANCE CIRCUITS. THE POWER SUPPLY SHALL BE CAPABLE OF PROVIDING 7A TO OUTPUT CIRCUITS FOR A MAXIMUM PERIOD OF 100 MS. ALL OUTPUTS SHALL BE POWER LIMITED. THE BATTERY SHALL BE SIZED TO SUPPORT THE SYSTEM FOR 24 HOURS OF SUPERVISORY AND TROUBLE SIGNAL CURRENT PLUS GENERAL ALARM FOR 15 MINUTES.

T. AUXILIARY POWER SUPPLIES SHALL BE A HIGH EFFICIENCY SWITCH MODE TYPE WITH LINE MONITORING TO AUTOMATICALLY SWITCH TO BATTERIES FOR POWER FAILURE OR BROWN OUT CONDITIONS. THE AUTOMATIC BATTERY CHARGER SHALL HAVE LOW BATTERY DISCHARGE PROTECTION. THE POWER SUPPLY SHALL PROVIDE INTERNAL POWER AND 24 VDC AT 7.0A CONTINUOUS FOR NOTIFICATION APPLIANCE CIRCUITS. THE POWER SUPPLY SHALL BE CAPABLE OF PROVIDING 7A TO OUTPUT CIRCUITS FOR A MAXIMUM PERIOD OF 100 MS. ALL OUTPUTS SHALL BE POWER LIMITED. THE BATTERY SHALL BE SIZED TO SUPPORT THE SYSTEM FOR 24 HOURS OF SUPERVISORY AND TROUBLE SIGNAL CURRENT PLUS GENERAL ALARM FOR 15 MINUTES.

U. NETWORK ALPHANUMERIC ANNUNCIATORS SHALL BE LOCATED THROUGHOUT THE FACILITY AS INDICATED ON THE PLANS. THE SYSTEM SHALL HAVE THE CAPACITY TO SUPPORT 64 NETWORK ANNUNCIATORS OR EST3 NETWORK PANEL NODES. EACH ANNUNCIATOR SHALL CONTAIN A SUPERVISED, BACK LIT, LIQUID CRYSTAL WITH A MINIMUM OF 8 LINE WITH 21 CHARACTERS PER LINE. WHERE REQUIRED, THE ANNUNCIATOR SHALL INCLUDE ADDITIONAL ZONAL ANNUNCIATION AND MANUAL CONTROL WITHOUT ADDITIONAL ENCLOSURES. THE ANNUNCIATOR SHALL SUPPORT FULL ABILITY TO SERVE AS THE OPERATING INTERFACE TO THE SYSTEM AND SHALL INCLUDE THE FOLLOWING FEATURES; MATCHED APPEARANCE WITH OTHER SYSTEM DISPLAYS. EACH LCD DISPLAY ON EACH NODE (CABINET) IN THE SYSTEM SHALL BE CONFIGURABLE TO SHOW THE STATUS OF ANY OR ALL OF THE FOLLOWING FUNCTIONS ANYWHERE IN THE SYSTEM: ALARM, SUPERVISORY, TROUBLE, MONITOR.

V. EACH ANNUNCIATOR MUST BE CAPABLE OF SUPPORTING CUSTOM MESSAGES AS WELL AS SYSTEM EVENT ANNUNCIATION. IT MUST BE POSSIBLE TO FILTER UNWANTED ANNUNCIATION OF TROUBLE, ALARM OR SUPERVISORY FUNCTIONS ON A BY POINT OR BY GEOGRAPHIC AREA. THE ANNUNCIATORS SHALL BE MOUNTED IN STAND–ALONE ENCLOSURES OR INTEGRATED INTO THE NETWORK PANELS AS INDICATED ON THE PLANS.

2.6 COMPONENTS

A. INTELLIGENT DEVICES –– GENERAL: EACH REMOTE DEVICE SHALL HAVE A MICROPROCESSOR WITH NON–VOLATILE MEMORY TO SUPPORT ITS FUNCTIONALITY AND SERVICEABILITY. EACH DEVICE SHALL STORE AS REQUIRED FOR ITS FUNCTIONALITY THE FOLLOWING DATA: DEVICE SERIAL NUMBER, DEVICE ADDRESS, DEVICE TYPE, PERSONALITY CODE, DATE OF MANUFACTURE, HOURS IN USE, TIME AND DATE OF LAST ALARM, AMOUNT OF ENVIRONMENTAL COMPENSATION LEFT/USED, LAST MAINTENANCE DATE, JOB/PROJECT NUMBER, CURRENT DETECTOR SENSITIVITY VALUES, DIAGNOSTIC INFORMATION (TROUBLE CODES) AND ALGORITHMS REQUIRED TO PROCESS SENSOR DATA AND PERFORM COMMUNICATIONS WITH THE LOOP CONTROLLER. EACH DEVICE SHALL BE CAPABLE OF ELECTRONIC ADDRESSING, EITHER AUTOMATICALLY OR APPLICATION PROGRAMMED ASSIGNED, TO SUPPORT PHYSICAL/ELECTRICAL MAPPING AND SUPERVISION BY LOCATION. SETTING A DEVICE'S ADDRESS BY PHYSICAL MEANS SHALL NOT BE NECESSARY.

B. INTELLIGENT DETECTORS –– GENERAL: THE SYSTEM INTELLIGENT DETECTORS SHALL BE CAPABLE OF FULL DIGITAL COMMUNICATIONS USING BOTH BROADCAST AND POLLING PROTOCOL. EACH DETECTOR SHALL BE CAPABLE OF PERFORMING INDEPENDENT FIRE DETECTION ALGORITHMS. THE FIRE DETECTION ALGORITHM SHALL MEASURE SENSOR SIGNAL DIMENSIONS, TIME PATTERNS AND COMBINE DIFFERENT FIRE PARAMETERS TO INCREASE RELIABILITY AND DISTINGUISH REAL FIRE CONDITIONS FROM UNWANTED DECEPTIVE NUISANCE ALARMS. SIGNAL PATTERNS THAT ARE NOT TYPICAL OF FIRES SHALL BE ELIMINATED BY DIGITAL FILTERS. DEVICES NOT CAPABLE OF COMBINING DIFFERENT FIRE PARAMETERS OR EMPLOYING DIGITAL FILTERS SHALL NOT BE ACCEPTABLE. EACH DETECTOR SHALL HAVE AN INTEGRAL MICROPROCESSOR CAPABLE OF MAKING ALARM DECISIONS BASED ON FIRE PARAMETER INFORMATION STORED IN THE DETECTOR HEAD. DISTRIBUTED INTELLIGENCE SHALL IMPROVE RESPONSE TIME BY DECREASING THE DATA FLOW BETWEEN DETECTOR AND ANALOG LOOP CONTROLLER. DETECTORS NOT CAPABLE OF MAKING INDEPENDENT ALARM DECISIONS SHALL NOT BE ACCEPTABLE. MAXIMUM TOTAL ANALOG LOOP RESPONSE TIME FOR DETECTORS CHANGING STATE SHALL BE 0.5 SECONDS. EACH DETECTOR SHALL HAVE A SEPARATE MEANS OF DISPLAYING COMMUNICATION AND ALARM STATUS. A GREEN LED SHALL FLASH TO CONFIRM COMMUNICATION WITH THE ANALOG LOOP CONTROLLER. A RED LED SHALL FLASH TO DISPLAY ALARM STATUS. THE DETECTOR SHALL BE CAPABLE OF IDENTIFYING UP TO 32 DIAGNOSTIC CODES. THIS INFORMATION SHALL BE AVAILABLE FOR SYSTEM MAINTENANCE. THE DIAGNOSTIC CODE SHALL BE STORED AT THE DETECTOR. EACH SMOKE DETECTOR SHALL BE CAPABLE OF TRANSMITTING PRE–ALARM AND ALARM SIGNALS IN ADDITION TO THE NORMAL, TROUBLE AND NEED CLEANING INFORMATION. IT SHALL BE POSSIBLE TO PROGRAM CONTROL PANEL ACTIVITY TO EACH LEVEL. EACH SMOKE DETECTOR MAY BE INDIVIDUALLY PROGRAMMED TO OPERATE AT ANY ONE OF FIVE (5) SENSITIVITY SETTINGS. EACH DETECTOR MICROPROCESSOR SHALL CONTAIN AN ENVIRONMENTAL COMPENSATION ALGORITHM THAT IDENTIFIES AND SETS AMBIENT "ENVIRONMENTAL THRESHOLDS" APPROXIMATELY SIX TIMES AN HOUR. THE MICROPROCESSOR SHALL CONTINUALLY MONITOR THE ENVIRONMENTAL IMPACT OF TEMPERATURE, HUMIDITY, OTHER CONTAMINATES AS WELL AS DETECTOR AGING. THE PROCESS SHALL EMPLOY DIGITAL COMPENSATION TO ADAPT THE DETECTOR TO BOTH 24–HOUR LONG TERM AND 4–HOUR SHORT–TERM ENVIRONMENTAL CHANGES. THE MICROPROCESSOR SHALL MONITOR THE ENVIRONMENTAL COMPENSATION VALUE AND ALERT THE SYSTEM OPERATOR WHEN THE DETECTOR APPROACHES 80% AND 100% OF THE ALLOWABLE ENVIRONMENTAL COMPENSATION VALUE. DIFFERENTIAL SENSING ALGORITHMS SHALL MAINTAIN A CONSTANT DIFFERENTIAL BETWEEN SELECTED DETECTOR SENSITIVITY AND THE "LEARNED" BASE LINE SENSITIVITY. THE BASE LINE SENSITIVITY INFORMATION SHALL BE UPDATED AND PERMANENTLY STORED AT THE DETECTOR APPROXIMATELY ONCE EVERY HOUR. THE INTELLIGENT ANALOG DETECTORS SHALL BE SUITABLE FOR MOUNTING ON ANY SIGNATURE SERIES DETECTOR MOUNTING BASE.

C. FIXED TEMPERATURE/RATE OF RISE HEAT DETECTOR, SIGA2–HRS: PROVIDE INTELLIGENT COMBINATION FIXED TEMPERATURE/RATE–OF–RISE HEAT DETECTORS SIGA2–HRS. THE HEAT DETECTOR SHALL HAVE A LOW MASS THERMISTOR HEAT SENSOR AND OPERATE AT A FIXED TEMPERATURE AND AT A TEMPERATURE RATE–OF–RISE. IT SHALL CONTINUALLY MONITOR THE TEMPERATURE OF THE AIR IN ITS SURROUNDINGS TO MINIMIZE THERMAL LAG TO THE TIME REQUIRED TO PROCESS AN ALARM. THE INTEGRAL MICROPROCESSOR SHALL DETERMINE IF AN ALARM CONDITION EXISTS AND INITIATE AN ALARM BASED ON THE ANALYSIS OF THE DATA. SYSTEMS USING CENTRAL INTELLIGENCE FOR ALARM DECISIONS SHALL NOT BE ACCEPTABLE. THE INTELLIGENT HEAT DETECTOR SHALL HAVE A NOMINAL FIXED TEMPERATURE ALARM POINT RATING OF 135OF (57OC) AND A RATE–OF–RISE ALARM POINT OF 15OF (9OC) PER MINUTE. THE HEAT DETECTOR SHALL BE RATED FOR CEILING INSTALLATION AT A MINIMUM OF 70 FT (21.3M) CENTERS AND BE SUITABLE FOR WALL MOUNT APPLICATIONS.

D. PHOTOELECTRIC SMOKE DETECTOR, SIGA2–PS: PROVIDE INTELLIGENT PHOTOELECTRIC SMOKE DETECTORS SIGA2–PS. THE ANALOG PHOTOELECTRIC DETECTOR SHALL UTILIZE A LIGHT SCATTERING TYPE PHOTOELECTRIC SMOKE SENSOR TO SENSE CHANGES IN AIR SAMPLES FROM ITS SURROUNDINGS. THE INTEGRAL MICROPROCESSOR SHALL DYNAMICALLY EXAMINE VALUES FROM THE SENSOR AND INITIATE AN ALARM BASED ON THE ANALYSIS OF DATA. SYSTEMS USING CENTRAL INTELLIGENCE FOR ALARM DECISIONS SHALL NOT BE ACCEPTABLE. THE DETECTOR SHALL CONTINUALLY MONITOR ANY CHANGES IN SENSITIVITY DUE TO THE ENVIRONMENTAL AFFECTS OF DIRT, SMOKE, TEMPERATURE, AGING AND HUMIDITY. THE INFORMATION SHALL BE STORED IN THE INTEGRAL PROCESSOR AND TRANSFERRED TO THE ANALOG LOOP CONTROLLER FOR RETRIEVAL USING A LAPTOP PC OR THE SIGA–PRO SIGNATURE PROGRAM/SERVICE TOOL. THE PHOTO DETECTOR SHALL BE RATED FOR CEILING INSTALLATION AT A MINIMUM OF 30 FT (9.1M) CENTERS AND BE SUITABLE FOR WALL MOUNT APPLICATIONS. THE PHOTOELECTRIC SMOKE DETECTOR SHALL BE SUITABLE FOR DIRECT INSERTION INTO AIR DUCTS UP TO 3 FT (0.91M) HIGH AND 3 FT (0.91M) WIDE WITH AIR VELOCITIES UP TO 5,000 FT/MIN. (0–25.39 M/SEC) WITHOUT REQUIRING SPECIFIC DUCT DETECTOR HOUSINGS OR SUPPLY TUBES. THE PERCENT SMOKE OBSCURATION PER FOOT ALARM SET POINT SHALL BE FIELD SELECTABLE TO ANY OF FIVE SENSITIVITY SETTINGS RANGING FROM 1.0% TO 3.5%. THE PHOTO DETECTOR SHALL BE SUITABLE FOR OPERATION IN THE FOLLOWING ENVIRONMENT: TEMPERATURE: 32OF TO 120OF (0OC TO 49OC), HUMIDITY: 0–93% RH, NON–CONDENSING, ELEVATION: NO LIMIT.

E. ADDRESSABLE CARBON MONOXIDE (CO) DETECTOR, EST MODEL SIGA2–COS WITH SOUNDER BASE. PROVIDE INTELLIGENT ADDRESSABLE CARBON MONOXIDE ALARMS AS REQUIRED BY CHAPTER 9. THE CO DETECTION ELEMENT SHALL INDICATE A TROUBLE CONDITION AT THE FACP SIGNALING END OF LIFE AND BE FIELD REPLACEABLE. THE CO DETECTOR SHALL BE UL 2075 LISTED.

F. STANDARD DETECTOR MOUNTING BASES, SIGA–SB / SIGA–SB4: PROVIDE STANDARD DETECTOR MOUNTING BASES SIGA–SB SUITABLE FOR MOUNTING ON NORTH AMERICAN 1–GANG, 3½" OR 4" OCTAGON BOX AND 4" SQUARE BOX. THE BASE SHALL, CONTAIN NO ELECTRONICS, SUPPORT ALL SIGNATURE SERIES DETECTOR TYPES AND HAVE THE FOLLOWING MINIMUM REQUIREMENTS: REMOVAL OF THE RESPECTIVE DETECTOR SHALL NOT AFFECT COMMUNICATIONS WITH OTHER DETECTORS, TERMINAL CONNECTIONS SHALL BE MADE ON THE ROOM SIDE OF THE BASE, BASES THAT MUST BE REMOVED TO GAIN ACCESS TO THE TERMINALS SHALL NOT BE ACCEPTABLE. THE BASE SHALL BE CAPABLE OF SUPPORTING ONE (1) SIGNATURE SERIES SIGA–LED REMOTE ALARM LED INDICATOR. PROVIDE REMOTE LED ALARM INDICATORS WHERE SHOWN ON THE PLANS.

G. AUDIBLE DETECTOR MOUNTING BASE, SIGA–AB4GT. WHERE SHOWN ON THE PROJECT PLANS INCLUDE DETECTOR AUDIBLE/SOUNDER BASE MODEL SIGA–AB4GT. THE SOUNDER BASE SHALL BE CAPABLE OF TWO TONES, TEMPORAL 3 FOR A FIRE CONDITION AND TEMPORAL 4 FOR A CARBON MONOXIDE CONDITION. THE TONES SHALL BE FULLY PROGRAMMABLE AND ALSO SYNCHRONIZE THE SOUND WITH OTHER SOUNDER BASES. THE SYSTEM SHALL BE UL2017 LISTED FOR DUAL SIGNALING FOR THIS PURPOSE.

H. DUCT DETECTOR HOUSING, SIGA–SD: PROVIDE MODEL SIGA–SD LOW PROFILE INTELLIGENT ADDRESSABLE DUCT SMOKE DETECTOR AS INDICATED ON THE PROJECT PLANS. PROVIDE FOR VARIATIONS IN DUCT AIR VELOCITY BETWEEN 100 AND 4,000 FEET PER MINUTE AND INCLUDE A WIDE SENSITIVITY RANGE OF .79 TO 2.46%/FT. OBSCURATION. INCLUDE ONE FORM–C SHUT DOWN RELAY RATED 2.0 AMPS @ 30 VDC AND ALSO INCLUDE SLAVE HIGH CONTACT RELAYS IF REQUIRED. PROVIDE AN AIR EXHAUST TUBE AND AN AIR SAMPLING INLET TUBE THAT EXTENDS INTO THE DUCT AIR STREAM UP TO TEN FEET. THE ADDRESSABLE DUCT HOUSING SHALL BE SUITABLE FOR EXTREME ENVIRONMENTS, INCLUDING A TEMPERATURE RANGE OF –20 TO 158 DEGREES F (–29 TO 70 DEGREES CELSIUS) AND OFFER A HARSH ENVIRONMENT GASKET OPTION. PROVIDE REMOTE ALARM LED INDICATORS SIGA–LED AND/OR REMOTE TEST STATION MODEL SD–TRK AS INDICATED ON THE PROJECT PLANS.

I. INTELLIGENT MODULES –– GENERAL: IT SHALL BE POSSIBLE TO ADDRESS EACH INTELLIGENT SIGNATURE SERIES MODULE WITHOUT THE USE OF DIP OR ROTARY SWITCHES. DEVICES USING DIP SWITCHES FOR ADDRESSING SHALL NOT BE ACCEPTABLE. THE PERSONALITY OF MULTIFUNCTION MODULES SHALL BE PROGRAMMABLE AT SITE TO SUIT CONDITIONS AND MAY BE CHANGED AT ANY TIME USING A PERSONALITY CODE DOWNLOADED FROM THE ANALOG LOOP CONTROLLER. MODULES REQUIRING EPROM, PROM, ROM CHANGES OR DIP SWITCH AND/OR JUMPER CHANGES SHALL NOT BE ACCEPTABLE. THE MODULES SHALL HAVE A MINIMUM OF 2 DIAGNOSTIC LEDS MOUNTED BEHIND A FINISHED COVER PLATE. A GREEN LED SHALL FLASH TO CONFIRM COMMUNICATION WITH THE LOOP CONTROLLER. A RED LED SHALL FLASH TO DISPLAY ALARM STATUS. THE MODULE SHALL BE CAPABLE OF STORING UP TO 24 DIAGNOSTIC CODES WHICH CAN BE RETRIEVED FOR TROUBLESHOOTING ASSISTANCE. INPUT AND OUTPUT CIRCUIT WIRING SHALL BE SUPERVISED FOR OPEN AND GROUND FAULTS. THE MODULE SHALL BE SUITABLE FOR OPERATION IN THE FOLLOWING ENVIRONMENT: TEMPERATURE: 32OF TO 120OF (0OC TO 49OC), HUMIDITY: 0–93% RH, NON–CONDENSING.

J. SINGLE INPUT MODULE, SIGA–CT1 (WATERFLOW DETECTORS, TAMPER SWITCHES ETC.): PROVIDE INTELLIGENT SINGLE INPUT MODULES SIGA–CT1. THE SINGLE INPUT MODULE SHALL PROVIDE ONE (1) SUPERVISED CLASS B INPUT CIRCUIT CAPABLE OF A MINIMUM OF 4 PERSONALITIES, EACH WITH A DISTINCT OPERATION. THE MODULE SHALL BE SUITABLE FOR MOUNTING ON NORTH AMERICAN 2 ½" (64MM) DEEP 1–GANG BOXES AND 1 ½" (38MM) DEEP 4" SQUARE BOXES WITH 1–GANG COVERS. THE SINGLE INPUT MODULE SHALL SUPPORT THE FOLLOWING CIRCUIT TYPES: NORMALLY–OPEN ALARM LATCHING (MANUAL STATIONS, HEAT DETECTORS, ETC.), NORMALLY–OPEN ALARM DELAYED LATCHING (WATERFLOW SWITCHES), NORMALLY–OPEN ACTIVE NON–LATCHING (MONITOR, FANS, DAMPERS, DOORS, ETC.), NORMALLY–OPEN ACTIVE LATCHING (SUPERVISORY, TAMPER SWITCHES).

K. DUAL INPUT MODULE, SIGA–CT2: PROVIDE INTELLIGENT DUAL INPUT MODULES SIGA–CT2. THE DUAL INPUT MODULE SHALL PROVIDE TWO (2) SUPERVISED CLASS B INPUT CIRCUITS EACH CAPABLE OF A MINIMUM OF 4 PERSONALITIES, EACH WITH A DISTINCT OPERATION. THE MODULE SHALL BE SUITABLE FOR MOUNTING ON NORTH AMERICAN 2 ½" DEEP 1–GANG BOXES AND 1 ½" (38MM) DEEP 4" SQUARE BOXES WITH 1–GANG COVERS. THE DUAL INPUT MODULE SHALL SUPPORT THE FOLLOWING CIRCUIT TYPES: NORMALLY–OPEN ALARM LATCHING (MANUAL STATIONS, HEAT DETECTORS, ETC.), NORMALLY–OPEN ALARM DELAYED LATCHING (WATERFLOW SWITCHES), NORMALLY–OPEN ACTIVE NON–LATCHING (MONITOR, FANS, DAMPERS, DOORS, ETC.), NORMALLY–OPEN ACTIVE LATCHING (SUPERVISORY, TAMPER SWITCHES).

L. SINGLE INPUT SIGNAL MODULE, SIGA–CC1: PROVIDE INTELLIGENT SINGLE INPUT SIGNAL MODULES SIGA–CC1. THE SINGLE INPUT (SINGLE RISER SELECT) SIGNAL MODULE SHALL PROVIDE ONE (1) SUPERVISED CLASS B OUTPUT CIRCUIT CAPABLE OF A MINIMUM OF 2 PERSONALITIES, EACH WITH A DISTINCT OPERATION. WHEN SELECTED AS A TELEPHONE POWER SELECTOR, THE MODULE SHALL BE CAPABLE OF GENERATING ITS OWN "RING TONE". THE MODULE SHALL BE SUITABLE FOR MOUNTING ON NORTH AMERICAN 2 ½" (64MM) DEEP 2–GANG BOXES AND 1 ½" (38MM) DEEP 4" SQUARE BOXES WITH 2–GANG COVERS, OR EUROPEAN 100MM SQUARE BOXES. THE SINGLE INPUT SIGNAL MODULE SHALL SUPPORT THE FOLLOWING OPERATIONS: AUDIBLE/VISIBLE SIGNAL POWER SELECTOR (POLARIZED 24 VDC @ 2A).

M. CONTROL RELAY MODULE, SIGA–CR: PROVIDE INTELLIGENT CONTROL RELAY MODULES SIGA–CR. THE CONTROL RELAY MODULE SHALL PROVIDE ONE FORM "R" DRY RELAY CONTACT RATED AT 2 AMPS @ 24 VDC TO CONTROL EXTERNAL APPLIANCES OR EQUIPMENT SHUTDOWN. THE CONTROL RELAY SHALL BE RATED FOR PILOT DUTY AND RELEASING SYSTEMS. THE POSITION OF THE RELAY CONTACT SHALL BE CONFIRMED BY THE SYSTEM FIRMWARE. THE CONTROL RELAY MODULE SHALL BE SUITABLE FOR MOUNTING ON NORTH AMERICAN 2 ½" (64MM) DEEP 1–GANG BOXES AND 1 ½" DEEP 4" SQUARE BOXES WITH 1–GANG COVERS.

N. INTELLIGENT MANUAL PULL STATIONS –– GENERAL: IT SHALL BE POSSIBLE TO ADDRESS EACH SIGNATURE SERIES FIRE ALARM PULL STATION WITHOUT THE USE OF DIP OR ROTARY SWITCHES. DEVICES USING DIP SWITCHES FOR ADDRESSING SHALL NOT BE ACCEPTABLE. THE MANUAL STATIONS SHALL HAVE A MINIMUM OF 2 DIAGNOSTIC LEDS MOUNTED ON THEIR INTEGRAL, FACTORY ASSEMBLED SINGLE OR TWO STAGE INPUT MODULE. A GREEN LED SHALL FLASH TO CONFIRM COMMUNICATION WITH THE LOOP CONTROLLER. A RED LED SHALL FLASH TO DISPLAY ALARM STATUS. THE STATION SHALL BE CAPABLE OF STORING UP TO 24 DIAGNOSTIC CODES THAT CAN BE RETRIEVED FOR TROUBLESHOOTING ASSISTANCE. INPUT CIRCUIT WIRING SHALL BE SUPERVISED FOR OPEN AND GROUND FAULTS. THE FIRE ALARM PULL STATION SHALL BE SUITABLE FOR OPERATION IN THE FOLLOWING ENVIRONMENT: TEMPERATURE: 32OF TO 120OF (0OC TO 49OC), HUMIDITY: 0–93% RH, NON–CONDENSING.

O. MANUAL PULL STATION, SIGA–270: PROVIDE INTELLIGENT SINGLE ACTION, SINGLE STAGE FIRE ALARM STATIONS SIGA–270. THE FIRE ALARM STATION SHALL BE OF METAL CONSTRUCTION WITH AN INTERNAL TOGGLE SWITCH. PROVIDE A LOCKED TEST FEATURE. FINISH THE STATION IN RED WITH SILVER "PULL IN CASE OF FIRE" ENGLISH LETTERING. THE MANUAL STATION SHALL BE SUITABLE FOR MOUNTING ON NORTH AMERICAN 2 ½" (64MM) DEEP 1–GANG BOXES AND 1 ½" (38MM) DEEP 4" SQUARE BOXES WITH 1–GANG COVERS.

P. MULTI–VOLTAGE CONTROL RELAYS, MR–200 SERIES: PROVIDE REMOTE CONTROL RELAYS CONNECTED TO SUPERVISED ANCILLARY CIRCUITS FOR CONTROL OF FANS, DAMPERS, DOOR RELEASES, ETC. RELAY CONTACT RATINGS SHALL BE DPDT AND RATED FOR 10 AMPERES AT 115 VAC. A SINGLE RELAY MAY BE ENERGIZED FROM A VOLTAGE SOURCE OF 24 VDC, 24 VAC, 115 VAC, OR 230 VAC. A RED LED SHALL INDICATE THE RELAY IS ENERGIZED. A METAL ENCLOSURE SHALL BE PROVIDED.

Q. ELECTROMAGNETIC DOORHOLDERS – GENERAL: ELECTROMAGNETIC DOORHOLDERS SUBMITTED FOR USE MUST HAVE WRITTEN PROOF OF THEIR COMPATIBILITY FOR THE PURPOSES INTENDED. SUCH PROOF SHALL BE IN THE FORM OF DOCUMENTATION FROM ALL MANUFACTURERS THAT CLEARLY STATES THAT THEIR EQUIPMENT (AS SUBMITTED) IS 100% COMPATIBLE WITH EACH OTHER FOR THE PURPOSES INTENDED.

R. WALL MOUNTED, 1504/1505/1508/1509 SERIES: PROVIDE FLUSH, SEMI–FLUSH OR SURFACE WALL MOUNTED ELECTROMAGNETIC DOORHOLDER/RELEASES RATED AT 24 VAC/DC AS DIRECTED BY THE CONSULTING ENGINEER. FINISH SHALL BE BRUSHED ZINC.

S. STI STOPPER II LEXAN GUARDS: MANUAL PULL STATIONS THAT ARE PROVIDED WITH STI STOPPER II LEXAN GUARDS SHALL INCLUDE NON–AUDIBLE ALARMS AS REQUIRED ON THE PLANS. THEY SHALL BE SURFACE OR FLUSH MOUNTING, AS REQUIRED FOR EACH INDIVIDUAL DEVICE. STOPPER COVERS SHALL ONLY BE INCLUDED ON DEVICES SHOWN ON THE PLANS TO INCLUDE THEM.

T. PROJECTED BEAM DETECTOR – EDWARDS EST EC–5000R. THE PROJECTED BEAM TYPE SMOKE DETECTOR SHALL BE A 4–WIRE 12/24 VDC DEVICE MONITORED BY THE FIRE ALARM CONTROL PANEL THROUGH A TWO CIRCUIT SIGA–CT2 MONITOR MODULE (ONE ZONE FOR ALARM AND ONE FOR TROUBLE). THE PROJECTED BEAM TYPE SMOKE DETECTOR SHALL BE LISTED TO UL 268 LISTED AND SHALL CONSIST OF UP TO TWO INTEGRATED TRANSMITTERS, RECEIVER DETECTOR HEADS AND SINGLE LOW LEVEL REMOTE CONTROL UNIT. THE DETECTOR SHALL OPERATE BETWEEN A RANGE OF 26.25 FT. TO 330 FT. (8M TO 100M). THE TEMPERATURE RANGE OF THE SYSTEM SHALL BE –4°F TO 131°F. THE BEAM DETECTOR HEADS SHALL INCLUDE AN INTEGRAL BUILT–IN LASER POINTER TO ASSIST PRISM MOUNTING. THE BEAM DETECTOR SHALL FEATURE AUTOMATIC GAIN CONTROL WHICH WILL COMPENSATE FOR GRADUAL SIGNAL DETERIORATION FROM DIRT ACCUMULATION ON THE LENSES. THE BEAMS DETECTOR HEADS SHALL INCLUDE AUTOOPTIMISE SELF–CORRECTING MOTORIZED HEAD FEATURE TO ENSURE UNIT IS ALWAYS RECEIVING MAXIMUM SIGNAL AVAILABLE, AND SHALL AUTOMATICALLY COMPENSATE FOR BUILDING SHIFT. THE UNIT SHALL INCLUDE A LOW LEVEL REMOTE DISPLAY AND CONTROL UNIT WITH LCD READ–OUT FOR SET–UP, REPORTING AND TESTING OF UP TO TWO SEPARATE DETECTOR HEADS. THE SYSTEM SHALL BE CAPABLE OF PROGRAMMING ALARM THRESHOLDS OF 10% TO 60% IN 1% INCREMENTS. THE SYSTEM SHALL BE CAPABLE OF PROGRAMMING DELAY TO FAULT AND DELAY TO ALARM FROM 2 SECONDS TO 30 SECONDS IN 1 SECOND INCREMENTS. TEST AND ACCEPTANCE OF THE SYSTEM SHALL BE CARRIED OUT BY USING THE UL APPROVED INTERNAL ELECTRONIC OBSCURATION FIRE TEST. THE CONTRACTOR SHALL PROVIDE MODEL 5000–004 PRISM KIT FOR INSTALLATIONS WITH THE TRANSMISSION DISTANCE GREATER THAN 165 FT. ALL BEAM DETECTORS SHALL INCLUDE A PRISM MOUNTING PLATE (5000–007 OR 5000–008) AND A MODEL 3000–201 360/180 DEGREE ADJUSTMENT BRACKET.

U. FUSE CUT OUT/FUSED DISCONNECT SWITCH: THE PRIMARY SOURCE OF POWER AND THE SECONDARY SOURCE OF POWER SHALL EACH BE PROVIDED WITH A MEANS OF DISCONNECT FROM THE FIRE ALARM SYSTEM. EACH DISCONNECT SHALL CONSIST OF A FUSED DISCONNECT SWITCH, LOCKED IN THE ON POSITION WITH KEY KEPT ON PREMISES ACCESSIBLE ONLY TO AUTHORIZED PERSONNEL. SUCH DISCONNECT SHALL BE PAINTED RED AND PERMANENTLY IDENTIFIED AS FIRE ALARM CIRCUIT AND LABELED AS TO SYSTEM/LOCATION SERVED, WITH A MEANS OF INTERRUPTING THE UNFUSED NEUTRAL AND ALL UNGROUNDED CONDUCTORS. FOR BUILDINGS SERVED AT UP TO 300 VOLTS TO GROUND, THE SERVICE VOLTAGE SHALL BE TRANSFORMED TO 120/208 VOLTS AND A FIRE ALARM FUSED DISCONNECT PROVIDED WITHIN A CIRCUIT LENGTH OF TEN 3.05 M (10 FT.), SHALL BE CONNECTED AT THE TRANSFORMER SECONDARY ON THE 120/208 VOLT SIDE. THE FIRE ALARM SYSTEM FUSED DISCONNECT SWITCH ON THE TRANSFORMER SECONDARY SIDE SHALL COMPLY WITH THE REQUIREMENTS OF THE PRIMARY AND SECONDARY POWER SOURCE FUSED DISCONNECT SWITCHES SPECIFIED ABOVE. FUSED CUTOUTS SHALL BE PROVIDED WHERE MULTIPLE CIRCUITS ARE REQUIRED TO SUPPORT THE FIRE ALARM SYSTEM AND RELATED AUXILIARIES MOUNTED IN A FUSED CUTOUT PANEL SUITABLE FOR THE NUMBER OF CIRCUITS NEEDED. THE CONTRACTOR SHALL PROVIDE AN INDIVIDUAL CARTRIDGE FUSED CUT–OUT PANEL WITH THREE (3) POLES AND A REMOVABLE, SOLID COPPER, NEUTRAL BAR IN FUSE GAP FOR THE FCS, REMOTE DATA GATHERING PANELS (DGPS), BOOSTER POWER SUPPLIES AND OTHER FIRE ALARM EQUIPMENT. FUSED CUT–OUTS SHALL BE PROVIDED WITH SILVER SAND FUSES, CURRENT LIMITING TYPE WITH AN INTERRUPTING CAPACITY RATING OF 200,000 AMPS (R.M.S. SYMMETRICAL). THE SIZE OF THE FUSES SHALL BE SIZED APPROPRIATELY BUT BE THIRTY (30) AMPERES MINIMUM. THE FUSED CUT–OUT PANEL SHALL BEAR AN ENGRAVED WHITE–CORE PHENOLIC OR BAKELITE IDENTIFICATION NAMEPLATE STATING IN MINIMUM ONE–QUARTER INCH (1/4") HIGH WHITE LETTERS ON A RED BACKGROUND "FIRE ALARM FUSED CUT–OUT". A FOUR (4) WIRE FEEDER SHALL BRING THREE PHASE 120/208 VOLT SERVICE TO THE FUSED CUT–OUT. THE FEEDER SHALL BE TAPPED OFF THE MAIN BUILDING SERVICE AHEAD OF THE MAIN SERVICE SWITCH BUT AFTER THE CURRENT TRANSFORMERS (METERING TRANSFORMERS).

V. STAND–ALONE 120 VAC/9 VDC SMOKE ALARMS, KIDDE MODEL P12040. PROVIDE STAND–ALONE 120 VOLT LINE OPERATED SMOKE ALARMS WITH 9 VDC BATTERY BACK UP. SMOKE ALARMS SHALL BE INSTALLED IN EACH SLEEPING ROOM, 15 FT FROM ANY SLEEPING ROOM, AND ON EVERY LEVEL OF EACH APARTMENT AS REQUIRED BY NYC CODE CHAPTER 9. SMOKE ALARMS SHALL BE INTERCONNECTED AND WIRED IN TANDEM SO THAT ALL SMOKE ALARM SOUNDERS WITHIN THE APARTMENT ACTIVATE TOGETHER. SMOKE ALARMS SHALL BE INSTALLED IN ACCORDANCE WITH THE LATEST REQUIREMENTS OF NYC CODE.

W. STAND–ALONE COMBINATION SMOKE AND CARBON MONOXIDE (CO) ALARMS, KIDDE MODEL KN–COPE–I. PROVIDE STAND–ALONE COMBINATION 120 VAC LINE OPERATED SMOKE ALARMS WITH 9 VDC BATTERY BACK UP. SMOKE AND CO ALARMS SHALL BE INSTALLED IN EACH SLEEPING ROOM, 15 FT FROM ANY SLEEPING ROOM, AND IN THE PATH OF EGRESS AS REQUIRED BY NYC CODE CHAPTER 9. SMOKE ALARMS SHALL BE MEA APPROVED, INTERCONNECTED AND INSTALLED IN ACCORDANCE WITH THE LATEST REQUIREMENTS OF NYC CODE.

PART III – EXECUTION

1.1 INSTALLATION

A. THE ENTIRE SYSTEM SHALL BE INSTALLED IN A WORKMANLIKE MANNER, IN ACCORDANCE WITH APPROVED MANUFACTURER'S WIRING DIAGRAM. THE CONTRACTOR SHALL FURNISH ALL CONDUIT, WIRING, OUTLET BOXES, JUNCTION BOXES, CABINETS AND SIMILAR DEVICES NECESSARY FOR THE COMPLETE INSTALLATION. ALL WIRING SHALL BE OF THE TYPE RECOMMENDED BY THE MANUFACTURER, APPROVED BY THE NYC FIRE DEPARTMENT, NYC FIRE CODE, NYC ELECTRICAL CODE, AND SPECIFIED WITH IN.

B. ALL PENETRATION OF FLOOR SLABS AND FIREWALLS SHALL BE SLEEVED (1" CONDUIT MINIMUM) FIRE STOPPED IN ACCORDANCE WITH ALL LOCAL FIRE CODES.

C. END OF LINE RESISTORS SHALL BE FURNISHED AS REQUIRED FOR MOUNTING AS DIRECTED BY THE MANUFACTURER. DEVICES CONTAINING END–OF–LINE RESISTORS SHALL BE APPROPRIATELY LABELED. DEVICES SHOULD BE LABELED SO REMOVAL OF THE DEVICE IS NOT REQUIRED TO IDENTIFY THE EOL DEVICE.

D. ALL MANUAL PULL STATIONS SHALL BE MOUNTED 42 – 48 INCHES ABOVE THE FINISHED FLOOR, AS MEASURED TO THE HANDLE.

E. ALL AUDIO/VISUAL DEVICES SHALL BE MOUNTED 80 INCHES ABOVE THE FINISHED FLOOR, AS MEASURED TO THE BOTTOM OF THE LENS. DEVICES SHALL BE MOUNTED NO LESS THAN 6 INCHES FROM THE CEILING. AUDIO VISUAL DEVICES SHALL BE MOUNTED PER NFPA 72.

F. NO AREA SMOKE DETECTORS SHALL BE MOUNTED WITHIN 36 INCHES OF ANY HVAC SUPPLY, RETURN AIR REGISTER OR LIGHTING FIXTURE.

G. NO AREA SMOKE OR HEAT DETECTOR SHALL BE MOUNTED WITHIN 12 INCHES OF ANY WALL. ALL DETECTORS SHALL BE INSTALLED IN STRICT ACCORDANCE WITH NFPA 72 AS AMENDED IN APPENDIX Q GUIDELINES FOR SUCH DEVICES.

H. ALL MECHANICAL ROOMS, BOILER ROOMS, GYMNASIUMS, WIRING CLOSETS, CUSTODIAN ROOMS, ATTIC SPACES, ETC. OR AREAS WITH NO HUNG CEILINGS SHALL BE PIPED WITH 3/4" CONDUIT AND INSTALLED AS NECESSARY BY THE ELECTRICAL CODE. ALL AREAS IN PUBLIC VIEW SHALL BE IN METAL CONDUIT. ALL BOXES MUST BE PAINTED RED AND LABELED "FIRE ALARM".

I. ALL ADDRESSABLE MODULES SHALL BE MOUNTED WITHIN 36 INCHES OF THE MONITORED OR CONTROLLED POINT OF TERMINATION. THIS SHALL INCLUDE, BUT IS NOT NECESSARILY

BUILDING DEPARTMENT NOTE: "THIS PLAN IS APPROVED ONLY FOR WORK INDICATED ON THE APPLICATION SPECIFICATION SHEET. ALL OTHER MATTERS SHOWN ARE NOT TO BE RELIED UPON, OR TO BE CONSIDERED AS EITHER BEING APPROVED OR IN ACCORDANCE WITH APPLICABLE CODES".

ALTERATION OR RE–USE OF THIS DRAWING FOR OTHER THAN THIS PROJECT WITHOUT WRITTEN CONSENT OF THE ABOVE ENGINEER IS PROHIBITED BY LAW.

Client:

RANGER PROPERTIES
4790 BROADWAY
NEW YORK, NY 10034

Architect:

FOGARTY FINGER
architecture | interiors
69 Walker St, New York, NY 10013
t 212 966 7450 f 212 966 7444

Library Architect:

Andrew Berman Architect, PLLC
77 Chambers Street, 4th Floor
New York, NY 10007
Tel 212.226.5998

Structural:

Thornton Tomasetti
51 Madison Avenue
New York, NY 10010
Tel 917.661.7800

MEP / FP:

Concessi Engineering, PC
499 7th Avenue, 11th Floor South Tower
New York, NY 10018
Tel 212.629.6810

FACADE:

SIMPSON GUMPERTZ & HEGER
550 7th Avenue, 10th Floor
New York, NY 10018
Tel 212.271.7000

CODE:

METROPOLIS
22 Courtland Street, 10th Floor
New York, NY 10007
Tel 212.233.6344

No.	Date	Issue
1	02/06/19	ISSUED FOR FILING / DD ESTIMATING

Project:

4790 BROADWAY
NEW YORK, NY 10034

Drawing Title:

FIRE ALARM SPECIFICATIONS SHEET #2 OF 3

Seal & Signature:

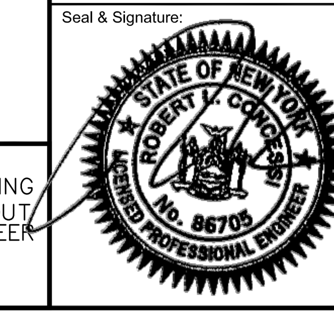

DATE (MM–DD–YY):	11–02–2018
PROJECT No.:	7815.00
DRAWING BY:	TB
CHK BY:	RC
DWG. No.:	FA–102.00
CADD FILE No.: –	03 OF 15

LIMITED TO, FAN SHUTDOWN, ELEVATOR RECALL, SHUNT TRIP, SPRINKLER STATUS POINTS, OR DOOR RELEASE. LABEL ALL ADDRESSABLE MODULES AS TO THEIR FUNCTION.

J. NEW DOOR HOLDERS SHALL DERIVE THEIR 24VAC/VDC POWER FROM A SEPARATE POWER SUPPLY HOUSED IN A DEDICATED, METAL ENCLOSURE. THE POWER SUPPLY SHALL HAVE A 120VAC FEED, AND IS TO BE CENTRALLY LOCATED TO SERVE DOOR HOLDERS ON A PER FLOOR OR AREA BASIS. ALL EXISTING DOOR HOLDERS SHALL BE CONNECTED TO NEW FACP. E.C. SHALL EXTEND ALL EXISTING WIRING IN ORDER TO MAKE THIS WORK. LOCATIONS AND QUANTITIES OF DOOR HOLDER POWER SUPPLIES SHALL BE REFERENCED AND SUBMITTED IN THE SUBMISSION PACKAGE FOR APPROVAL BY THE CONSULTING ENGINEER.

K. ALL LOW VOLTAGE WIRING TERMINATED TO THE FIRE ALARM SYSTEM SHALL BE PLENUM RATED WITH NO EXCEPTIONS AND NO LESS THAN NO. 12 AWG IN SIZE FOR NAC CIRCUITS AND 16 AWG FOR INITIATING CIRCUITS, AND SOLID COPPER PER THE NYC ELECTRICAL CODE. EXPOSED WIRE ABOVE 8FT AFF SHALL BE 150 DEGREES C AND AS SPECIFIED IN THE ELECTRICAL CODE.

L. ALL LINE VOLTAGE (120VAC) WIRING SHALL BE NO LESS THAN NO. 12 AWG IN SIZE, AND SOLID COPPER. THIS SHALL INCLUDE ALL SYSTEM GROUNDING. FACP MUST HAVE A DEDICATED FUSED DISCONNECT ARRANGED PER THE NYC ELECTRICAL CODE.

M. ALL WIRING SHALL BE COLOR-CODED THROUGHOUT, TO NATIONAL ELECTRICAL CODE STANDARDS.

N. POWER-LIMITED/NON-POWER-LIMITED NEC WIRING STANDARDS SHALL BE OBSERVED.

O. ALL JUNCTION BOX COVERS SHALL BE PAINTED RED AND LABELED FIRE ALARM SYSTEM.

P. FIRE ALARM SYSTEM WIRING SHALL NOT CO-MINGLE WITH ANY OTHER SYSTEM WIRING IN THE FACILITY. CONDUITS SHALL NOT BE SHARED UNDER ANY CIRCUMSTANCE. ONLY WHEN FIRE ALARM WIRING ENTERS THE ENCLOSURE OF A MONITORED OR CONTROLLED SYSTEM WILL CO-HABITATION BE PERMITTED (I.E. AT FAN STARTERS OR ELEVATOR CONTROLLERS). THIS WILL BE FIELD INSPECTED BY THE PROJECT ENGINEER.

Q. FIRE ALARM CONTROL PANEL ENCLOSURES SHALL HAVE ENGRAVED LABELS INDICATING, "FIRE ALARM SYSTEM", AND THE AREAS OF THE BUILDING SERVED BY THAT PANEL.

R. AUXILIARY RELAYS SHALL BE APPROPRIATELY LABELED TO INDICATE "FIRE ALARM SYSTEM" AND THEIR SPECIFIC FUNCTION (I.E. FAN S-1 SHUTDOWN).

S. ALL FIRE ALARM WIRING SHALL BE CONTINUOUS AND UNSPLICED. TERMINATIONS SHALL ONLY OCCUR AT FIRE ALARM DEVICES OR CONTROL PANEL ENCLOSURES UNDER TERMINAL SCREWS. ALL OTHER SPLICING METHODS ARE SPECIFICALLY DISALLOWED (I.E. PLASTIC WIRENUTS).

T. ALL FIRE ALARM WIRING SHALL BE INSTALLED USING A DEDICATED SYSTEM OF SUPPORTS (I.E. BRIDLE RINGS). FIRE ALARM WIRING SHALL NOT BE BUNDLED OR STRAPPED TO EXISTING CONDUIT, PIPE OR WIRE IN THE FACILITY. THIS WILL BE FIELD INSPECTED BY THE PROJECT ENGINEER.

U. ALL FIRE ALARM WIRING SHALL BE SLEEVED WHEN PASSING THROUGH ANY WALL, USING CONDUIT SLEEVES (1" MIN.) WITH BUSHINGS, AND FIRE STOPPED IN ACCORDANCE WITH CODE.

V. ALL LOW VOLTAGE OPERATION SHALL BE PROVIDED FROM THE FIRE ALARM CONTROL PANEL.

W. ALL FIRE ALARM DEVICES SHALL BE ACCESSIBLE FOR PERIODIC MAINTENANCE. SHOULD A DEVICE LOCATION INDICATED ON THE CONTRACT DRAWINGS NOT MEET THIS REQUIREMENT, IT SHALL BE THE RESPONSIBILITY OF THE INSTALLING CONTRACTOR TO BRING IT, IN WRITING, TO THE ATTENTION OF THE PROJECT ENGINEER. FAILURE TO BRING SUCH ISSUES TO THE ATTENTION OF THE PROJECT ENGINEER SHALL BE THE EXCLUSIVE LIABILITY OF THE INSTALLING ELECTRICAL CONTRACTOR.

X. THE INSTALLING ELECTRICAL CONTRACTOR SHALL BE RESPONSIBLE FOR THE REMOVAL OF ENTIRE EXISTING FIRE ALARM SYSTEM COMPONENTS AND CONTROLS ON THE DEMOLITION DRAWING SHOWN OR NOT, UPON APPROVAL OF THE AHJ AND THE CONSULTING ENGINEER. THE END-USER RESERVES THE RIGHT TO RETAIN ANY EXISTING FIRE ALARM SYSTEM COMPONENTS, UPON THEIR REQUEST. ALL EXISTING FIRE ALARM SYSTEM COMPONENTS REQUIRING SPECIAL HANDLING FOR DISPOSAL (DUE TO RADIOACTIVITY) SHALL BE THE RESPONSIBILITY OF THE INSTALLING CONTRACTOR. WRITTEN PROOF OF PROPER DISPOSAL BY THE INSTALLING CONTRACTOR SHALL BE REQUIRED PRIOR TO RELEASE OF OUTSTANDING RETAINAGE.

3.2 FIELD QUALITY CONTROL

A. THE SYSTEM SHALL BE INSTALLED AND FULLY TESTED UNDER THE SUPERVISION OF A TRAINED MANUFACTURER'S REPRESENTATIVE. THE SYSTEM SHALL BE DEMONSTRATED TO PERFORM ALL OF THE FUNCTION AS SPECIFIED.

B. THE INSTALLING CONTRACTOR OR FIRE ALARM EQUIPMENT VENDOR SHALL HAVE NO LESS THAN TWO (2) NICET LEVEL II FIRE ALARM TECHNICIANS DEDICATED TO THIS PROJECT.

C. THE INSTALLING CONTRACT AND THE ALARM SYSTEM VENDOR SHALL, UPON THE REQUEST OF THE CONSULTING ENGINEER OR END-USER, ATTEND ANY AND ALL PROJECT MEETINGS FOR THE PURPOSE OF ACCURATELY DETERMINING PROGRESS.

D. IT SHALL BE THE RESPONSIBILITY OF THE INSTALLING CONTRACTOR TO ASSURE THAT CONSTRUCTION DEBRIS DOES NOT ADVERSELY AFFECT ANY SENSING DEVICES INSTALLED AS PART OF THIS PROJECT. SHOULD IT BE DEEMED NECESSARY BY THE CONSULTING ENGINEER, END-USER OR AHJ, THE INSTALLING CONTRACTOR SHALL BE RESPONSIBLE FOR THE CLEANING OF ALL SMOKE DETECTORS PRIOR TO FINAL ACCEPTANCE.

3.3 TESTS

A. THE ALARM SYSTEM VENDOR SHALL TEST THE SYSTEM IN ACCORDANCE WITH THE MANUFACTURER'S REQUIREMENTS AND NFPA 72 AS AMENDED BY THE NYC BUILDING CODE AND NYC FIRE CODE. THE VENDOR SHALL PROVIDE COMPLETED REPORTS TO THE CONSULTING ENGINEER FOR REVIEW AND APPROVAL PRIOR TO FINAL ACCEPTANCE.

B. EACH INDIVIDUAL SYSTEM OPERATION ON A CIRCUIT BY CIRCUIT BASIS SHALL BE TESTED FOR ITS COMPLETE OPERATION. THE PROCEDURE FOR TESTING THE ENTIRE ALARM SYSTEM SHALL BE SET FORTH WITH THE CONSENT OF THE CODE ENFORCEMENT OFFICIAL, THE ENGINEER AND THE MANUFACTURER.

3.4 DOCUMENTATION AND TRAINING

A. THE CONTRACTOR SHALL COMPILE AND PROVIDE TO THE OWNERS THREE (3) COMPLETE MANUAL ON THE COMPLETED SYSTEM TO INCLUDE SITE SPECIFIC OPERATING AND MAINTENANCE INSTRUCTION, CATALOG CUTS OF ALL EQUIPMENT AND COMPONENTS, AS-BUILT WIRING DIAGRAMS AND A MANUFACTURER'S SUGGESTED SPARE PARTS LIST.

B. IN ADDITION TO THE ABOVE MANUALS, THE ELECTRICAL CONTRACTOR SHALL PROVIDE THE SERVICES OF THE MANUFACTURER'S TRAINED REPRESENTATIVE FOR TWO (2) SEPARATE CALENDAR DAYS FOR A PERIOD OF FOUR (4) HOURS PER DAY TO INSTRUCT THE OWNERS' DESIGNATED PERSONNEL ON THE OPERATION AND MAINTENANCE OF THE ENTIRE SYSTEM.

C. AS-BUILT DRAWINGS SHALL CONSIST OF THE FOLLOWING:

1. COMPLETE REVISION OF ALL PREVIOUSLY SUBMITTED DRAWINGS.
2. POINT-TO-POINT DEPICTION OF ALL DEVICE WIRING ON THE DEVICE LAYOUT FLOOR PLANS.
3. ONE (1) SET OF B-SIZE – 11 X 17 LAMINATED AS-BUILT DRAWINGS.
4. TWO (2) SETS OF 30"X42"INCH 1\16"=1' SCALE DRAWING SHOWING ALL POINTS OF ALARM. ONE SET SHALL BE SUBMITTED WITH THE CLOSE-OUT DOCUMENTS. SECOND SET SHALL BE MOUNTED IN FRAME WITH A LEXAN COVER. THESE DRAWING MUST BE SUBMITTED TO PROJECT ENGINEER OR APPROVAL.
5. FIRE ALARM MATRIX DESIGNED PER NFPA 72: FIGURE A.14.6.2.3(9).

D. TURNOVER OF ALL SOFTWARE DATABASE HARD/SOFT COPIES SHALL BE REQUIRED. THIS SHALL INCLUDE ALL POSSIBLE PROGRAMMING SOFTWARE LOGS, DISKETTES OR CDS CONTAINING EXPORTED PROJECT FILES, HARD COPIES OF ALL DEVICE MAPS, THE REVISION NUMBER OF THE VERSION OF PROGRAMMING UTILITY USED, AND ALL REQUIRED PASSWORDS. THE TURNOVER OF ALL DATABASE INFORMATION SHALL OCCUR PRIOR TO THE END OF THE ONE (1) WARRANTY PERIOD (OR PERIOD AS AMENDED EARLIER IN THIS SPECIFICATION).

END OF SECTION

BUILDING DEPARTMENT NOTE: "THIS PLAN IS APPROVED ONLY FOR WORK INDICATED ON THE APPLICATION SPECIFICATION SHEET. ALL OTHER MATTERS SHOWN ARE NOT TO BE RELIED UPON, OR TO BE CONSIDERED AS EITHER BEING APPROVED OR IN ACCORDANCE WITH APPLICABLE CODES".

ALTERATION OR RE-USE OF THIS DRAWING FOR OTHER THAN THIS PROJECT WITHOUT WRITTEN CONSENT OF THE ABOVE ENGINEER IS PROHIBITED BY LAW.

Client:

RANGER PROPERTIES
4790 BROADWAY
NEW YORK, NY 10034

Architect:

FOGARTY FINGER
architecture | interiors

69 Walker St, New York, NY 10013
t 212 966 7450 f 212 966 7444

Library Architect:

Andrew Berman Architect, PLLC
77 Chambers Street, 4th Floor
New York, NY 10007
Tel 212.226.5998

Structural:

Thornton Tomasetti
51 Madison Avenue
New York, NY 10010
Tel 917.661.7800

MEP / FP:

Concessi Engineering, PC
499 7th Avenue, 11th Floor South Tower
New York, NY 10018
Tel 212.629.6810

FACADE:

SIMPSON GUMPERTZ & HEGER
550 7th Avenue, 10th Floor
New York, NY 10018
Tel 212.271.7000

CODE:

METROPOLIS
22 Courtland Street, 10th Floor
New York, NY 10007
Tel 212.233.6344

No.	Date	Issue
1	02/06/19	ISSUED FOR FILING / DD ESTIMATING

Project:

4790 BROADWAY
NEW YORK, NY 10034

Drawing Title:

FIRE ALARM
SPECIFICATIONS
SHEET #3 OF 3

Seal & Signature:

STATE OF NEW YORK · ROBERT J. CONGDON · No. 065705 · LICENSED PROFESSIONAL ENGINEER

DATE (MM-DD-YY):	11-02-2018
PROJECT No.:	7815.00
DRAWING BY:	TB
CHK BY:	RC
DWG. No.:	FA-103.00
CADD FILE No.:	–

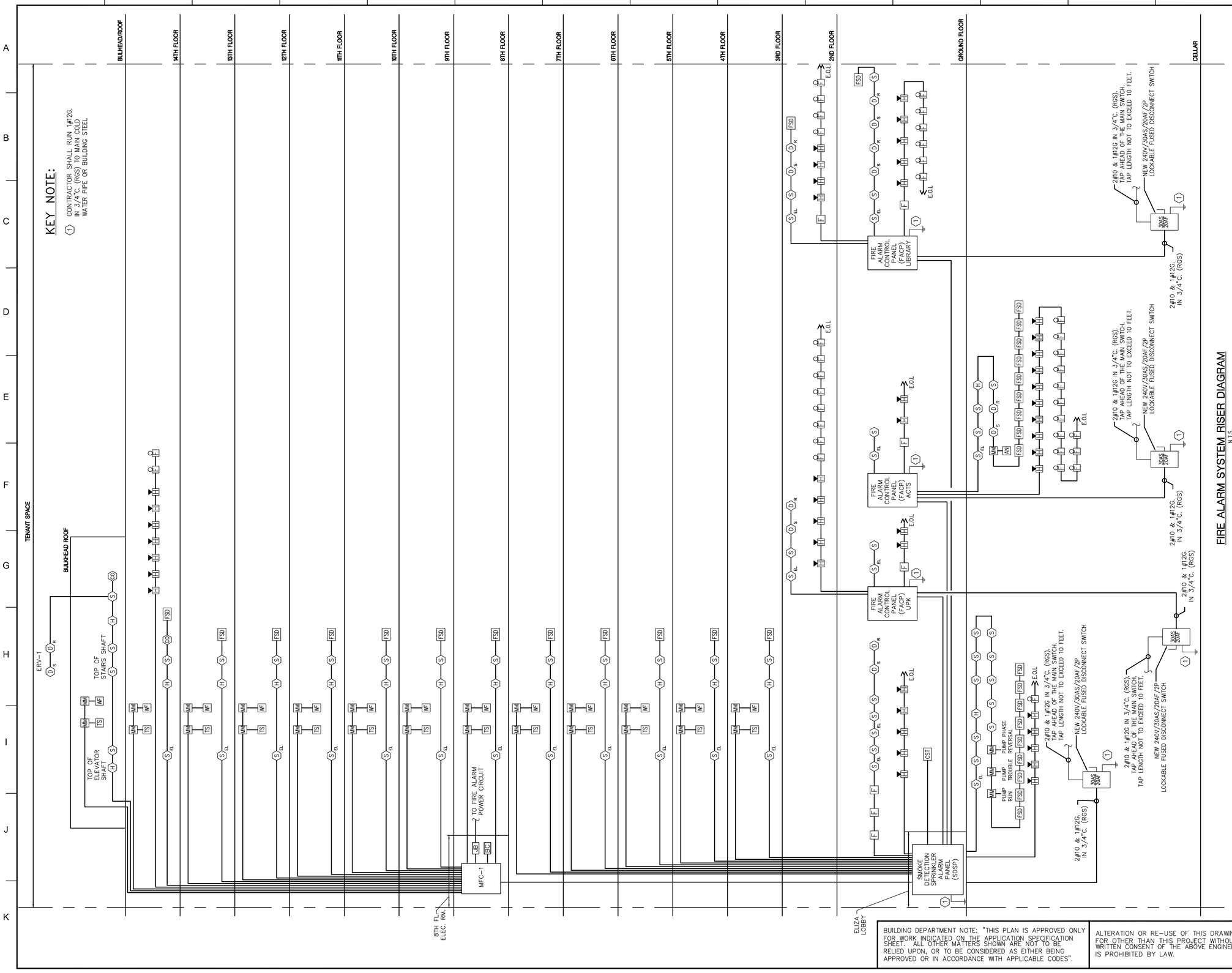

KEY NOTE:

1. CONTRACTOR SHALL RUN 1#12G. IN 3/4"C. (RGS) TO MAIN COLD WATER PIPE OR BUILDING STEEL

FIRE ALARM SYSTEM RISER DIAGRAM

N.T.S.

BUILDING DEPARTMENT NOTE: "THIS PLAN IS APPROVED ONLY FOR WORK INDICATED ON THE APPLICATION SPECIFICATION SHEET. ALL OTHER MATTERS SHOWN ARE NOT TO BE RELIED UPON, OR TO BE CONSIDERED AS EITHER BEING APPROVED OR IN ACCORDANCE WITH APPLICABLE CODES".

ALTERATION OR RE-USE OF THIS DRAWING FOR OTHER THAN THIS PROJECT WITHOUT WRITTEN CONSENT OF THE ABOVE ENGINEER IS PROHIBITED BY LAW.

Client:

RANGER PROPERTIES
4790 BROADWAY
NEW YORK, NY 10034

Architect:

FOGARTY FINGER architecture | interiors
69 Walker St, New York, NY 10013
t 212 966 7450 f 212 966 7444

Library Architect:

Andrew Berman Architect, PLLC
77 Chambers Street, 4th Floor
New York, NY 10007
Tel 212.226.5998

Structural:

Thornton Tomasetti
51 Madison Avenue
New York, NY 10010
Tel 917.661.7800

MEP / FP:

Concessi Engineering, PC
499 7th Avenue, 11th Floor South Tower
New York, NY 10018
Tel 212.629.6810

FACADE:

SIMPSON GUMPERTZ & HEGER
550 7th Avenue, 10th Floor
New York, NY 10018
Tel 212.271.7000

CODE:

METROPOLIS
22 Courtland Street, 10th Floor
New York, NY 10007
Tel 212.233.6344

No.	Date	Issue
1	02/06/19	ISSUED FOR FILING / DD ESTIMATING

Project:

4790 BROADWAY
NEW YORK, NY 10034

Drawing Title:

FIRE ALARM SYSTEM RISER DIAGRAM

Seal & Signature:

STATE OF NEW YORK · ROBERT L. CONGDON · No. 86705 · LICENSED PROFESSIONAL ENGINEER

DATE (MM-DD-YY):	11-02-2018
PROJECT No.:	7815.00
DRAWING BY:	TB
CHK. BY:	RC
DWG. No.:	FA-201.00
CADD FILE No.:	05 OF 15

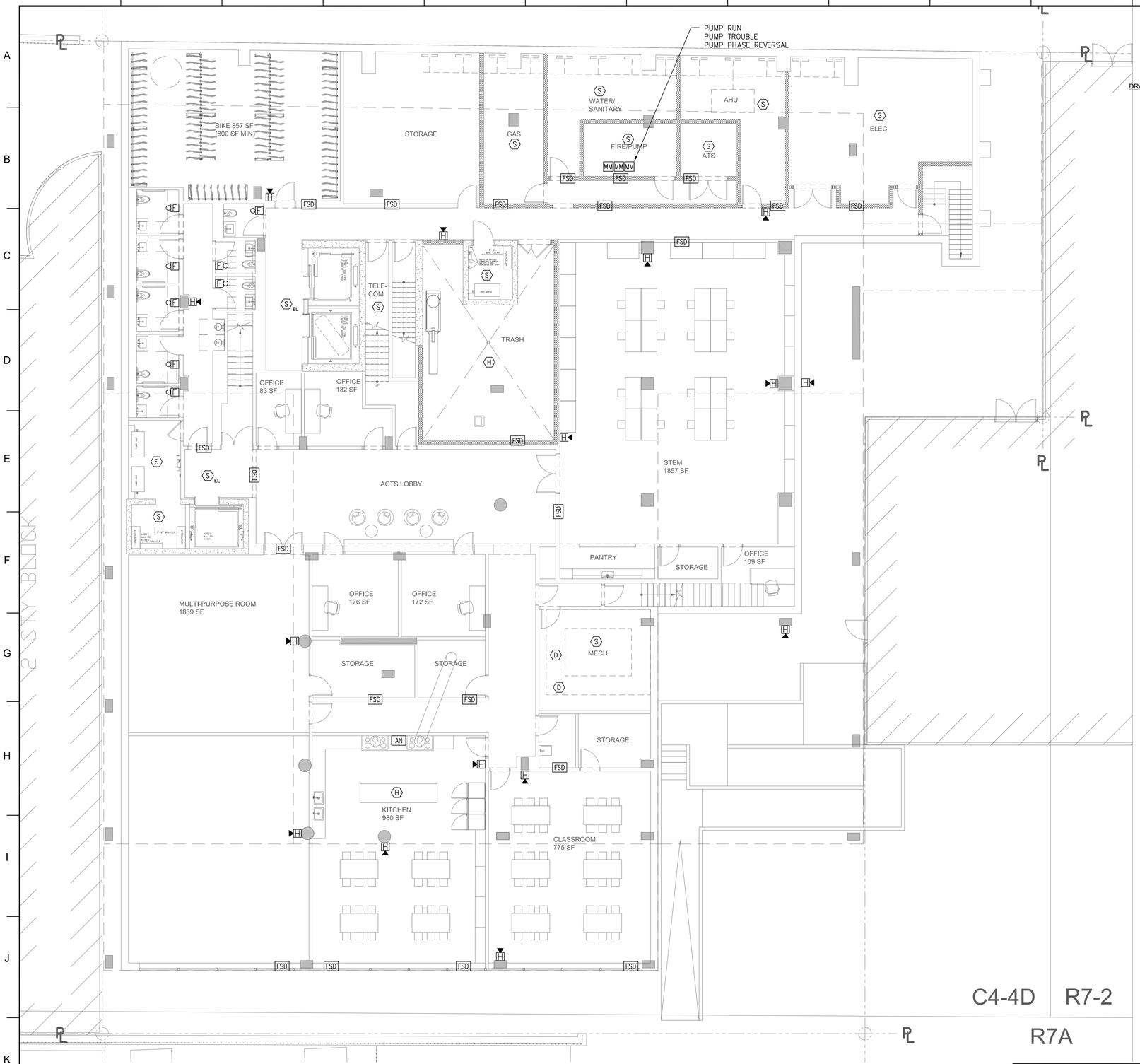

1 CELLAR FLOOR PLAN

SCALE: 1/8"=1'-0"

DRAWING NOTES:

1. REFER TO DRAWING FA-001.00 FOR FIRE ALARM NOTES, SYMBOLS, AND LEGEND.
2. REFER TO DRAWING FA-101.00, FA-102.00, AND FA-103.00 FOR FIRE ALARM SPECIFICATIONS.
3. THE DESIGN DEPICTED ON THIS DRAWING IS CONCEPTUAL, AND IS PROVIDED TO ILLUSTRATE A GENERAL BASIS-OF-DESIGN INTENT FOR THE PURPOSE OF RECEIVING A DESIGN/BUILD FIRE ALARM SYSTEM PROPOSAL FROM THE BIDDING CONTRACTOR FOR THE PROVISION OF A NEW FIRE ALARM SYSTEM.
4. ALL FIRE ALARM DEVICES (INITIATING DEVICES, VISUAL NOTIFICATION APPLIANCES, AUDIBLE NOTIFICATION APPLIANCES AND/OR AUDIBLE/VISUAL NOTIFICATION APPLIANCES) SHALL BE FURNISHED, INSTALLED, WIRED AND INTEGRATED WITH THE NEW BUILDING FIRE ALARM SYSTEM PER MANUFACTURER INSTRUCTIONS.
5. THE CONTRACTOR SHALL PLACE ALL PROPOSED EQUIPMENT AND FACILITIES IN A FULLY FUNCTIONAL STATE IN ACCORDANCE WITH NYC 2014 ELECTRICAL CODE AND IN ACCORDANCE WITH EQUIPMENT OEM INSTRUCTIONS. THE CONTRACTOR SHALL RECEIVE ALL APPROVALS AND INSPECTIONS FROM THE LOCAL AUTHORITY OF JURISDICTION.
6. THE CONTRACTOR SHALL FURNISH AND INSTALL THE FIRE ALARM SYSTEM IN ORDER TO ASSURE PROPER FIRE ALARM COVERAGE AND OPERATION PER THE NYC 2014 ELECTRICAL CODE AND THE NYC BUILDING CODE REGARDLESS OF WHAT IS SHOWN ON THE CONTRACT DRAWINGS. THE CONTRACTOR SHALL ADJUST ANY AND ALL DESIGN PARAMETERS TO MEET THE PROPER APPLICATION OF THE PROPOSED EQUIPMENT. THE CONTRACTOR SHALL BASE HIS BID ACCORDINGLY.
7. PRIOR TO THE COMMENCEMENT OF WORK, THE CONTRACTOR SHALL COORDINATE FINAL LOCATIONS OF ALL FIRE ALARM EQUIPMENT WITH ALL ARCHITECTURAL, MECHANICAL, PLUMBING AND ELECTRICAL DRAWINGS.
8. ALL FIRE ALARM NOTIFICATION DEVICES SHALL BE WALL MOUNTED WHERE POSSIBLE. ALL DEVICE ROUGH-IN BOXES SHALL BE FLUSH-MOUNTED IN ALL FINISHED SPACES UNLESS OTHERWISE REQUIRED BY THE EQUIPMENT MANUFACTURER.
9. THE CONTRACTOR SHALL PROVIDE BRAND NEW FIRE ALARM SYSTEM AS REQUIRED. THIS SHALL INCLUDE, HOWEVER NOT NECESSARILY BE LIMITED TO THE FOLLOWING:
   a. LOCATE THE NEW FIRE ALARM CONTROL PANEL (ON THE GROUND LEVEL LOBBY). CONFIRMATION OF COVERAGE AND ACCESSORY EQUIPMENT AS REQUIRED FOR A COMPLETE, OPERATIONAL AND COMPLIANT SYSTEM.
   b. FURNISH AND INSTALL ALL SYSTEM WIRING DEVICES AND MOUNTING ASSEMBLIES SUCH AS INITIATING MODULES, POWER SUPPLIES, DEVICE CABLE, RACEWAY, AND ROUGH-IN BOXES AS REQUIRED TO PLACE THE SYSTEM IN PROPER WORKING ORDER WITH THE NEW DEVICES SHOWN, PER MANUFACTURER'S INSTRUCTIONS. AT MINIMUM, PROVIDE ONE POWER SUPPLY UNIT WITH BATTERY BACKUP FOR EVERY 30 DEVICES ADDED TO THE NEW FIRE ALARM CONTROL PANEL, OR AS OTHERWISE RECOMMENDED BY THE FIRE ALARM MAINTENANCE CONTRACTOR. ALL POWER SUPPLY UNITS SHALL BE INSTALLED IN EXISTING ELECTRICAL EQUIPMENT SPACES. ALL NOTIFICATION APPLIANCE CIRCUITS SHALL BE SYNCHRONIZED TO COMPLY WITH NYC 2014 ELECTRICAL CODE. ALL CABLE/CABLE ASSEMBLY PROVISIONS SHALL BE LISTED FOR PLENUM USE.
   c. PROVIDE ALL DEVICE AND POWER TERMINATION WORK.
   d. PROVIDE ALL POWER WIRING, FACILITIES AND APPURTENANCES PER THE NYC 2014 ELECTRICAL CODE.
   e. NEW FIRE ALARM SYSTEM REPRESENTATIVE SHALL BE RETAINED FOR STARTUP AND VALIDATION THE ENTIRE NEW SYSTEM. REFER TO FIRE ALARM DWG. FA-001.00 FOR FIRE ALARM CONTACT INFORMATION.
   f. PROVIDE ALL TESTING AND COMMISSIONING REQUIRED FOR RECEIVING FINAL APPROVAL(S) BY THE LOCAL AUTHORITY OF JURISDICTION.
   g. PROVIDE A FIRE ALARM SYSTEM SUBMITTAL FOR THE PURPOSE OF RECEIVING A CONSTRUCTION PERMIT, AND FOR THE PURPOSE OF COORDINATION WITH THE LOCAL AUTHORITY OF JURISDICTION. THIS SHALL INCLUDE, HOWEVER NOT NECESSARILY BE LIMITED TO THE FOLLOWING: A COMPLETE AND DETAILED BILL OF MATERIALS, A COORDINATED EQUIPMENT LOCATION PLAN, STORAGE BATTERY CALCULATIONS, VOLTAGE DROP CALCULATIONS, AND A COORDINATED DEVICE INTERCONNECTION DIAGRAM.

BUILDING DEPARTMENT NOTE: "THIS PLAN IS APPROVED ONLY FOR WORK INDICATED ON THE APPLICATION SPECIFICATION SHEET. ALL OTHER MATTERS SHOWN ARE NOT TO BE RELIED UPON, OR TO BE CONSIDERED AS EITHER BEING APPROVED OR IN ACCORDANCE WITH APPLICABLE CODES".

ALTERATION OR RE-USE OF THIS DRAWING FOR OTHER THAN THIS PROJECT WITHOUT WRITTEN CONSENT OF THE ABOVE ENGINEER IS PROHIBITED BY LAW.

Client:

RANGER PROPERTIES
4790 BROADWAY
NEW YORK, NY 10034

Architect:

FOGARTY FINGER
architecture | interiors

69 Walker St, New York, NY 10013
t 212 966 7450 f 212 966 7444

Library Architect:

Andrew Berman Architect, PLLC
77 Chambers Street, 4th Floor
New York, NY 10007
Tel 212.226.5998

Structural:

Thornton Tomasetti
51 Madison Avenue
New York, NY 10010
Tel 917.661.7800

MEP / FP:

Concessi Engineering, PC
499 7th Avenue, 11th Floor South Tower
New York, NY 10018
Tel 212.629.6810

FACADE:

SIMPSON GUMPERTZ & HEGER
550 7th Avenue, 10th Floor
New York, NY 10018
Tel 212.271.7000

CODE:

METROPOLIS
22 Courtland Street, 10th Floor
New York, NY 10007
Tel 212.233.6344

No.	Date	Issue
1	02/06/19	ISSUED FOR FILING / DD ESTIMATING

Project:

4790 BROADWAY
NEW YORK, NY 10034

Drawing Title:

FIRE ALARM
CELLAR FLOOR PLAN

Seal & Signature:

STATE OF NEW YORK · ROBERT V. CONGEMI · No. 86705 · LICENSED PROFESSIONAL ENGINEER

DATE (MM-DD-YY):	11-02-2018
PROJECT No.:	7815.00
DRAWING BY:	TB
CHK BY:	RC
DWG. No.:	FA-300.00
CADD FILE No.:	–

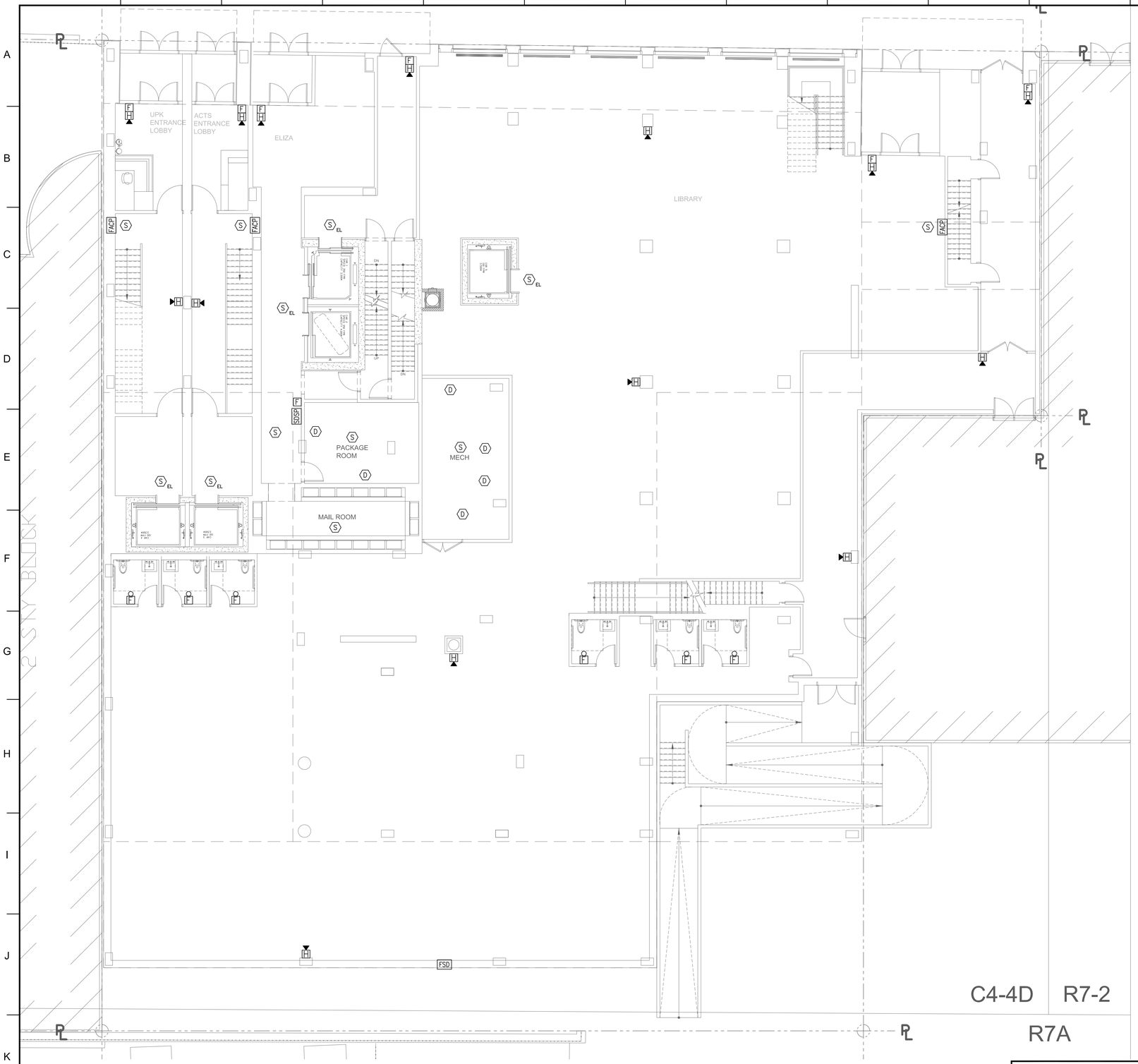

1 1ST FLOOR PLAN
SCALE: 1/8"=1'-0"

DRAWING NOTES:

1. REFER TO DRAWING FA-001.00 FOR FIRE ALARM NOTES, SYMBOLS, AND LEGEND.
2. REFER TO DRAWING FA-101.00, FA-102.00, AND FA-103.00 FOR FIRE ALARM SPECIFICATIONS.
3. THE DESIGN DEPICTED ON THIS DRAWING IS CONCEPTUAL, AND IS PROVIDED TO ILLUSTRATE A GENERAL BASIS-OF-DESIGN INTENT FOR THE PURPOSE OF RECEIVING A DESIGN/BUILD FIRE ALARM SYSTEM PROPOSAL FROM THE BIDDING CONTRACTOR FOR THE PROVISION OF A NEW FIRE ALARM SYSTEM.
4. ALL FIRE ALARM DEVICES (INITIATING DEVICES, VISUAL NOTIFICATION APPLIANCES, AUDIBLE NOTIFICATION APPLIANCES AND/OR AUDIBLE/VISUAL NOTIFICATION APPLIANCES) SHALL BE FURNISHED, INSTALLED, WIRED AND INTEGRATED WITH THE NEW BUILDING FIRE ALARM SYSTEM PER MANUFACTURER INSTRUCTIONS.
5. THE CONTRACTOR SHALL PLACE ALL PROPOSED EQUIPMENT AND FACILITIES IN A FULLY FUNCTIONAL STATE IN ACCORDANCE WITH NYC 2014 ELECTRICAL CODE AND IN ACCORDANCE WITH EQUIPMENT OEM INSTRUCTIONS. THE CONTRACTOR SHALL RECEIVE ALL APPROVALS AND INSPECTIONS FROM THE LOCAL AUTHORITY OF JURISDICTION.
6. THE CONTRACTOR SHALL FURNISH AND INSTALL THE FIRE ALARM SYSTEM IN ORDER TO ASSURE PROPER FIRE ALARM COVERAGE AND OPERATION PER THE NYC 2014 ELECTRICAL CODE AND THE NYC BUILDING CODE REGARDLESS OF WHAT IS SHOWN ON THE CONTRACT DRAWINGS. THE CONTRACTOR SHALL ADJUST ANY AND ALL DESIGN PARAMETERS TO MEET THE PROPER APPLICATION OF THE PROPOSED EQUIPMENT. THE CONTRACTOR SHALL BASE HIS BID ACCORDINGLY.
7. PRIOR TO THE COMMENCEMENT OF WORK, THE CONTRACTOR SHALL COORDINATE FINAL LOCATIONS OF ALL FIRE ALARM EQUIPMENT WITH ALL ARCHITECTURAL, MECHANICAL, PLUMBING AND ELECTRICAL DRAWINGS.
8. ALL FIRE ALARM NOTIFICATION DEVICES SHALL BE WALL MOUNTED WHERE POSSIBLE. ALL DEVICE ROUGH-IN BOXES SHALL BE FLUSH-MOUNTED IN ALL FINISHED SPACES UNLESS OTHERWISE REQUIRED BY THE EQUIPMENT MANUFACTURER.
9. THE CONTRACTOR SHALL PROVIDE BRAND NEW FIRE ALARM SYSTEM AS REQUIRED. THIS SHALL INCLUDE, HOWEVER NOT NECESSARILY BE LIMITED TO THE FOLLOWING:
   a. LOCATE THE NEW FIRE ALARM CONTROL PANEL (ON THE GROUND LEVEL LOBBY). CONFIRMATION OF COVERAGE AND ACCESSORY EQUIPMENT AS REQUIRED FOR A COMPLETE, OPERATIONAL AND COMPLIANT SYSTEM.
   b. FURNISH AND INSTALL ALL SYSTEM WIRING DEVICES AND MOUNTING ASSEMBLIES SUCH AS INITIATING MODULES, POWER SUPPLIES, DEVICE CABLE, RACEWAY, AND ROUGH-IN BOXES AS REQUIRED TO PLACE THE SYSTEM IN PROPER WORKING ORDER WITH THE NEW DEVICES SHOWN, PER MANUFACTURER'S INSTRUCTIONS. AT MINIMUM, PROVIDE ONE POWER SUPPLY UNIT WITH BATTERY BACKUP FOR EVERY 30 DEVICES ADDED TO THE NEW FIRE ALARM CONTROL PANEL, OR AS OTHERWISE RECOMMENDED BY THE FIRE ALARM MAINTENANCE CONTRACTOR. ALL POWER SUPPLY UNITS SHALL BE INSTALLED IN EXISTING ELECTRICAL EQUIPMENT SPACES. ALL NOTIFICATION APPLIANCE CIRCUITS SHALL BE SYNCHRONIZED TO COMPLY WITH NYC 2014 ELECTRICAL CODE. ALL CABLE/CABLE ASSEMBLY PROVISIONS SHALL BE LISTED FOR PLENUM USE.
   c. PROVIDE ALL DEVICE AND POWER TERMINATION WORK.
   d. PROVIDE ALL POWER WIRING, FACILITIES AND APPURTENANCES PER THE NYC 2014 ELECTRICAL CODE.
   e. NEW FIRE ALARM SYSTEM REPRESENTATIVE SHALL BE RETAINED FOR STARTUP AND VALIDATION THE ENTIRE NEW SYSTEM. REFER TO FIRE ALARM DWG. FA-001.00 FOR FIRE ALARM CONTACT INFORMATION.
   f. PROVIDE ALL TESTING AND COMMISSIONING REQUIRED FOR RECEIVING FINAL APPROVAL(S) BY THE LOCAL AUTHORITY OF JURISDICTION.
   g. PROVIDE A FIRE ALARM SYSTEM SUBMITTAL FOR THE PURPOSE OF RECEIVING A CONSTRUCTION PERMIT, AND FOR THE PURPOSE OF COORDINATION WITH THE LOCAL AUTHORITY OF JURISDICTION. THIS SHALL INCLUDE, HOWEVER NOT NECESSARILY BE LIMITED TO THE FOLLOWING: A COMPLETE AND DETAILED BILL OF MATERIALS, A COORDINATED EQUIPMENT LOCATION PLAN, STORAGE BATTERY CALCULATIONS, VOLTAGE DROP CALCULATIONS, AND A COORDINATED DEVICE INTERCONNECTION DIAGRAM.

BUILDING DEPARTMENT NOTE: "THIS PLAN IS APPROVED ONLY FOR WORK INDICATED ON THE APPLICATION SPECIFICATION SHEET. ALL OTHER MATTERS SHOWN ARE NOT TO BE RELIED UPON, OR TO BE CONSIDERED AS EITHER BEING APPROVED OR IN ACCORDANCE WITH APPLICABLE CODES".

ALTERATION OR RE-USE OF THIS DRAWING FOR OTHER THAN THIS PROJECT WITHOUT WRITTEN CONSENT OF THE ABOVE ENGINEER IS PROHIBITED BY LAW.

Client:
RANGER PROPERTIES
4790 BROADWAY
NEW YORK, NY 10034

Architect:
FOGARTY FINGER architecture | interiors
69 Walker St, New York, NY 10013
t 212 966 7450 f 212 966 7444

Library Architect:
Andrew Berman Architect, PLLC
77 Chambers Street, 4th Floor
New York, NY 10007
Tel 212.226.5998

Structural:
Thornton Tomasetti
51 Madison Avenue
New York, NY 10010
Tel 917.661.7800

MEP / FP:
Concessi Engineering, PC
499 7th Avenue, 11th Floor South Tower
New York, NY 10018
Tel 212.629.6810

FACADE:
SIMPSON GUMPERTZ & HEGER
550 7th Avenue, 10th Floor
New York, NY 10018
Tel 212.271.7000

CODE:
METROPOLIS
22 Courtland Street, 10th Floor
New York, NY 10007
Tel 212.233.6344

No.	Date	Issue
1	02/06/19	ISSUED FOR FILING / DD ESTIMATING

Project:
4790 BROADWAY
NEW YORK, NY 10034

Drawing Title:
FIRE ALARM
GROUND FLOOR PLAN

Seal & Signature:
STATE OF NEW YORK · ROBERT T. CONCESSI · No. 86705 · LICENSED PROFESSIONAL ENGINEER

DATE (MM-DD-YY):	11-02-2018
PROJECT No.:	7815.00
DRAWING BY:	TB
CHK BY:	RC
DWG. No.:	FA-301.00
CADD FILE No.:	–
	07 OF 15

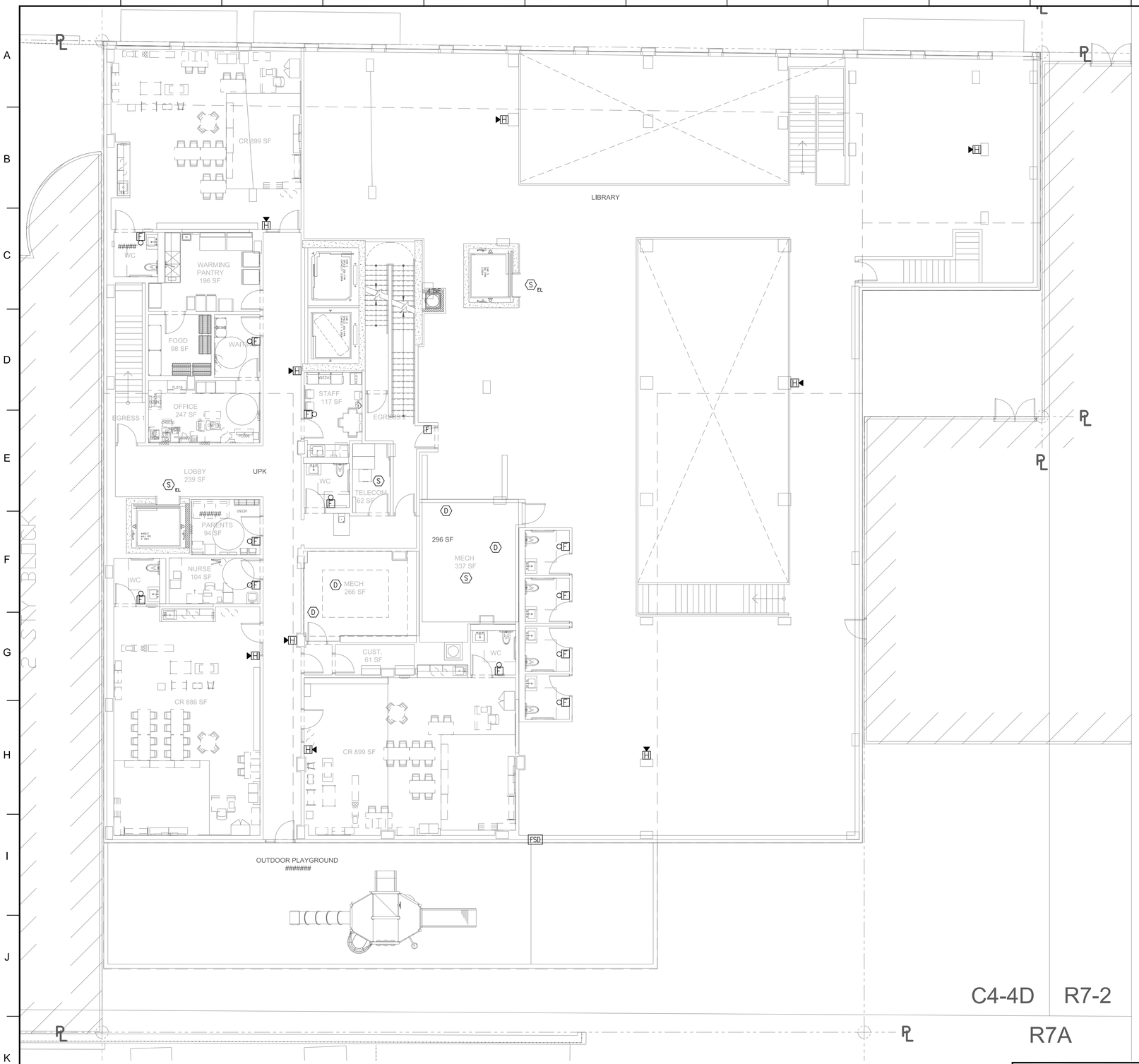

1 2ND FLOOR PLAN

SCALE: 1/8"=1'-0"

DRAWING NOTES:

1. REFER TO DRAWING FA–001.00 FOR FIRE ALARM NOTES, SYMBOLS, AND LEGEND.
2. REFER TO DRAWING FA–101.00, FA–102.00, AND FA–103.00 FOR FIRE ALARM SPECIFICATIONS.
3. THE DESIGN DEPICTED ON THIS DRAWING IS CONCEPTUAL, AND IS PROVIDED TO ILLUSTRATE A GENERAL BASIS–OF–DESIGN INTENT FOR THE PURPOSE OF RECEIVING A DESIGN/BUILD FIRE ALARM SYSTEM PROPOSAL FROM THE BIDDING CONTRACTOR FOR THE PROVISION OF A NEW FIRE ALARM SYSTEM.
4. ALL FIRE ALARM DEVICES (INITIATING DEVICES, VISUAL NOTIFICATION APPLIANCES, AUDIBLE NOTIFICATION APPLIANCES AND/OR AUDIBLE/VISUAL NOTIFICATION APPLIANCES) SHALL BE FURNISHED, INSTALLED, WIRED AND INTEGRATED WITH THE NEW BUILDING FIRE ALARM SYSTEM PER MANUFACTURER INSTRUCTIONS.
5. THE CONTRACTOR SHALL PLACE ALL PROPOSED EQUIPMENT AND FACILITIES IN A FULLY FUNCTIONAL STATE IN ACCORDANCE WITH NYC 2014 ELECTRICAL CODE AND IN ACCORDANCE WITH EQUIPMENT OEM INSTRUCTIONS. THE CONTRACTOR SHALL RECEIVE ALL APPROVALS AND INSPECTIONS FROM THE LOCAL AUTHORITY OF JURISDICTION.
6. THE CONTRACTOR SHALL FURNISH AND INSTALL THE FIRE ALARM SYSTEM IN ORDER TO ASSURE PROPER FIRE ALARM COVERAGE AND OPERATION PER THE NYC 2014 ELECTRICAL CODE AND THE NYC BUILDING CODE REGARDLESS OF WHAT IS SHOWN ON THE CONTRACT DRAWINGS. THE CONTRACTOR SHALL ADJUST ANY AND ALL DESIGN PARAMETERS TO MEET THE PROPER APPLICATION OF THE PROPOSED EQUIPMENT. THE CONTRACTOR SHALL BASE HIS BID ACCORDINGLY.
7. PRIOR TO THE COMMENCEMENT OF WORK, THE CONTRACTOR SHALL COORDINATE FINAL LOCATIONS OF ALL FIRE ALARM EQUIPMENT WITH ALL ARCHITECTURAL, MECHANICAL, PLUMBING AND ELECTRICAL DRAWINGS.
8. ALL FIRE ALARM NOTIFICATION DEVICES SHALL BE WALL MOUNTED WHERE POSSIBLE. ALL DEVICE ROUGH–IN BOXES SHALL BE FLUSH–MOUNTED IN ALL FINISHED SPACES UNLESS OTHERWISE REQUIRED BY THE EQUIPMENT MANUFACTURER.
9. THE CONTRACTOR SHALL PROVIDE BRAND NEW FIRE ALARM SYSTEM AS REQUIRED. THIS SHALL INCLUDE, HOWEVER NOT NECESSARILY BE LIMITED TO THE FOLLOWING:
   a. LOCATE THE NEW FIRE ALARM CONTROL PANEL (ON THE GROUND LEVEL LOBBY). CONFIRMATION OF COVERAGE AND ACCESSORY EQUIPMENT AS REQUIRED FOR A COMPLETE, OPERATIONAL AND COMPLIANT SYSTEM.
   b. FURNISH AND INSTALL ALL SYSTEM WIRING DEVICES AND MOUNTING ASSEMBLIES SUCH AS INITIATING MODULES, POWER SUPPLIES, DEVICE CABLE, RACEWAY, AND ROUGH–IN BOXES AS REQUIRED TO PLACE THE SYSTEM IN PROPER WORKING ORDER WITH THE NEW DEVICES SHOWN, PER MANUFACTURER'S INSTRUCTIONS. AT MINIMUM, PROVIDE ONE POWER SUPPLY UNIT WITH BATTERY BACKUP FOR EVERY 30 DEVICES ADDED TO THE NEW FIRE ALARM CONTROL PANEL, OR AS OTHERWISE RECOMMENDED BY THE FIRE ALARM MAINTENANCE CONTRACTOR. ALL POWER SUPPLY UNITS SHALL BE INSTALLED IN EXISTING ELECTRICAL EQUIPMENT SPACES. ALL NOTIFICATION APPLIANCE CIRCUITS SHALL BE SYNCHRONIZED TO COMPLY WITH NYC 2014 ELECTRICAL CODE. ALL CABLE/CABLE ASSEMBLY PROVISIONS SHALL BE LISTED FOR PLENUM USE.
   c. PROVIDE ALL DEVICE AND POWER TERMINATION WORK.
   d. PROVIDE ALL POWER WIRING, FACILITIES AND APPURTENANCES PER THE NYC 2014 ELECTRICAL CODE.
   e. NEW FIRE ALARM SYSTEM REPRESENTATIVE SHALL BE RETAINED FOR STARTUP AND VALIDATION THE ENTIRE NEW SYSTEM. REFER TO FIRE ALARM DWG. FA–001.00 FOR FIRE ALARM CONTACT INFORMATION.
   f. PROVIDE ALL TESTING AND COMMISSIONING REQUIRED FOR RECEIVING FINAL APPROVAL(S) BY THE LOCAL AUTHORITY OF JURISDICTION.
   g. PROVIDE A FIRE ALARM SYSTEM SUBMITTAL FOR THE PURPOSE OF RECEIVING A CONSTRUCTION PERMIT, AND FOR THE PURPOSE OF COORDINATION WITH THE LOCAL AUTHORITY OF JURISDICTION. THIS SHALL INCLUDE, HOWEVER NOT NECESSARILY BE LIMITED TO THE FOLLOWING: A COMPLETE AND DETAILED BILL OF MATERIALS, A COORDINATED EQUIPMENT LOCATION PLAN, STORAGE BATTERY CALCULATIONS, VOLTAGE DROP CALCULATIONS, AND A COORDINATED DEVICE INTERCONNECTION DIAGRAM.

BUILDING DEPARTMENT NOTE: "THIS PLAN IS APPROVED ONLY FOR WORK INDICATED ON THE APPLICATION SPECIFICATION SHEET. ALL OTHER MATTERS SHOWN ARE NOT TO BE RELIED UPON, OR TO BE CONSIDERED AS EITHER BEING APPROVED OR IN ACCORDANCE WITH APPLICABLE CODES".

ALTERATION OR RE–USE OF THIS DRAWING FOR OTHER THAN THIS PROJECT WITHOUT WRITTEN CONSENT OF THE ABOVE ENGINEER IS PROHIBITED BY LAW.

Client:

RANGER PROPERTIES
4790 BROADWAY
NEW YORK, NY 10034

Architect:

FOGARTY FINGER
architecture | interiors

69 Walker St, New York, NY 10013
t 212 966 7450 f 212 966 7444

Library Architect:

Andrew Berman Architect, PLLC
77 Chambers Street, 4th Floor
New York, NY 10007
Tel 212.226.5998

Structural:

Thornton Tomasetti
51 Madison Avenue
New York, NY 10010
Tel 917.661.7800

MEP / FP:

Concessi Engineering, PC
499 7th Avenue, 11th Floor South Tower
New York, NY 10018
Tel 212.629.6810

FACADE:

SIMPSON GUMPERTZ & HEGER
550 7th Avenue, 10th Floor
New York, NY 10018
Tel 212.271.7000

CODE:

METROPOLIS
22 Courtland Street, 10th Floor
New York, NY 10007
Tel 212.233.6344

No.	Date	Issue
1	02/06/19	ISSUED FOR FILING / DD ESTIMATING

Project:

4790 BROADWAY
NEW YORK, NY 10034

Drawing Title:

FIRE ALARM
SECOND FLOOR PLAN

Seal & Signature:

STATE OF NEW YORK · ROBERT V. CONCESSI · No. 86705 · LICENSED PROFESSIONAL ENGINEER

DATE (MM–DD–YY):	11–02–2018
PROJECT No.:	7815.00
DRAWING BY:	TB
CHK BY:	RC
DWG. No.:	FA–302.00
CADD FILE No.:	–

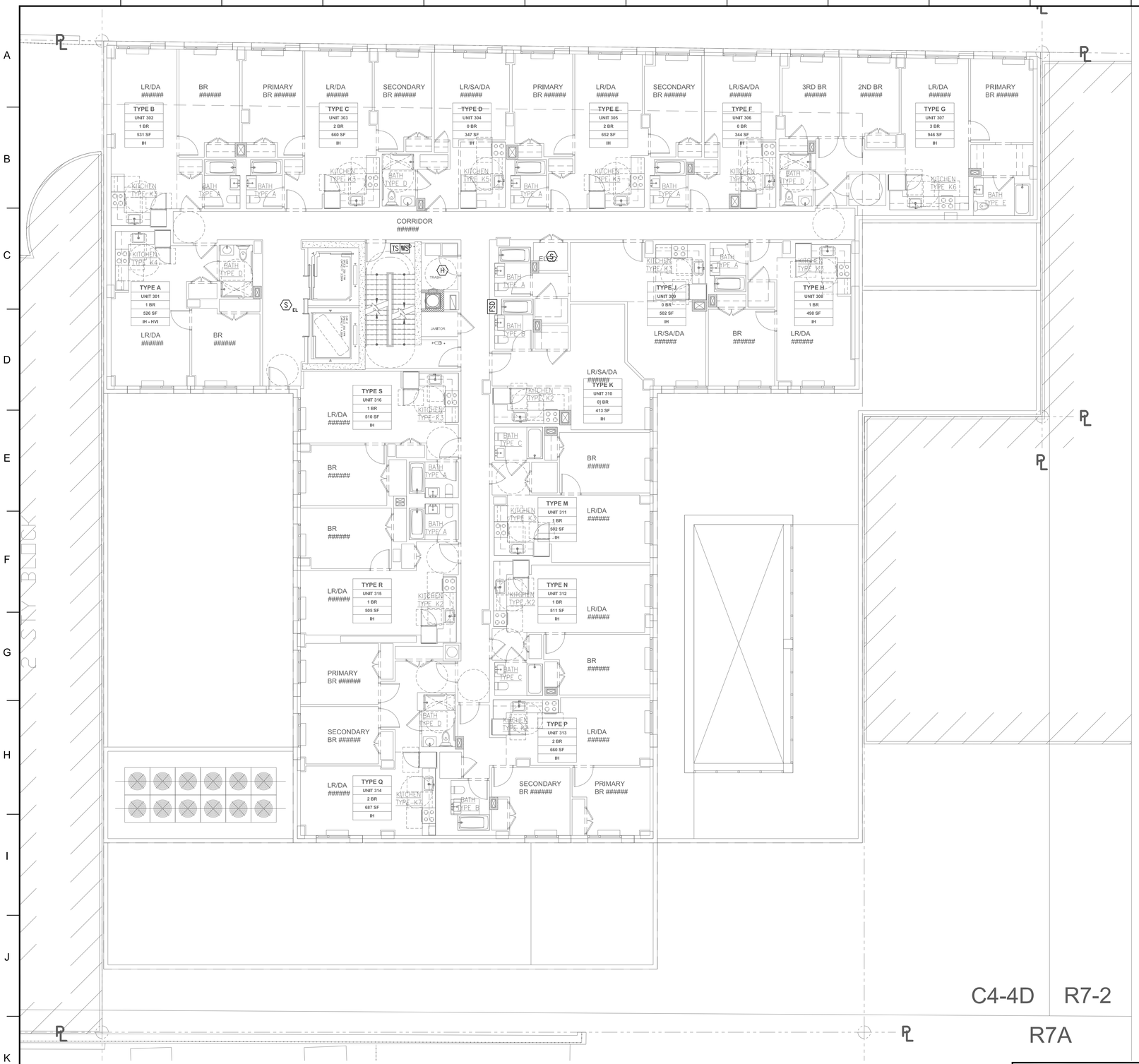

1 3RD FLOOR PLAN

SCALE: 1/8"=1'-0"

DRAWING NOTES:

1. REFER TO DRAWING FA-001.00 FOR FIRE ALARM NOTES, SYMBOLS, AND LEGEND.
2. REFER TO DRAWING FA-101.00, FA-102.00, AND FA-103.00 FOR FIRE ALARM SPECIFICATIONS.
3. THE DESIGN DEPICTED ON THIS DRAWING IS CONCEPTUAL, AND IS PROVIDED TO ILLUSTRATE A GENERAL BASIS-OF-DESIGN INTENT FOR THE PURPOSE OF RECEIVING A DESIGN/BUILD FIRE ALARM SYSTEM PROPOSAL FROM THE BIDDING CONTRACTOR FOR THE PROVISION OF A NEW FIRE ALARM SYSTEM.
4. ALL FIRE ALARM DEVICES (INITIATING DEVICES, VISUAL NOTIFICATION APPLIANCES, AUDIBLE NOTIFICATION APPLIANCES AND/OR AUDIBLE/VISUAL NOTIFICATION APPLIANCES) SHALL BE FURNISHED, INSTALLED, WIRED AND INTEGRATED WITH THE NEW BUILDING FIRE ALARM SYSTEM PER MANUFACTURER INSTRUCTIONS.
5. THE CONTRACTOR SHALL PLACE ALL PROPOSED EQUIPMENT AND FACILITIES IN A FULLY FUNCTIONAL STATE IN ACCORDANCE WITH NYC 2014 ELECTRICAL CODE AND IN ACCORDANCE WITH EQUIPMENT OEM INSTRUCTIONS. THE CONTRACTOR SHALL RECEIVE ALL APPROVALS AND INSPECTIONS FROM THE LOCAL AUTHORITY OF JURISDICTION.
6. THE CONTRACTOR SHALL FURNISH AND INSTALL THE FIRE ALARM SYSTEM IN ORDER TO ASSURE PROPER FIRE ALARM COVERAGE AND OPERATION PER THE NYC 2014 ELECTRICAL CODE AND THE NYC BUILDING CODE REGARDLESS OF WHAT IS SHOWN ON THE CONTRACT DRAWINGS. THE CONTRACTOR SHALL ADJUST ANY AND ALL DESIGN PARAMETERS TO MEET THE PROPER APPLICATION OF THE PROPOSED EQUIPMENT. THE CONTRACTOR SHALL BASE HIS BID ACCORDINGLY.
7. PRIOR TO THE COMMENCEMENT OF WORK, THE CONTRACTOR SHALL COORDINATE FINAL LOCATIONS OF ALL FIRE ALARM EQUIPMENT WITH ALL ARCHITECTURAL, MECHANICAL, PLUMBING AND ELECTRICAL DRAWINGS.
8. ALL FIRE ALARM NOTIFICATION DEVICES SHALL BE WALL MOUNTED WHERE POSSIBLE. ALL DEVICE ROUGH-IN BOXES SHALL BE FLUSH-MOUNTED IN ALL FINISHED SPACES UNLESS OTHERWISE REQUIRED BY THE EQUIPMENT MANUFACTURER.
9. THE CONTRACTOR SHALL PROVIDE BRAND NEW FIRE ALARM SYSTEM AS REQUIRED. THIS SHALL INCLUDE, HOWEVER NOT NECESSARILY BE LIMITED TO THE FOLLOWING:
   a. LOCATE THE NEW FIRE ALARM CONTROL PANEL (ON THE GROUND LEVEL LOBBY). CONFIRMATION OF COVERAGE AND ACCESSORY EQUIPMENT AS REQUIRED FOR A COMPLETE, OPERATIONAL AND COMPLIANT SYSTEM.
   b. FURNISH AND INSTALL ALL SYSTEM WIRING DEVICES AND MOUNTING ASSEMBLIES SUCH AS INITIATING MODULES, POWER SUPPLIES, DEVICE CABLE, RACEWAY, AND ROUGH-IN BOXES AS REQUIRED TO PLACE THE SYSTEM IN PROPER WORKING ORDER WITH THE NEW DEVICES SHOWN, PER MANUFACTURER'S INSTRUCTIONS. AT MINIMUM, PROVIDE ONE POWER SUPPLY UNIT WITH BATTERY BACKUP FOR EVERY 30 DEVICES ADDED TO THE NEW FIRE ALARM CONTROL PANEL, OR AS OTHERWISE RECOMMENDED BY THE FIRE ALARM MAINTENANCE CONTRACTOR. ALL POWER SUPPLY UNITS SHALL BE INSTALLED IN EXISTING ELECTRICAL EQUIPMENT SPACES. ALL NOTIFICATION APPLIANCE CIRCUITS SHALL BE SYNCHRONIZED TO COMPLY WITH NYC 2014 ELECTRICAL CODE. ALL CABLE/CABLE ASSEMBLY PROVISIONS SHALL BE LISTED FOR PLENUM USE.
   c. PROVIDE ALL DEVICE AND POWER TERMINATION WORK.
   d. PROVIDE ALL POWER WIRING, FACILITIES AND APPURTENANCES PER THE NYC 2014 ELECTRICAL CODE.
   e. NEW FIRE ALARM SYSTEM REPRESENTATIVE SHALL BE RETAINED FOR STARTUP AND VALIDATION THE ENTIRE NEW SYSTEM. REFER TO FIRE ALARM DWG. FA-001.00 FOR FIRE ALARM CONTACT INFORMATION.
   f. PROVIDE ALL TESTING AND COMMISSIONING REQUIRED FOR RECEIVING FINAL APPROVAL(S) BY THE LOCAL AUTHORITY OF JURISDICTION.
   g. PROVIDE A FIRE ALARM SYSTEM SUBMITTAL FOR THE PURPOSE OF RECEIVING A CONSTRUCTION PERMIT, AND FOR THE PURPOSE OF COORDINATION WITH THE LOCAL AUTHORITY OF JURISDICTION. THIS SHALL INCLUDE, HOWEVER NOT NECESSARILY BE LIMITED TO THE FOLLOWING: A COMPLETE AND DETAILED BILL OF MATERIALS, A COORDINATED EQUIPMENT LOCATION PLAN, STORAGE BATTERY CALCULATIONS, VOLTAGE DROP CALCULATIONS, AND A COORDINATED DEVICE INTERCONNECTION DIAGRAM.

BUILDING DEPARTMENT NOTE: "THIS PLAN IS APPROVED ONLY FOR WORK INDICATED ON THE APPLICATION SPECIFICATION SHEET. ALL OTHER MATTERS SHOWN ARE NOT TO BE RELIED UPON, OR TO BE CONSIDERED AS EITHER BEING APPROVED OR IN ACCORDANCE WITH APPLICABLE CODES".

ALTERATION OR RE-USE OF THIS DRAWING FOR OTHER THAN THIS PROJECT WITHOUT WRITTEN CONSENT OF THE ABOVE ENGINEER IS PROHIBITED BY LAW.

Client:

RANGER PROPERTIES
4790 BROADWAY
NEW YORK, NY 10034

Architect:

FOGARTY FINGER architecture | interiors

69 Walker St, New York, NY 10013
t 212 966 7450 f 212 966 7444

Library Architect:

Andrew Berman Architect, PLLC
77 Chambers Street, 4th Floor
New York, NY 10007
Tel 212.226.5998

Structural:

Thornton Tomasetti
51 Madison Avenue
New York, NY 10010
Tel 917.661.7800

MEP / FP:

Concessi Engineering, PC
499 7th Avenue, 11th Floor South Tower
New York, NY 10018
Tel 212.629.6810

FACADE:

SIMPSON GUMPERTZ & HEGER
550 7th Avenue, 10th Floor
New York, NY 10018
Tel 212.271.7000

CODE:

METROPOLIS
22 Courtland Street, 10th Floor
New York, NY 10007
Tel 212.233.6344

No.	Date	Issue
1	02/06/19	ISSUED FOR FILING / DD ESTIMATING

Project:

4790 BROADWAY
NEW YORK, NY 10034

Drawing Title:

FIRE ALARM
3RD FLOOR PLAN

Seal & Signature:

STATE OF NEW YORK · ROBERT V. CONGERO · No. 86705 · LICENSED PROFESSIONAL ENGINEER

DATE (MM-DD-YY):	11-02-2018
PROJECT No.:	7815.00
DRAWING BY:	TB
CHK BY:	RC
DWG. No.:	FA-303.00
CADD FILE No.:	09 OF 15

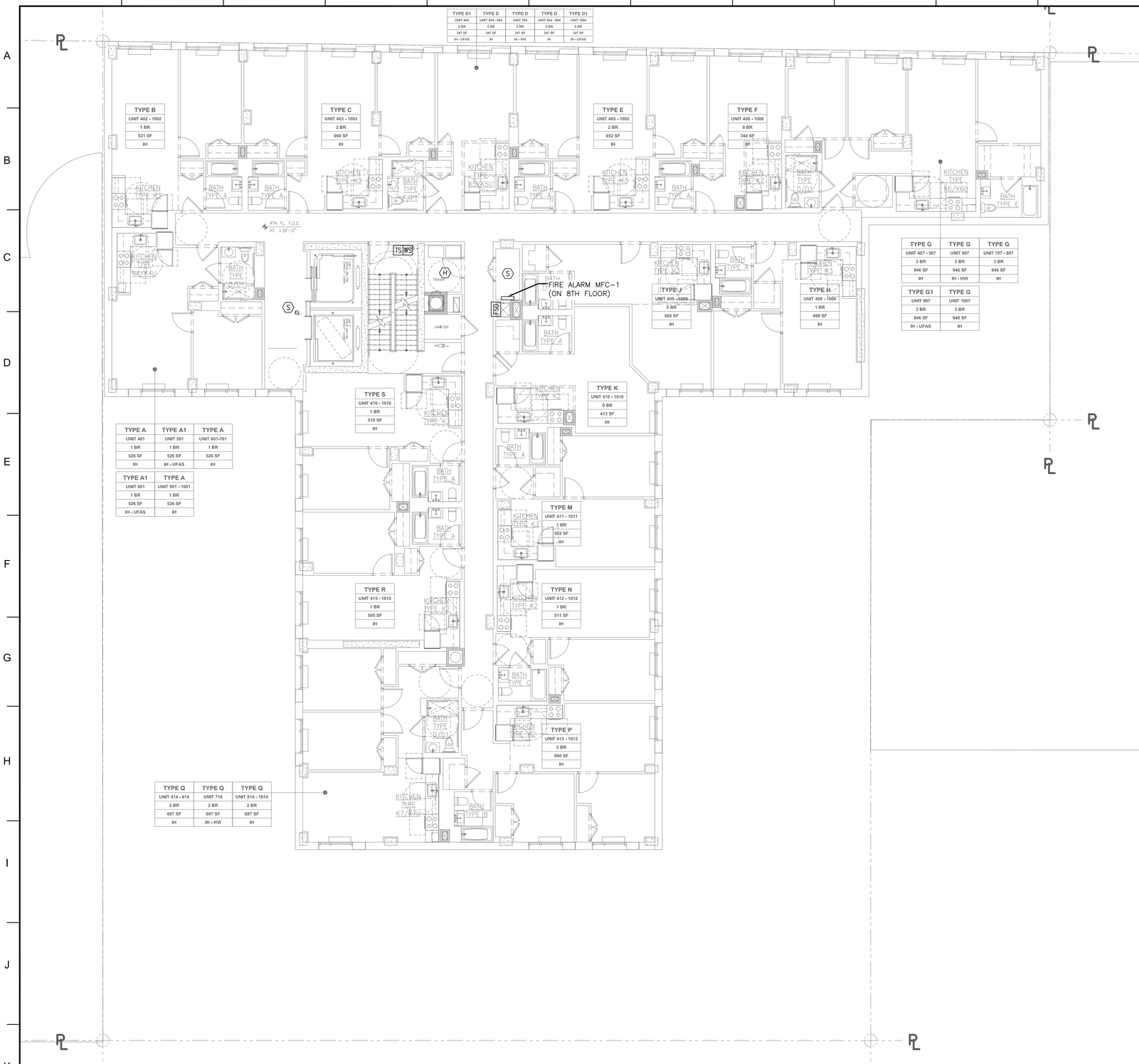

1 4TH - 10TH FLOOR PLAN

SCALE: 1/8"=1'-0"

DRAWING NOTES:

1. REFER TO DRAWING FA-001.00 FOR FIRE ALARM NOTES, SYMBOLS, AND LEGEND.
2. REFER TO DRAWING FA-101.00, FA-102.00, AND FA-103.00 FOR FIRE ALARM SPECIFICATIONS.
3. THE DESIGN DEPICTED ON THIS DRAWING IS CONCEPTUAL, AND IS PROVIDED TO ILLUSTRATE A GENERAL BASIS-OF-DESIGN INTENT FOR THE PURPOSE OF RECEIVING A DESIGN/BUILD FIRE ALARM SYSTEM PROPOSAL FROM THE BIDDING CONTRACTOR FOR THE PROVISION OF A NEW FIRE ALARM SYSTEM.
4. ALL FIRE ALARM DEVICES (INITIATING DEVICES, VISUAL NOTIFICATION APPLIANCES, AUDIBLE NOTIFICATION APPLIANCES AND/OR AUDIBLE/VISUAL NOTIFICATION APPLIANCES) SHALL BE FURNISHED, INSTALLED, WIRED AND INTEGRATED WITH THE NEW BUILDING FIRE ALARM SYSTEM PER MANUFACTURER INSTRUCTIONS.
5. THE CONTRACTOR SHALL PLACE ALL PROPOSED EQUIPMENT AND FACILITIES IN A FULLY FUNCTIONAL STATE IN ACCORDANCE WITH NYC 2014 ELECTRICAL CODE AND IN ACCORDANCE WITH EQUIPMENT OEM INSTRUCTIONS. THE CONTRACTOR SHALL RECEIVE ALL APPROVALS AND INSPECTIONS FROM THE LOCAL AUTHORITY OF JURISDICTION.
6. THE CONTRACTOR SHALL FURNISH AND INSTALL THE FIRE ALARM SYSTEM IN ORDER TO ASSURE PROPER FIRE ALARM COVERAGE AND OPERATION PER THE NYC 2014 ELECTRICAL CODE AND THE NYC BUILDING CODE REGARDLESS OF WHAT IS SHOWN ON THE CONTRACT DRAWINGS. THE CONTRACTOR SHALL ADJUST ANY AND ALL DESIGN PARAMETERS TO MEET THE PROPER APPLICATION OF THE PROPOSED EQUIPMENT. THE CONTRACTOR SHALL BASE HIS BID ACCORDINGLY.
7. PRIOR TO THE COMMENCEMENT OF WORK, THE CONTRACTOR SHALL COORDINATE FINAL LOCATIONS OF ALL FIRE ALARM EQUIPMENT WITH ALL ARCHITECTURAL, MECHANICAL, PLUMBING AND ELECTRICAL DRAWINGS.
8. ALL FIRE ALARM NOTIFICATION DEVICES SHALL BE WALL MOUNTED WHERE POSSIBLE. ALL DEVICE ROUGH-IN BOXES SHALL BE FLUSH-MOUNTED IN ALL FINISHED SPACES UNLESS OTHERWISE REQUIRED BY THE EQUIPMENT MANUFACTURER.
9. THE CONTRACTOR SHALL PROVIDE BRAND NEW FIRE ALARM SYSTEM AS REQUIRED. THIS SHALL INCLUDE, HOWEVER NOT NECESSARILY BE LIMITED TO THE FOLLOWING:
   a. LOCATE THE NEW FIRE ALARM CONTROL PANEL (ON THE GROUND LEVEL LOBBY). CONFIRMATION OF COVERAGE AND ACCESSORY EQUIPMENT AS REQUIRED FOR A COMPLETE, OPERATIONAL AND COMPLIANT SYSTEM.
   b. FURNISH AND INSTALL ALL SYSTEM WIRING DEVICES AND MOUNTING ASSEMBLIES SUCH AS INITIATING MODULES, POWER SUPPLIES, DEVICE CABLE, RACEWAY, AND ROUGH-IN BOXES AS REQUIRED TO PLACE THE SYSTEM IN PROPER WORKING ORDER WITH THE NEW DEVICES SHOWN, PER MANUFACTURER'S INSTRUCTIONS. AT MINIMUM, PROVIDE ONE POWER SUPPLY UNIT WITH BATTERY BACKUP FOR EVERY 30 DEVICES ADDED TO THE NEW FIRE ALARM CONTROL PANEL, OR AS OTHERWISE RECOMMENDED BY THE FIRE ALARM MAINTENANCE CONTRACTOR. ALL POWER SUPPLY UNITS SHALL BE INSTALLED IN EXISTING ELECTRICAL EQUIPMENT SPACES. ALL NOTIFICATION APPLIANCE CIRCUITS SHALL BE SYNCHRONIZED TO COMPLY WITH NYC 2014 ELECTRICAL CODE. ALL CABLE/CABLE ASSEMBLY PROVISIONS SHALL BE LISTED FOR PLENUM USE.
   c. PROVIDE ALL DEVICE AND POWER TERMINATION WORK.
   d. PROVIDE ALL POWER WIRING, FACILITIES AND APPURTENANCES PER THE NYC 2014 ELECTRICAL CODE.
   e. NEW FIRE ALARM SYSTEM REPRESENTATIVE SHALL BE RETAINED FOR STARTUP AND VALIDATION THE ENTIRE NEW SYSTEM. REFER TO FIRE ALARM DWG. FA-001.00 FOR FIRE ALARM CONTACT INFORMATION.
   f. PROVIDE ALL TESTING AND COMMISSIONING REQUIRED FOR RECEIVING FINAL APPROVAL(S) BY THE LOCAL AUTHORITY OF JURISDICTION.
   g. PROVIDE A FIRE ALARM SYSTEM SUBMITTAL FOR THE PURPOSE OF RECEIVING A CONSTRUCTION PERMIT, AND FOR THE PURPOSE OF COORDINATION WITH THE LOCAL AUTHORITY OF JURISDICTION. THIS SHALL INCLUDE, HOWEVER NOT NECESSARILY BE LIMITED TO THE FOLLOWING: A COMPLETE AND DETAILED BILL OF MATERIALS, A COORDINATED EQUIPMENT LOCATION PLAN, STORAGE BATTERY CALCULATIONS, VOLTAGE DROP CALCULATIONS, AND A COORDINATED DEVICE INTERCONNECTION DIAGRAM.

BUILDING DEPARTMENT NOTE: "THIS PLAN IS APPROVED ONLY FOR WORK INDICATED ON THE APPLICATION SPECIFICATION SHEET. ALL OTHER MATTERS SHOWN ARE NOT TO BE RELIED UPON, OR TO BE CONSIDERED AS EITHER BEING APPROVED OR IN ACCORDANCE WITH APPLICABLE CODES".

ALTERATION OR RE-USE OF THIS DRAWING FOR OTHER THAN THIS PROJECT WITHOUT WRITTEN CONSENT OF THE ABOVE ENGINEER IS PROHIBITED BY LAW.

Client:

RANGER PROPERTIES
4790 BROADWAY
NEW YORK, NY 10034

Architect:

FOGARTY FINGER
architecture | interiors

69 Walker St, New York, NY 10013
t 212 966 7450 f 212 966 7444

Library Architect:

Andrew Berman Architect, PLLC
77 Chambers Street, 4th Floor
New York, NY 10007
Tel 212.226.5998

Structural:

Thornton Tomasetti
51 Madison Avenue
New York, NY 10010
Tel 917.661.7800

MEP / FP:

Concessi Engineering, PC
499 7th Avenue, 11th Floor South Tower
New York, NY 10018
Tel 212.629.6810

FACADE:

SIMPSON GUMPERTZ & HEGER
550 7th Avenue, 10th Floor
New York, NY 10018
Tel 212.271.7000

CODE:

METROPOLIS
22 Courtland Street, 10th Floor
New York, NY 10007
Tel 212.233.6344

No.	Date	Issue
1	02/06/19	ISSUED FOR FILING / DD ESTIMATING

Project:

4790 BROADWAY
NEW YORK, NY 10034

Drawing Title:

FIRE ALARM 4TH THRU 10TH FLOOR PLAN

Seal & Signature:

STATE OF NEW YORK · ROBERT V. GONSALVES · No. 86705 · LICENSED PROFESSIONAL ENGINEER

DATE (MM-DD-YY):	11-02-2018
PROJECT No.:	7815.00
DRAWING BY:	TB
CHK BY:	RC
DWG. No.:	FA-304.00
CADD FILE No.:	–

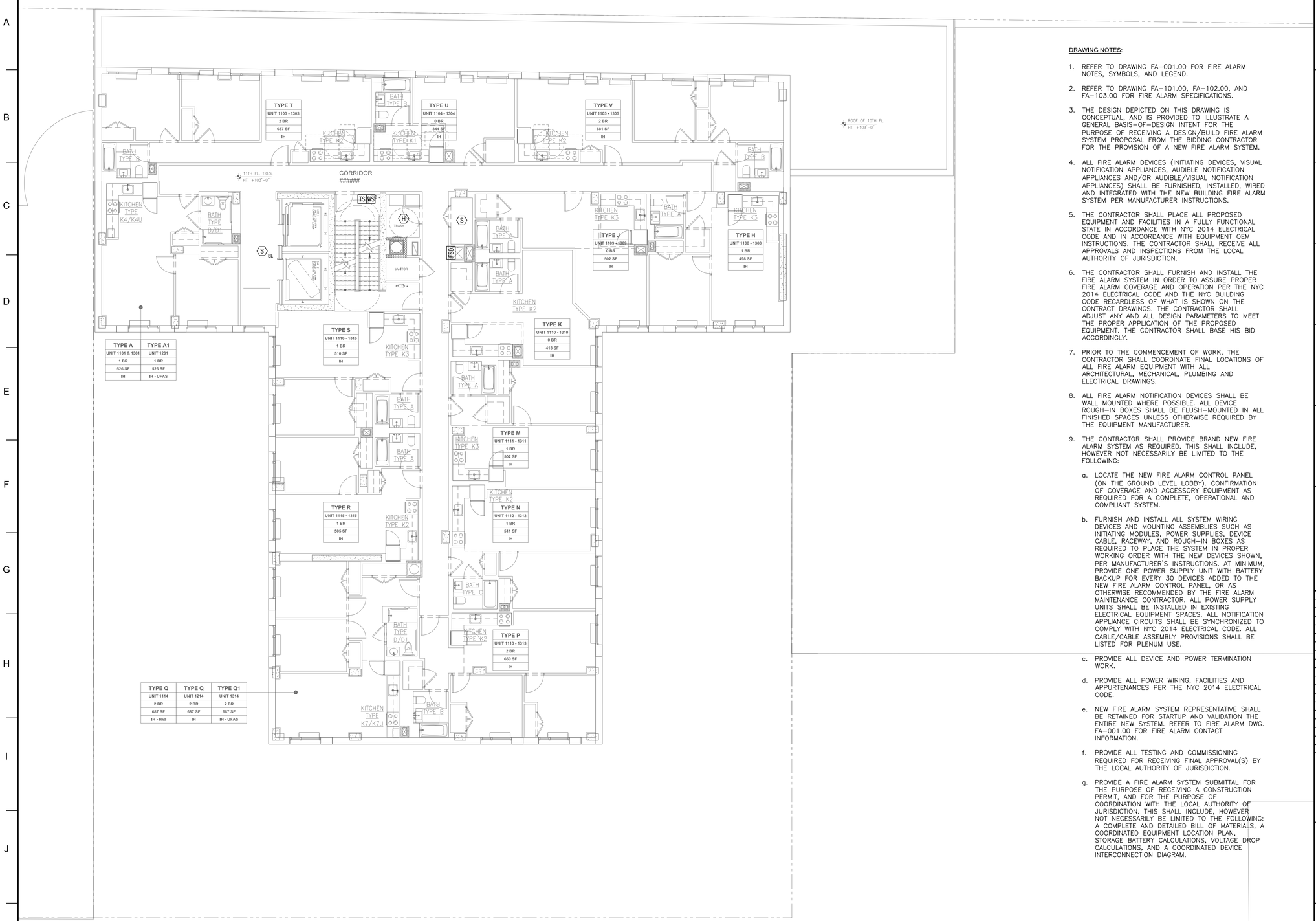

1 11TH - 13TH FLOOR PLAN

SCALE: 1/8"=1'-0"

DRAWING NOTES:

1. REFER TO DRAWING FA-001.00 FOR FIRE ALARM NOTES, SYMBOLS, AND LEGEND.
2. REFER TO DRAWING FA-101.00, FA-102.00, AND FA-103.00 FOR FIRE ALARM SPECIFICATIONS.
3. THE DESIGN DEPICTED ON THIS DRAWING IS CONCEPTUAL, AND IS PROVIDED TO ILLUSTRATE A GENERAL BASIS-OF-DESIGN INTENT FOR THE PURPOSE OF RECEIVING A DESIGN/BUILD FIRE ALARM SYSTEM PROPOSAL FROM THE BIDDING CONTRACTOR FOR THE PROVISION OF A NEW FIRE ALARM SYSTEM.
4. ALL FIRE ALARM DEVICES (INITIATING DEVICES, VISUAL NOTIFICATION APPLIANCES, AUDIBLE NOTIFICATION APPLIANCES AND/OR AUDIBLE/VISUAL NOTIFICATION APPLIANCES) SHALL BE FURNISHED, INSTALLED, WIRED AND INTEGRATED WITH THE NEW BUILDING FIRE ALARM SYSTEM PER MANUFACTURER INSTRUCTIONS.
5. THE CONTRACTOR SHALL PLACE ALL PROPOSED EQUIPMENT AND FACILITIES IN A FULLY FUNCTIONAL STATE IN ACCORDANCE WITH NYC 2014 ELECTRICAL CODE AND IN ACCORDANCE WITH EQUIPMENT OEM INSTRUCTIONS. THE CONTRACTOR SHALL RECEIVE ALL APPROVALS AND INSPECTIONS FROM THE LOCAL AUTHORITY OF JURISDICTION.
6. THE CONTRACTOR SHALL FURNISH AND INSTALL THE FIRE ALARM SYSTEM IN ORDER TO ASSURE PROPER FIRE ALARM COVERAGE AND OPERATION PER THE NYC 2014 ELECTRICAL CODE AND THE NYC BUILDING CODE REGARDLESS OF WHAT IS SHOWN ON THE CONTRACT DRAWINGS. THE CONTRACTOR SHALL ADJUST ANY AND ALL DESIGN PARAMETERS TO MEET THE PROPER APPLICATION OF THE PROPOSED EQUIPMENT. THE CONTRACTOR SHALL BASE HIS BID ACCORDINGLY.
7. PRIOR TO THE COMMENCEMENT OF WORK, THE CONTRACTOR SHALL COORDINATE FINAL LOCATIONS OF ALL FIRE ALARM EQUIPMENT WITH ALL ARCHITECTURAL, MECHANICAL, PLUMBING AND ELECTRICAL DRAWINGS.
8. ALL FIRE ALARM NOTIFICATION DEVICES SHALL BE WALL MOUNTED WHERE POSSIBLE. ALL DEVICE ROUGH-IN BOXES SHALL BE FLUSH-MOUNTED IN ALL FINISHED SPACES UNLESS OTHERWISE REQUIRED BY THE EQUIPMENT MANUFACTURER.
9. THE CONTRACTOR SHALL PROVIDE BRAND NEW FIRE ALARM SYSTEM AS REQUIRED. THIS SHALL INCLUDE, HOWEVER NOT NECESSARILY BE LIMITED TO THE FOLLOWING:
   a. LOCATE THE NEW FIRE ALARM CONTROL PANEL (ON THE GROUND LEVEL LOBBY). CONFIRMATION OF COVERAGE AND ACCESSORY EQUIPMENT AS REQUIRED FOR A COMPLETE, OPERATIONAL AND COMPLIANT SYSTEM.
   b. FURNISH AND INSTALL ALL SYSTEM WIRING DEVICES AND MOUNTING ASSEMBLIES SUCH AS INITIATING MODULES, POWER SUPPLIES, DEVICE CABLE, RACEWAY, AND ROUGH-IN BOXES AS REQUIRED TO PLACE THE SYSTEM IN PROPER WORKING ORDER WITH THE NEW DEVICES SHOWN, PER MANUFACTURER'S INSTRUCTIONS. AT MINIMUM, PROVIDE ONE POWER SUPPLY UNIT WITH BATTERY BACKUP FOR EVERY 30 DEVICES ADDED TO THE NEW FIRE ALARM CONTROL PANEL, OR AS OTHERWISE RECOMMENDED BY THE FIRE ALARM MAINTENANCE CONTRACTOR. ALL POWER SUPPLY UNITS SHALL BE INSTALLED IN EXISTING ELECTRICAL EQUIPMENT SPACES. ALL NOTIFICATION APPLIANCE CIRCUITS SHALL BE SYNCHRONIZED TO COMPLY WITH NYC 2014 ELECTRICAL CODE. ALL CABLE/CABLE ASSEMBLY PROVISIONS SHALL BE LISTED FOR PLENUM USE.
   c. PROVIDE ALL DEVICE AND POWER TERMINATION WORK.
   d. PROVIDE ALL POWER WIRING, FACILITIES AND APPURTENANCES PER THE NYC 2014 ELECTRICAL CODE.
   e. NEW FIRE ALARM SYSTEM REPRESENTATIVE SHALL BE RETAINED FOR STARTUP AND VALIDATION THE ENTIRE NEW SYSTEM. REFER TO FIRE ALARM DWG. FA-001.00 FOR FIRE ALARM CONTACT INFORMATION.
   f. PROVIDE ALL TESTING AND COMMISSIONING REQUIRED FOR RECEIVING FINAL APPROVAL(S) BY THE LOCAL AUTHORITY OF JURISDICTION.
   g. PROVIDE A FIRE ALARM SYSTEM SUBMITTAL FOR THE PURPOSE OF RECEIVING A CONSTRUCTION PERMIT, AND FOR THE PURPOSE OF COORDINATION WITH THE LOCAL AUTHORITY OF JURISDICTION. THIS SHALL INCLUDE, HOWEVER NOT NECESSARILY BE LIMITED TO THE FOLLOWING: A COMPLETE AND DETAILED BILL OF MATERIALS, A COORDINATED EQUIPMENT LOCATION PLAN, STORAGE BATTERY CALCULATIONS, VOLTAGE DROP CALCULATIONS, AND A COORDINATED DEVICE INTERCONNECTION DIAGRAM.

BUILDING DEPARTMENT NOTE: "THIS PLAN IS APPROVED ONLY FOR WORK INDICATED ON THE APPLICATION SPECIFICATION SHEET. ALL OTHER MATTERS SHOWN ARE NOT TO BE RELIED UPON, OR TO BE CONSIDERED AS EITHER BEING APPROVED OR IN ACCORDANCE WITH APPLICABLE CODES".

ALTERATION OR RE-USE OF THIS DRAWING FOR OTHER THAN THIS PROJECT WITHOUT WRITTEN CONSENT OF THE ABOVE ENGINEER IS PROHIBITED BY LAW.

Client:

RANGER PROPERTIES
4790 BROADWAY
NEW YORK, NY 10034

Architect:

FOGARTY FINGER
architecture | interiors

69 Walker St, New York, NY 10013
t 212 966 7450 f 212 966 7444

Library Architect:

Andrew Berman Architect, PLLC
77 Chambers Street, 4th Floor
New York, NY 10007
Tel 212.226.5998

Structural:

Thornton Tomasetti
51 Madison Avenue
New York, NY 10010
Tel 917.661.7800

MEP / FP:

Concessi Engineering, PC
499 7th Avenue, 11th Floor South Tower
New York, NY 10018
Tel 212.629.6810

FACADE:

SIMPSON GUMPERTZ & HEGER
550 7th Avenue, 10th Floor
New York, NY 10018
Tel 212.271.7000

CODE:

METROPOLIS
22 Courtland Street, 10th Floor
New York, NY 10007
Tel 212.233.6344

No.	Date	Issue
1	02/06/19	ISSUED FOR FILING / DD ESTIMATING

Project:

4790 BROADWAY
NEW YORK, NY 10034

Drawing Title:

FIRE ALARM 11TH THRU 13TH FLOOR PLAN

Seal & Signature:

STATE OF NEW YORK · ROBERT J. CONLON · LICENSED PROFESSIONAL ENGINEER · No. 86705

DATE (MM-DD-YY): 11-02-2018
PROJECT No.: 7815.00
DRAWING BY: TB
CHK BY: RC
DWG. No.: FA-305.00
CADD FILE No.: –

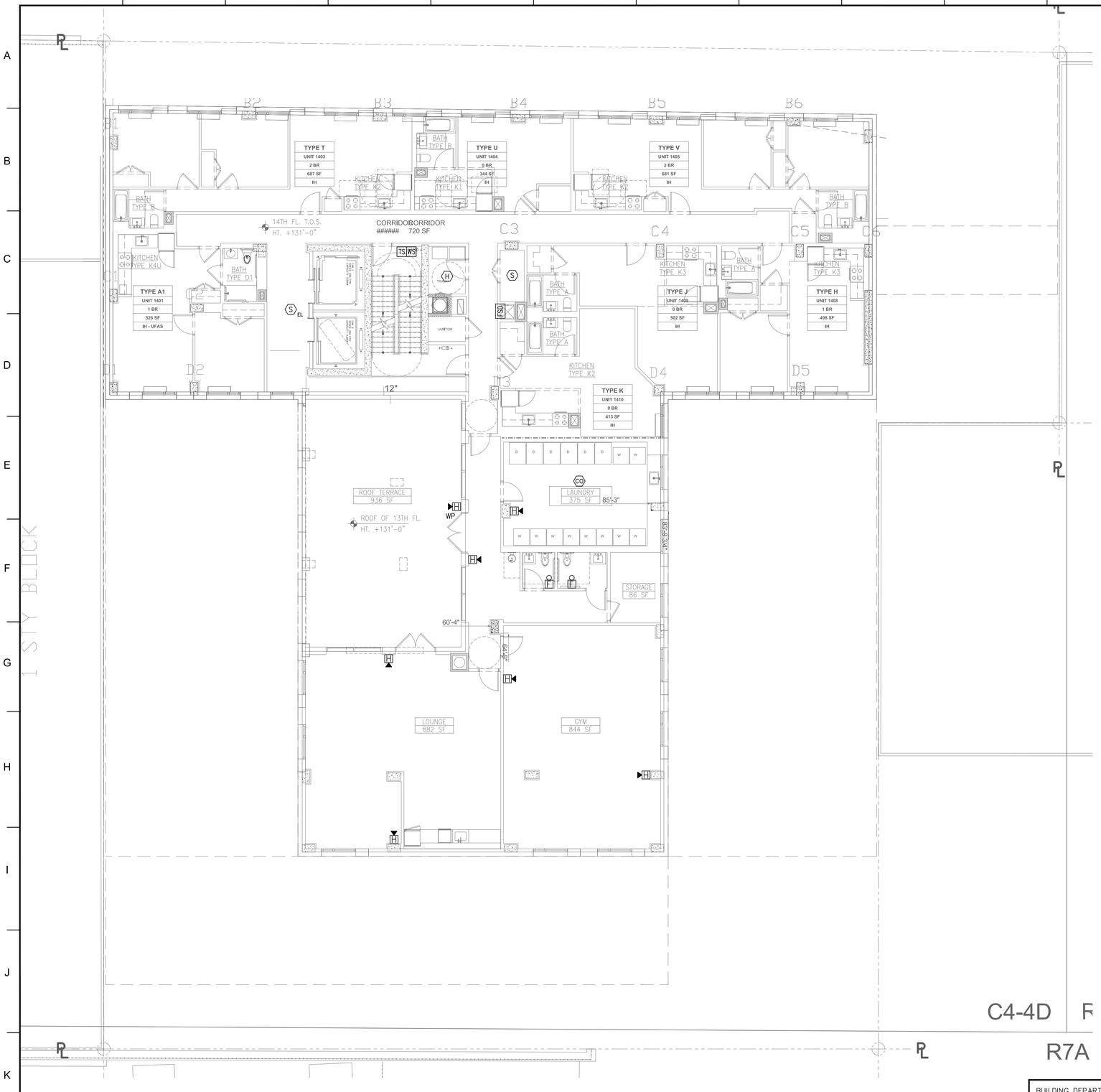

DRAWING NOTES:

1. REFER TO DRAWING FA-001.00 FOR FIRE ALARM NOTES, SYMBOLS, AND LEGEND.
2. REFER TO DRAWING FA-101.00, FA-102.00, AND FA-103.00 FOR FIRE ALARM SPECIFICATIONS.
3. THE DESIGN DEPICTED ON THIS DRAWING IS CONCEPTUAL, AND IS PROVIDED TO ILLUSTRATE A GENERAL BASIS-OF-DESIGN INTENT FOR THE PURPOSE OF RECEIVING A DESIGN/BUILD FIRE ALARM SYSTEM PROPOSAL FROM THE BIDDING CONTRACTOR FOR THE PROVISION OF A NEW FIRE ALARM SYSTEM.
4. ALL FIRE ALARM DEVICES (INITIATING DEVICES, VISUAL NOTIFICATION APPLIANCES, AUDIBLE NOTIFICATION APPLIANCES AND/OR AUDIBLE/VISUAL NOTIFICATION APPLIANCES) SHALL BE FURNISHED, INSTALLED, WIRED AND INTEGRATED WITH THE NEW BUILDING FIRE ALARM SYSTEM PER MANUFACTURER INSTRUCTIONS.
5. THE CONTRACTOR SHALL PLACE ALL PROPOSED EQUIPMENT AND FACILITIES IN A FULLY FUNCTIONAL STATE IN ACCORDANCE WITH NYC 2014 ELECTRICAL CODE AND IN ACCORDANCE WITH EQUIPMENT OEM INSTRUCTIONS. THE CONTRACTOR SHALL RECEIVE ALL APPROVALS AND INSPECTIONS FROM THE LOCAL AUTHORITY OF JURISDICTION.
6. THE CONTRACTOR SHALL FURNISH AND INSTALL THE FIRE ALARM SYSTEM IN ORDER TO ASSURE PROPER FIRE ALARM COVERAGE AND OPERATION PER THE NYC 2014 ELECTRICAL CODE AND THE NYC BUILDING CODE REGARDLESS OF WHAT IS SHOWN ON THE CONTRACT DRAWINGS. THE CONTRACTOR SHALL ADJUST ANY AND ALL DESIGN PARAMETERS TO MEET THE PROPER APPLICATION OF THE PROPOSED EQUIPMENT. THE CONTRACTOR SHALL BASE HIS BID ACCORDINGLY.
7. PRIOR TO THE COMMENCEMENT OF WORK, THE CONTRACTOR SHALL COORDINATE FINAL LOCATIONS OF ALL FIRE ALARM EQUIPMENT WITH ALL ARCHITECTURAL, MECHANICAL, PLUMBING AND ELECTRICAL DRAWINGS.
8. ALL FIRE ALARM NOTIFICATION DEVICES SHALL BE WALL MOUNTED WHERE POSSIBLE. ALL DEVICE ROUGH-IN BOXES SHALL BE FLUSH-MOUNTED IN ALL FINISHED SPACES UNLESS OTHERWISE REQUIRED BY THE EQUIPMENT MANUFACTURER.
9. THE CONTRACTOR SHALL PROVIDE BRAND NEW FIRE ALARM SYSTEM AS REQUIRED. THIS SHALL INCLUDE, HOWEVER NOT NECESSARILY BE LIMITED TO THE FOLLOWING:
   a. LOCATE THE NEW FIRE ALARM CONTROL PANEL (ON THE GROUND LEVEL LOBBY). CONFIRMATION OF COVERAGE AND ACCESSORY EQUIPMENT AS REQUIRED FOR A COMPLETE, OPERATIONAL AND COMPLIANT SYSTEM.
   b. FURNISH AND INSTALL ALL SYSTEM WIRING DEVICES AND MOUNTING ASSEMBLIES SUCH AS INITIATING MODULES, POWER SUPPLIES, DEVICE CABLE, RACEWAY, AND ROUGH-IN BOXES AS REQUIRED TO PLACE THE SYSTEM IN PROPER WORKING ORDER WITH THE NEW DEVICES SHOWN, PER MANUFACTURER'S INSTRUCTIONS. AT MINIMUM, PROVIDE ONE POWER SUPPLY UNIT WITH BATTERY BACKUP FOR EVERY 30 DEVICES ADDED TO THE NEW FIRE ALARM CONTROL PANEL, OR AS OTHERWISE RECOMMENDED BY THE FIRE ALARM MAINTENANCE CONTRACTOR. ALL POWER SUPPLY UNITS SHALL BE INSTALLED IN EXISTING ELECTRICAL EQUIPMENT SPACES. ALL NOTIFICATION APPLIANCE CIRCUITS SHALL BE SYNCHRONIZED TO COMPLY WITH NYC 2014 ELECTRICAL CODE. ALL CABLE/CABLE ASSEMBLY PROVISIONS SHALL BE LISTED FOR PLENUM USE.
   c. PROVIDE ALL DEVICE AND POWER TERMINATION WORK.
   d. PROVIDE ALL POWER WIRING, FACILITIES AND APPURTENANCES PER THE NYC 2014 ELECTRICAL CODE.
   e. NEW FIRE ALARM SYSTEM REPRESENTATIVE SHALL BE RETAINED FOR STARTUP AND VALIDATION THE ENTIRE NEW SYSTEM. REFER TO FIRE ALARM DWG. FA-001.00 FOR FIRE ALARM CONTACT INFORMATION.
   f. PROVIDE ALL TESTING AND COMMISSIONING REQUIRED FOR RECEIVING FINAL APPROVAL(S) BY THE LOCAL AUTHORITY OF JURISDICTION.
   g. PROVIDE A FIRE ALARM SYSTEM SUBMITTAL FOR THE PURPOSE OF RECEIVING A CONSTRUCTION PERMIT, AND FOR THE PURPOSE OF COORDINATION WITH THE LOCAL AUTHORITY OF JURISDICTION. THIS SHALL INCLUDE, HOWEVER NOT NECESSARILY BE LIMITED TO THE FOLLOWING: A COMPLETE AND DETAILED BILL OF MATERIALS, A COORDINATED EQUIPMENT LOCATION PLAN, STORAGE BATTERY CALCULATIONS, VOLTAGE DROP CALCULATIONS, AND A COORDINATED DEVICE INTERCONNECTION DIAGRAM.

1 14TH FLOOR PLAN
SCALE: 1/8"=1'-0"

BUILDING DEPARTMENT NOTE: "THIS PLAN IS APPROVED ONLY FOR WORK INDICATED ON THE APPLICATION SPECIFICATION SHEET. ALL OTHER MATTERS SHOWN ARE NOT TO BE RELIED UPON, OR TO BE CONSIDERED AS EITHER BEING APPROVED OR IN ACCORDANCE WITH APPLICABLE CODES".

ALTERATION OR RE-USE OF THIS DRAWING FOR OTHER THAN THIS PROJECT WITHOUT WRITTEN CONSENT OF THE ABOVE ENGINEER IS PROHIBITED BY LAW.

Client:
RANGER PROPERTIES
4790 BROADWAY
NEW YORK, NY 10034

Architect:
FOGARTY FINGER architecture | interiors
69 Walker St, New York, NY 10013
t 212 966 7450 f 212 966 7444

Library Architect:
Andrew Berman Architect, PLLC
77 Chambers Street, 4th Floor
New York, NY 10007
Tel 212.226.5998

Structural:
Thornton Tomasetti
51 Madison Avenue
New York, NY 10010
Tel 917.661.7800

MEP / FP:
Concessi Engineering, PC
499 7th Avenue, 11th Floor South Tower
New York, NY 10018
Tel 212.629.6810

FACADE:
SIMPSON GUMPERTZ & HEGER
550 7th Avenue, 10th Floor
New York, NY 10018
Tel 212.271.7000

CODE:
METROPOLIS
22 Courtland Street, 10th Floor
New York, NY 10007
Tel 212.233.6344

No.	Date	Issue
1	02/06/19	ISSUED FOR FILING / DD ESTIMATING

Project:
4790 BROADWAY
NEW YORK, NY 10034

Drawing Title:
FIRE ALARM
14TH FLOOR PLAN

Seal & Signature:
STATE OF NEW YORK · ROBERT J. CONGER · LICENSED PROFESSIONAL ENGINEER · No. 86705

DATE (MM-DD-YY):	11-02-2018
PROJECT No.:	7815.00
DRAWING BY:	TB
CHK BY:	RC
DWG. No.:	FA-306.00
CADD FILE No.:	–

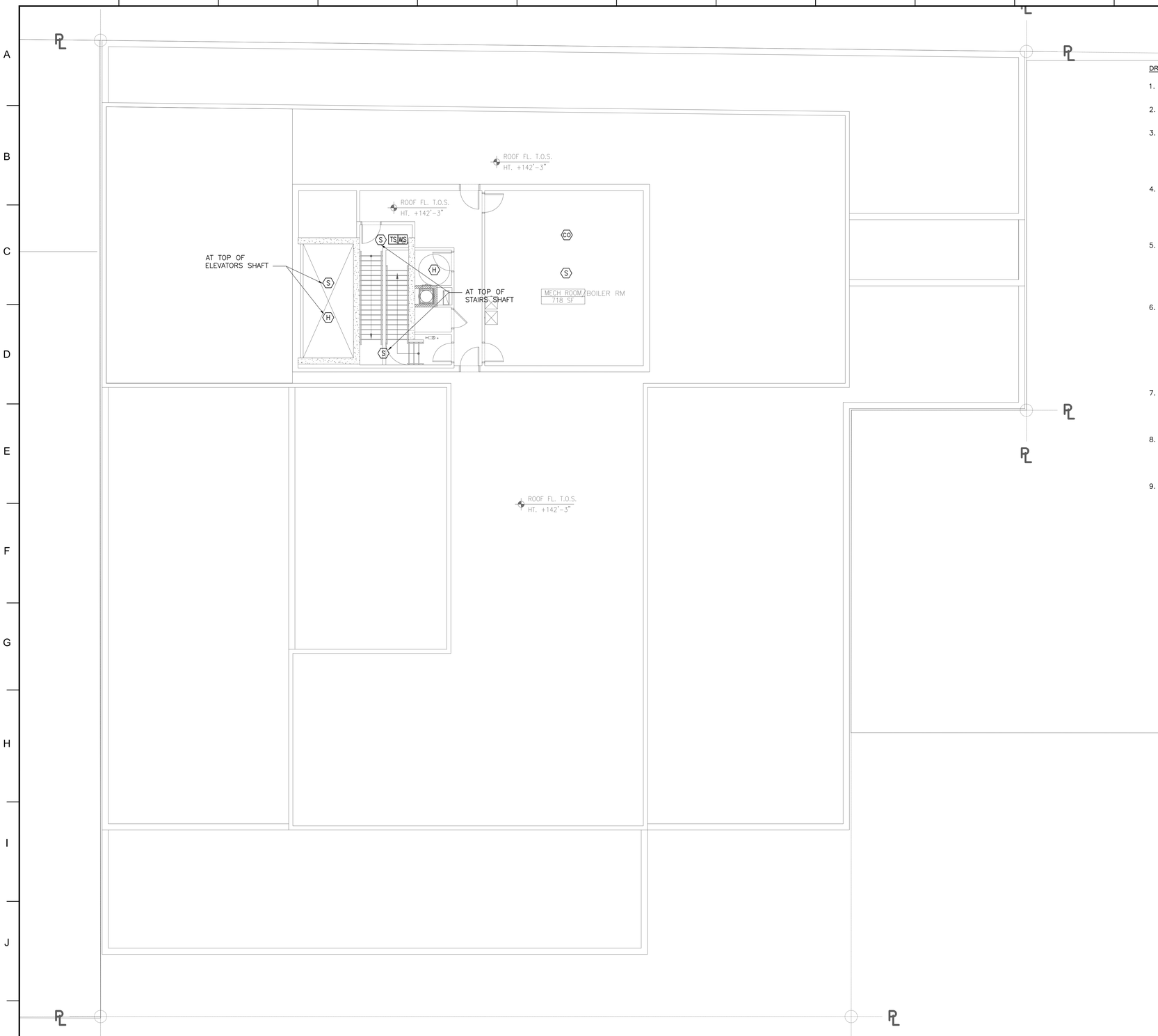

1 BULKHEAD PLAN
SCALE: 1/8"=1'-0"

DRAWING NOTES:

1. REFER TO DRAWING FA-001.00 FOR FIRE ALARM NOTES, SYMBOLS, AND LEGEND.
2. REFER TO DRAWING FA-101.00, FA-102.00, AND FA-103.00 FOR FIRE ALARM SPECIFICATIONS.
3. THE DESIGN DEPICTED ON THIS DRAWING IS CONCEPTUAL, AND IS PROVIDED TO ILLUSTRATE A GENERAL BASIS-OF-DESIGN INTENT FOR THE PURPOSE OF RECEIVING A DESIGN/BUILD FIRE ALARM SYSTEM PROPOSAL FROM THE BIDDING CONTRACTOR FOR THE PROVISION OF A NEW FIRE ALARM SYSTEM.
4. ALL FIRE ALARM DEVICES (INITIATING DEVICES, VISUAL NOTIFICATION APPLIANCES, AUDIBLE NOTIFICATION APPLIANCES AND/OR AUDIBLE/VISUAL NOTIFICATION APPLIANCES) SHALL BE FURNISHED, INSTALLED, WIRED AND INTEGRATED WITH THE NEW BUILDING FIRE ALARM SYSTEM PER MANUFACTURER INSTRUCTIONS.
5. THE CONTRACTOR SHALL PLACE ALL PROPOSED EQUIPMENT AND FACILITIES IN A FULLY FUNCTIONAL STATE IN ACCORDANCE WITH NYC 2014 ELECTRICAL CODE AND IN ACCORDANCE WITH EQUIPMENT OEM INSTRUCTIONS. THE CONTRACTOR SHALL RECEIVE ALL APPROVALS AND INSPECTIONS FROM THE LOCAL AUTHORITY OF JURISDICTION.
6. THE CONTRACTOR SHALL FURNISH AND INSTALL THE FIRE ALARM SYSTEM IN ORDER TO ASSURE PROPER FIRE ALARM COVERAGE AND OPERATION PER THE NYC 2014 ELECTRICAL CODE AND THE NYC BUILDING CODE REGARDLESS OF WHAT IS SHOWN ON THE CONTRACT DRAWINGS. THE CONTRACTOR SHALL ADJUST ANY AND ALL DESIGN PARAMETERS TO MEET THE PROPER APPLICATION OF THE PROPOSED EQUIPMENT. THE CONTRACTOR SHALL BASE HIS BID ACCORDINGLY.
7. PRIOR TO THE COMMENCEMENT OF WORK, THE CONTRACTOR SHALL COORDINATE FINAL LOCATIONS OF ALL FIRE ALARM EQUIPMENT WITH ALL ARCHITECTURAL, MECHANICAL, PLUMBING AND ELECTRICAL DRAWINGS.
8. ALL FIRE ALARM NOTIFICATION DEVICES SHALL BE WALL MOUNTED WHERE POSSIBLE. ALL DEVICE ROUGH-IN BOXES SHALL BE FLUSH-MOUNTED IN ALL FINISHED SPACES UNLESS OTHERWISE REQUIRED BY THE EQUIPMENT MANUFACTURER.
9. THE CONTRACTOR SHALL PROVIDE BRAND NEW FIRE ALARM SYSTEM AS REQUIRED. THIS SHALL INCLUDE, HOWEVER NOT NECESSARILY BE LIMITED TO THE FOLLOWING:
   a. LOCATE THE NEW FIRE ALARM CONTROL PANEL (ON THE GROUND LEVEL LOBBY). CONFIRMATION OF COVERAGE AND ACCESSORY EQUIPMENT AS REQUIRED FOR A COMPLETE, OPERATIONAL AND COMPLIANT SYSTEM.
   b. FURNISH AND INSTALL ALL SYSTEM WIRING DEVICES AND MOUNTING ASSEMBLIES SUCH AS INITIATING MODULES, POWER SUPPLIES, DEVICE CABLE, RACEWAY, AND ROUGH-IN BOXES AS REQUIRED TO PLACE THE SYSTEM IN PROPER WORKING ORDER WITH THE NEW DEVICES SHOWN, PER MANUFACTURER'S INSTRUCTIONS. AT MINIMUM, PROVIDE ONE POWER SUPPLY UNIT WITH BATTERY BACKUP FOR EVERY 30 DEVICES ADDED TO THE NEW FIRE ALARM CONTROL PANEL, OR AS OTHERWISE RECOMMENDED BY THE FIRE ALARM MAINTENANCE CONTRACTOR. ALL POWER SUPPLY UNITS SHALL BE INSTALLED IN EXISTING ELECTRICAL EQUIPMENT SPACES. ALL NOTIFICATION APPLIANCE CIRCUITS SHALL BE SYNCHRONIZED TO COMPLY WITH NYC 2014 ELECTRICAL CODE. ALL CABLE/CABLE ASSEMBLY PROVISIONS SHALL BE LISTED FOR PLENUM USE.
   c. PROVIDE ALL DEVICE AND POWER TERMINATION WORK.
   d. PROVIDE ALL POWER WIRING, FACILITIES AND APPURTENANCES PER THE NYC 2014 ELECTRICAL CODE.
   e. NEW FIRE ALARM SYSTEM REPRESENTATIVE SHALL BE RETAINED FOR STARTUP AND VALIDATION THE ENTIRE NEW SYSTEM. REFER TO FIRE ALARM DWG. FA-001.00 FOR FIRE ALARM CONTACT INFORMATION.
   f. PROVIDE ALL TESTING AND COMMISSIONING REQUIRED FOR RECEIVING FINAL APPROVAL(S) BY THE LOCAL AUTHORITY OF JURISDICTION.
   g. PROVIDE A FIRE ALARM SYSTEM SUBMITTAL FOR THE PURPOSE OF RECEIVING A CONSTRUCTION PERMIT, AND FOR THE PURPOSE OF COORDINATION WITH THE LOCAL AUTHORITY OF JURISDICTION. THIS SHALL INCLUDE, HOWEVER NOT NECESSARILY BE LIMITED TO THE FOLLOWING: A COMPLETE AND DETAILED BILL OF MATERIALS, A COORDINATED EQUIPMENT LOCATION PLAN, STORAGE BATTERY CALCULATIONS, VOLTAGE DROP CALCULATIONS, AND A COORDINATED DEVICE INTERCONNECTION DIAGRAM.

BUILDING DEPARTMENT NOTE: "THIS PLAN IS APPROVED ONLY FOR WORK INDICATED ON THE APPLICATION SPECIFICATION SHEET. ALL OTHER MATTERS SHOWN ARE NOT TO BE RELIED UPON, OR TO BE CONSIDERED AS EITHER BEING APPROVED OR IN ACCORDANCE WITH APPLICABLE CODES".

ALTERATION OR RE-USE OF THIS DRAWING FOR OTHER THAN THIS PROJECT WITHOUT WRITTEN CONSENT OF THE ABOVE ENGINEER IS PROHIBITED BY LAW.

Client:
RANGER PROPERTIES
4790 BROADWAY
NEW YORK, NY 10034

Architect:
FOGARTY FINGER architecture | interiors
69 Walker St, New York, NY 10013
t 212 966 7450 f 212 966 7444

Library Architect:
Andrew Berman Architect, PLLC
77 Chambers Street, 4th Floor
New York, NY 10007
Tel 212.226.5998

Structural:
Thornton Tomasetti
51 Madison Avenue
New York, NY 10010
Tel 917.661.7800

MEP / FP:
Concessi Engineering, PC
499 7th Avenue, 11th Floor South Tower
New York, NY 10018
Tel 212.629.6810

FACADE:
SIMPSON GUMPERTZ & HEGER
550 7th Avenue, 10th Floor
New York, NY 10018
Tel 212.271.7000

CODE:
METROPOLIS
22 Courtland Street, 10th Floor
New York, NY 10007
Tel 212.233.6344

No.	Date	Issue
1	02/06/19	ISSUED FOR FILING / DD ESTIMATING

Project:
4790 BROADWAY
NEW YORK, NY 10034

Drawing Title:
FIRE ALARM
BULKHEAD PLAN

Seal & Signature:
STATE OF NEW YORK · ROBERT L. CONCESSI · No. 86705 · LICENSED PROFESSIONAL ENGINEER

DATE (MM-DD-YY): 11-02-2018
PROJECT No.: 7815.00
DRAWING BY: TB
CHK BY: RC
DWG. No.: FA-307.00
CADD FILE No.: –
13 OF 15

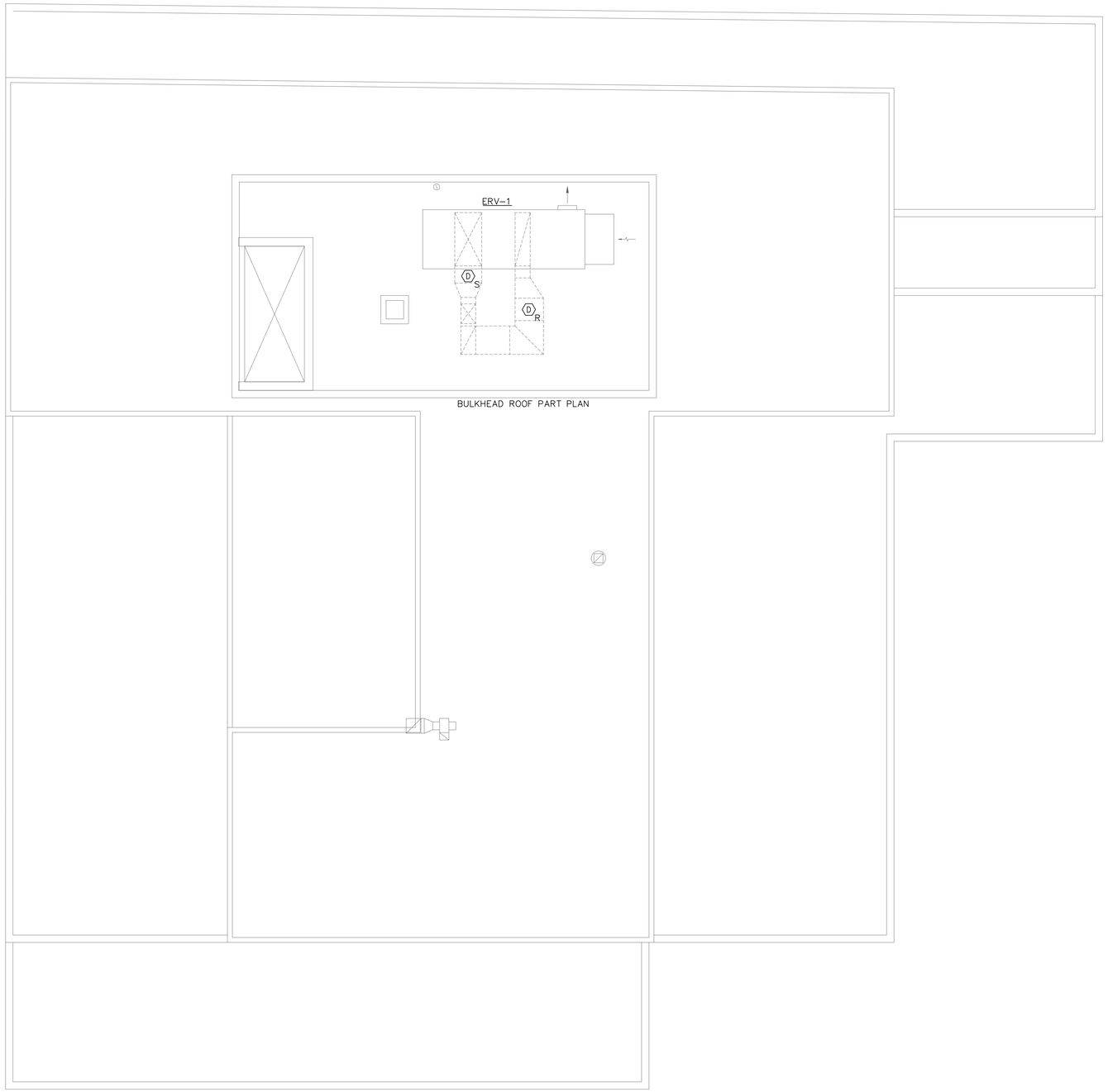

1 BULKHEAD ROOF PLAN
SCALE: 1/8"=1'-0"

BUILDING DEPARTMENT NOTE: "THIS PLAN IS APPROVED ONLY FOR WORK INDICATED ON THE APPLICATION SPECIFICATION SHEET. ALL OTHER MATTERS SHOWN ARE NOT TO BE RELIED UPON, OR TO BE CONSIDERED AS EITHER BEING APPROVED OR IN ACCORDANCE WITH APPLICABLE CODES".

ALTERATION OR RE-USE OF THIS DRAWING FOR OTHER THAN THIS PROJECT WITHOUT WRITTEN CONSENT OF THE ABOVE ENGINEER IS PROHIBITED BY LAW.

Client:

RANGER PROPERTIES
4790 BROADWAY
NEW YORK, NY 10034

Architect:

FOGARTY FINGER
architecture | interiors
69 Walker St, New York, NY 10013
t 212 966 7450 f 212 966 7444

Library Architect:

Andrew Berman Architect, PLLC
77 Chambers Street, 4th Floor
New York, NY 10007
Tel 212.226.5998

Structural:

Thornton Tomasetti
51 Madison Avenue
New York, NY 10010
Tel 917.661.7800

MEP / FP:

Concessi Engineering, PC
499 7th Avenue, 11th Floor South Tower
New York, NY 10018
Tel 212.629.6810

FACADE:

SIMPSON GUMPERTZ & HEGER
550 7th Avenue, 10th Floor
New York, NY 10018
Tel 212.271.7000

CODE:

METROPOLIS
22 Courtland Street, 10th Floor
New York, NY 10007
Tel 212.233.6344

No.	Date	Issue
1	02/06/19	ISSUED FOR FILING / DD ESTIMATING

Project:

4790 BROADWAY
NEW YORK, NY 10034

Drawing Title:

FIRE ALARM
BULKHEAD ROOF PLAN

Seal & Signature:

STATE OF NEW YORK
ROBERT L. CONCESSI
No. 86705
LICENSED PROFESSIONAL ENGINEER

DATE (MM-DD-YY):	11-02-2018
PROJECT No.:	7815.00
DRAWING BY:	TB
CHK BY:	RC
DWG. No.:	FA-308.00
CADD FILE No.:	14 OF 15

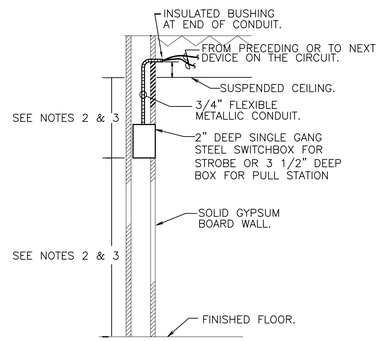

TYPICAL RECESSED MOUNTED STROBE, PULL STATION INSTALLATION DETAIL

NOT TO SCALE

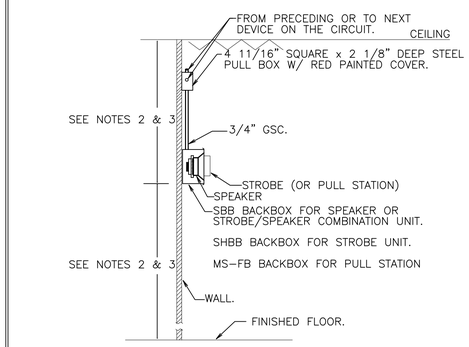

TYPICAL SURFACE MOUNTED (FOR OPEN TYPE AREA) PULL STATION, STROBE, SPEAKER OR COMBINATION INSTALLATION DETAIL

NOT TO SCALE

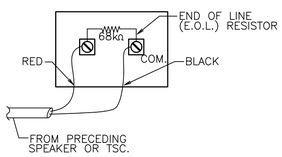

TYPICAL SPEAKER WIRING DIAGRAM FOR END OF LINE SPEAKERS

NOT TO SCALE

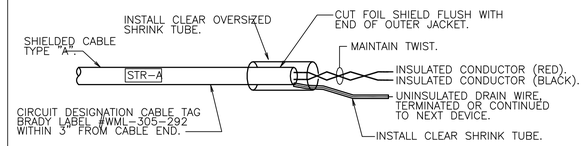

TYPICAL SHIELD/DRAIN INSULATING METHOD 'A' STROBE CIRCUITS

NOT TO SCALE

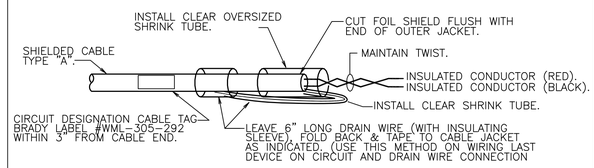

TYPICAL SHIELD/DRAIN INSULATING METHOD 'B' STROBE CIRCUITS

NOT TO SCALE

NOTES:

DO NOT USE REAR CONDUIT ENTRY

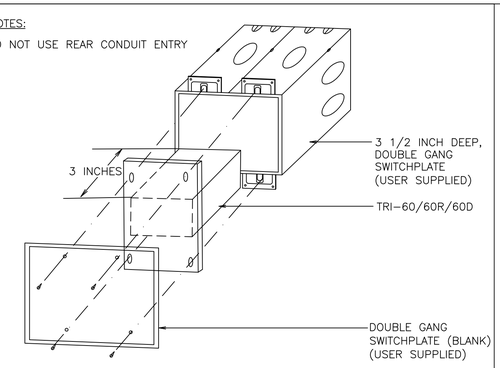

MOUNTING THE TRI-60D FIRE ALARM SYSTEM

NOT TO SCALE

MOUNTING:
ADDRESSABLE INTERFACE MODELS TRI-60, TRI-60D, AND TRI-60R MOUNT DIRECTLY INTO A 3 1/2 INCH DEEP, DOUBLE GANG SWITCHBOX (USER SUPPLIED) ONLY. FASTEN THE MODULE TO THE SWITCHBOX WITH A STADARD BLANK, DOUBLE GANG SWITCHPLATE (ALSO USER SUPPLIED).

BUILDING DEPARTMENT NOTE: "THIS PLAN IS APPROVED ONLY FOR WORK INDICATED ON THE APPLICATION SPECIFICATION SHEET. ALL OTHER MATTERS SHOWN ARE NOT TO BE RELIED UPON, OR TO BE CONSIDERED AS EITHER BEING APPROVED OR IN ACCORDANCE WITH APPLICABLE CODES".

ALTERATION OR RE-USE OF THIS DRAWING FOR OTHER THAN THIS PROJECT WITHOUT WRITTEN CONSENT OF THE ABOVE ENGINEER IS PROHIBITED BY LAW.

Client:

RANGER PROPERTIES
4790 BROADWAY
NEW YORK, NY 10034

Architect:

FOGARTY FINGER architecture | interiors

69 Walker St, New York, NY 10013
t 212 966 7450 f 212 966 7444

Library Architect:

Andrew Berman Architect, PLLC
77 Chambers Street, 4th Floor
New York, NY 10007
Tel 212.226.5998

Structural:

Thornton Tomasetti
51 Madison Avenue
New York, NY 10010
Tel 917.661.7800

MEP / FP:

Concessi Engineering, PC
499 7th Avenue, 11th Floor South Tower
New York, NY 10018
Tel 212.629.6810

FACADE:

SIMPSON GUMPERTZ & HEGER
550 7th Avenue, 10th Floor
New York, NY 10018
Tel 212.271.7000

CODE:

METROPOLIS
22 Courtland Street, 10th Floor
New York, NY 10007
Tel 212.233.6344

No.	Date	Issue
1	02/06/19	ISSUED FOR FILING / DD ESTIMATING

Project:

4790 BROADWAY
NEW YORK, NY 10034

Drawing Title:

FIRE ALARM DETAILS

Seal & Signature:

STATE OF NEW YORK · ROBERT J. CONOLLY · No. 86705 · LICENSED PROFESSIONAL ENGINEER

DATE (MM-DD-YY):	11-02-2018
PROJECT No.:	7815.00
DRAWING BY:	TB
CHK BY:	RC
DWG. No.:	FA-401.00
CADD FILE No.: –	15 OF 15

PLUMBING GENERAL NOTES (AS APPLICABLE)

1. GENERAL NOTES, SYMBOLS LIST AND DETAILS ARE APPLICABLE TO ALL DRAWINGS MARKED P.
2. DRAWINGS ARE DIAGRAMMATIC: DETERMINE LOCATIONS OF SYSTEMS AND COMPONENTS IN FIELD.
3. WORK OF THIS SECTION IS SPECIFIED ON DRAWINGS.
4. IT SHALL BE THE RESPONSIBILITY OF THIS CONTRACTOR TO COORDINATE THE WORK WITH THAT OF ALL OTHER TRADES, INCLUDING (BUT NOT LIMITED TO), ELECTRICAL, HVAC PROCESS PIPING, SPRINKLER, PLUMBING STRUCTURAL AND GENERAL ARCHITECTURE.
5. ANY INTERFERENCE SHALL BE BROUGHT TO THE ATTENTION OF THE CONSTRUCTION MANGER AND THE OWNER'S REPRESENTATIVE, AND SHALL BE RESOLVED PRIOR TO THE INSTALLATION OF THE WORK INVOLVED.
6. NO WORK SHALL BE INSTALLED IN VIOLATION OF ANY GOVERNING CODES. ANY WORK SHOWN ON THE DRAWINGS WHICH IS IN VIOLATION OF SUCH CODES SHALL BE BROUGHT TO THE ATTENTION OF THE CONSTRUCTION MANAGER AND THE OWNER'S REPRESENTATIVE AND SHALL BE RESOLVED PRIOR TO THE INSTALLATION OF THE WORK INVOLVED.
7. ALL PIPING PENETRATING CEILING AND WALLS SHALL BE INSTALLED WITH CHROME (STAINLESS WHERE NOTED) PLATED ESCUTCHEONS AT THE PENETRATION. ALL PIPING PENETRATING EXTERIOR WALLS AND ROOFS SHALL BE FLASHED IN AN APPROVED MANNER AND SHALL BE SEALED WEATHER TIGHT. PIPING PENETRATING RATED PARTITIONS SHALL BE PROTECTED AS REQUIRED BY LOCAL CODE AUTHORITY (SEE DETAILS).
8. MANUFACTURER'S MODEL NUMBERS ARE SPECIFIED SOLELY TO ESTABLISH STANDARDS OF QUALITY FOR PERFORMANCE AND MATERIALS.
9. PRODUCTION INSTALLATION SHALL ADHERE TO MANUFACTURERS' RECOMMENDATIONS.
10. PROVIDE ACCESS PANELS FOR EQUIPMENT THAT REQUIRES PERIODIC SERVICE.
11. ALL PIPING SHALL BE PROPERLY SUPPORTED BY THE BUILDING STRUCTURE AND SHALL NOT REST ON CEILING TILES OR CEILING STRUCTURE.
12. PROVIDE SHUTOFF VALVES ON ALL BRANCH PIPING AND ON ALL SUPPLIES TO INDIVIDUAL FIXTURES AND EQUIPMENT, PROVIDE BALL VALVES ON ALL WATER MAIN BRANCHES IN CORRIDORS AND WHERE INDICATED ON DRAWINGS. ALL VALVES SHALL BE ACCESSIBLE.
13. ALL SLEEVES THROUGH CONCRETE FLOORS AND ALL CORE DRILL OF CONCRETE FLOORS AND WALLS SHALL BE BY THIS CONTRACTOR.
14. SCHEDULE WORK OF THIS SECTION TO AVOID INTERFERENCE WITH FIRE-PROOFING WORK.
15. RUN PIPING CONCEALED, UNLESS SPECIFIED OTHERWISE, AND CLEAR OR CEILING INSERTS.
16. STRUCTURAL WELDING SHALL BE ¼-INCH FILLET UNLESS REQUIRED OTHERWISE.
17. PROVIDE CLAMPS, OFFSETS, EXPANSION JOINTS, ANCHORS AND GUIDES AS NECESSARY TO PREVENT STRESS ON PIPING.
18. VERIFY EXACT SIZES, LOCATIONS, INVERTS AND ELEVATIONS PRIOR TO RUNNING ANY PIPING. REFER TO ARCHITECTURAL DRAWINGS FOR EXACT LOCATIONS OF ALL FIXTURES AND EQUIPMENT.
19. PIPING SHALL NOT RUN OVER ELECTRICAL PANELS AND SHALL BE COORDINATED WITH WORK OF OTHER TRADES.
20. EACH BIDDER SHALL VISIT THE SITE AND BECOME INFORMED AS TO THE CONDITION OF THE PREMISES AND THE EXTENT AND CHARACTER OF WORK REQUIRED. NO ADDITIONAL COMPENSATION WILL BE APPROVED DUE TO THE FIELD CONDITIONS.
21. ALL EXISTING SYSTEM SHALL BE LEFT IN PERFECT WORKING ORDER UPON COMPLETION OF ALL NEW WORK.
22. EXACT SIZES AND LOCATIONS OF ALL EXISTING PIPING SHALL BE VERIFIED ON THE SITE.
23. THIS CONTRACTOR SHALL NOT INTERRUPT ANY OF THE SERVICES OF THE EXISTING BUILDING NOR INTERFERE WITH THE SERVICES IN ANY WAY WITHOUT THE EXPRESSED PERMISSION OF THE OWNER. SUCH INTERRUPTIONS AND INTERFERENCES SHALL BE MADE AS BRIEF AS POSSIBLE AND ONLY AT THE SUITED BY THE OWNER.
24. UNDER NO CIRCUMSTANCES WILL THIS CONTRACTOR OR HIS WORKMEN BE PERMITTED TO USE ANY PART OF THE BUILDING AS A SHOP, EXCEPT PART DESIGNATED BY THE OWNER FOR SUCH PURPOSES.
25. UNNECESSARY NOISE SHALL BE AVOIDED AT ALL TIMES AND NECESSARY NOISE SHALL BE REDUCED TO A MINIMUM.
26. WHERE THE WORK MAKES TEMPORARY SHUTDOWN OF SERVICES UNAVOIDABLE, THEY SHALL BE MADE AT NIGHT OR AT TIMES AS THIS WILL CAUSE THE LEASE INTERFERENCE WITH THE ESTABLISHED OPERATING ROUTINE OF THE BUILDING.
27. THIS CONTRACTOR SHALL ARRANGE THE WORK CONTINUOUSLY, INCLUDING APPROVED BY THE ARCHITECT OVERTIME IF REQUIRED, TO ASSURE THAT SERVICES WILL BE SHUT DOWN AND CUT-INS ONLY DURING THE TIME ACTUALLY REQUIRED TO MAKE THE NECESSARY CONNECTION TO EXISTING WORK.
28. THIS CONTRACTOR SHALL GIVE AMPLE WRITTEN NOTICE IN ADVANCE TO THE OWNER OF ANY REQUIRED SHUT DOWNS.
29. ANY AND ALL REQUIRED DEMOLITION WORK TO BE PERFORMED ABOVE EXISTING SUSPENDED CEILINGS AND FURRED OUT WALLS SHALL BE DONE AT THE TIME WHEN THE EXISTING CEILINGS AND FURRED OUT WALLS ARE REMOVED BY THE GENERAL CONTRACTOR.
30. TO ENSURE CONTINUOUS OPERATION, MAKE ALL NECESSARY TEMPORARY CONNECTIONS BETWEEN NEW AND EXISTING WORK. ALL COST RESULTING FROM TEMPORARY SHUTDOWNS SHALL BE BORNE BY THIS CONTRACTOR.
31. CONTRACTOR SHALL CHECK AND VERIFY THE EXACT LOCATION OF ALL PIPE PENETRATIONS AND PIPE ELEVATIONS.
32. ACCESS DOORS SHALL BE PROVIDED FOR ALL CLEAN OUT. VALVES, FLUSH VALVES, AND ANY OTHER EQUIPMENT AND ACCESSORIES THAT MAY REQUIRE ACCESS FOR MAINTENANCE OR OPERATION WHICH ARE LOCATED BEHIND WALLS AND PARTITIONS OR CONCEALED IN HUNG CEILINGS.
33. CONTRACTORS SHALL REFER TO AND COORDINATE WITH OTHER TRADES DRAWINGS FOR WORK OF CONCRETE PADS, HOUSE TRAP PIT AND GREASE TRAP PITS.
34. ALL PLUMBING WORK SHALL MEET THE REQUIREMENT OF PLUMBING CODE, AND OTHER AGENCIES AND AUTHORITIES HAVING JURISDICTION.
35. WHERE FIRE RATED PARTITIONS AND SOUND PARTITIONS ARE INDICATED ON THE ARCHITECTURAL PLANS, THE CONTRACTOR SHALL SEAL ALL PIPING THRU WALLS WITH FIRE RATED CAULKING AND SEAL AIR/NOISE TIGHT. PROVIDE SOUND PACKING SEALANT AND CAULKING AS REQUIRED TO INSURE WALL INTEGRITY.
36. HOT WATER PIPING TO USE HEAT TRACING OR A CIRCULATOR SYSTEM WITH PIPE INSULATION TO MAINTAIN TEMPERATURE IN PIPING TO FIXTURES.

BUILDING DEPARTMENT PLUMBING NOTES

THE PLUMBING SYSTEMS (SANITARY, WASTE, VENT, WATER DISTRIBUTION AND GAS) AND ALL ASSOCIATED EQUIPMENT WILL BE INSTALLED AND MAINTAINED IN ACCORDANCE WITH THE FULL REQUIREMENTS OF PLUMBING CODE AND AGENCIES HAVING JURISDICTION.

1. THE SANITARY SYSTEM SHALL BE PROVIDED IN FULL ACCORDANCE WITH THE GENERAL PROVISIONS OF SECTION PC301.
2. THE MATERIALS USED IN THE PLUMBING SYSTEMS WILL BE PROVIDED IN FULL ACCORDANCE WITH SECTION C403 OF NYCECC AND BUILDING CODE PC302 AND PC303.
3. EQUIPMENT HOOK-UP AND THE JOINING WILL BE FULL COMPLIANCE WITH SECTIONS PC605 AND PC705.
4. THE INSTALLATION OF FIXTURES WILL BE IN FULL ACCORDANCE WITH PLUMBING CODE AND AGENCIES HAVING JURISDICTION.
5. TRAPS FOR FIXTURES AND DRAIN LINES WILL BE PROVIDED AND CLEANOUTS INSTALLED IN FULL COMPLIANCE WITH SECTIONS PC412, PC708 AND PC CHAPTER 10.
6. VERTICAL AND HORIZONTAL PIPING WILL BE HUNG AND SUPPORTED AS DIRECTED IN SPECIFICATIONS AND WITH THE FULL COMPLIANCE WITH SECTION PC308.
7. THE WATER SUPPLY SYSTEMS OF THE SUBJECT BUILDING SHALL BE INSTALLED AND MAINTAINED IN FULL COMPLIANCE WITH PLUMBING CODE AND AGENCIES HAVING JURISDICTION.
8. THE SANITARY DRAINAGE SYSTEM WILL BE SIZED AND INSTALLED IN FULL COMPLIANCE WITH PC CHAPTER 7.
9. THE VENT PIPING FOR THE SANITARY DRAINAGE SYSTEM OF THE SUBJECT BUILDING WILL BE INSTALLED IN FULL COMPLIANCE WITH SECTION PC702 & PC CHAPTER 9.
10. THE STORM DRAINAGE SYSTEM AND PIPING WILL BE INSTALLED IN FULL COMPLIANCE WITH CHAPTER 11.
11. GAS PIPING AND EQUIPMENT WILL BE INSTALLED IN FULL COMPLIANCE WITH THE CODE AND AGENCIES HAVING JURISDICTION.
12. ALL TRENCHING SHALL BE DONE IN ACCORDANCE WITH THE REQUIREMENTS OF SECTION PC306.
13. RAT PROOFING SHALL BE IN ACCORDANCE WITH SECTION PC304.
14. TEMPORARY TOILET FACILITIES SHALL BE PROVIDED FOR WORKMAN AS PER SECTION PC311.

GENERAL PLUMBING NOTES

1. PRIOR TO BID, CONTRACTOR SHALL VISIT SITE TO OBSERVE AND VERIFY EXISTING CONDITIONS AFFECTING ROUTING OF NEW SANITARY DRAIN AND VENT LINES, AND WATER PIPING IN BUILDING SPACES. NO ADDITIONAL CHARGES WILL BE PERMITTED AFTER THE SUBMISSION OF BID.
2. PRIOR TO BID, SITE VISIT SHALL INCLUDE THE VERIFICATION OF LOCATIONS OF EXISTING SERVICES, INCLUDING BUT NOT LIMITED TO CONNECTION POINTS OF SANITARY DRAINAGE, VENT, HOT AND COLD WATER PIPING.
3. CONTRACTOR SHALL COORDINATE ALL WORK IN/AT THE CEILING WITH BUILDING AND TENANTS.
4. REMOVE ALL EXPOSED ROUGHING FROM EXISTING REMOVED PLUMBING FIXTURES AND CAP ACTIVE PIPING BELOW FINISHED SURFACES. DEAD ENDS SHALL NOT EXCEED 2'-0".

PLUMBING SYMBOL LIST

(THESE SYMBOLS ARE STANDARDS AND DO NOT NECESSARILY ALL APPEAR ON DRAWINGS)

	REMOVE EXISTING PIPING/FIXTURE
	EXISTING PIPING TO REMAIN (SERVICE AS NOTED)
	COLD WATER PIPING (CW)
	HOT WATER PIPING (HW)
	HOT WATER RETURN (HWR)
	UNDER GROUND SANITARY DRAINAGE PIPING
SAN	SANITARY DRAINAGE PIPING
SW	STORM WATER DRAINAGE
	VENT PIPING (V)
	CONTROL VALVE
	CHECK VALVE
	CONNECT NEW PIPING TO EXISTING

PLUMBING ABBREVIATIONS

(THESE ABBREVIATIONS ARE STANDARDS AND DO NOT NECESSARILY ALL APPEAR ON DRAWINGS)

A.C	AIR CHAMBER	HW	HOT WATER
A.D.A	AMERICAN DISABILITIES ACT	HWR	HOT WATER RETURN
B	BIDAY	IM	ICE MAKER
BR	BRANCH	LAV	LAVATORY
BFP	BACKFLOW PREVENTER	LDR	LEADER
CC	CAPPED CONNECTION	MS	MOP SINK
CLG	CEILING	NIC	NOT IN PLUMBING SECTION OF WORK
CM	COFFEE MAKER	PLBG	PLUMBING
CO	CLEANOUT	PO	PLUGGED OUTLET
CP	CHROME PLATE	PRV	PRESSURE REDUCING VALVE
CW	COLD WATER	RPZ	REDUCED PRESSURE ZONE BFP
DN	DOWN	S	SOIL
DW	DISH WASHER	SK	SINK
DWG	DRAWING	TYP.	TYPICAL
E	EXISTING	UR	URINAL
EWC	ELECTRICAL WATER COOLER	V	VENT
FD	FLOOR DRAIN	VM	VENDING MACHINE
FN.D.	FUNNEL DRAIN	VB	VACUUM BREAKER
FU	FIXTURE UNITS	VIV	VALVE IN VERTICAL
GALV.	GALVANIZED LINE	W	WASTE
G.C.	GENERAL CONTRACTOR	W/	WITH
H.C.	HUNG CEILING	WC	WATER CLOSET
HVAC	HEATING, VENTILATING AND AIR CONDITIONING	WHA	WATER HAMMER ARRESTOR
		WU	WATER UNIT
C.V.	CHECK VALVE		

PLUMBING DRAWING LIST

DWG NO.	TITLE
P-101.00	PLUMBING SYMBOLS, NOTES, ABBREVIATIONS AND SITE PLAN
P-102.00	PLUMBING ENERGY ANALYSIS AND SCHEDULE
P-201.00	PLUMBING DETAILS
P-301.00	PLUMBING CELLAR UNDERGROUND PIPING PLAN
P-302.00	PLUMBING CELLAR ABOVE GROUND PIPING PLAN
P-303.00	PLUMBING GROUND FLOOR PLAN
P-304.00	PLUMBING 2ND FLOOR PLAN
P-305.00	PLUMBING 3RD FLOOR PLAN
P-306.00	PLUMBING 4TH-10TH FLOOR PLAN
P-307.00	PLUMBING 11TH-13TH FLOOR PLAN
P-308.00	PLUMBING 14TH FLOOR PLAN
P-309.00	PLUMBING BULKHEAD PLAN
P-401.00	PLUMBING SANITARY RISER DIAGRAM SHEET #1 OF 3
P-402.00	PLUMBING SANITARY RISER DIAGRAM SHEET #2 OF 3
P-403.00	PLUMBING SANITARY RISER DIAGRAM SHEET #3 OF 3
P-404.00	PLUMBING STORM WATER RISER DIAGRAM
P-405.00	PLUMBING GAS RISER DIAGRAM SHEET #1 OF 2
P-406.00	PLUMBING GAS RISER DIAGRAM SHEET #2 OF 2
P-407.00	PLUMBING WATER RISER DIAGRAM SHEET #1 OF 3
P-408.00	PLUMBING WATER RISER DIAGRAM SHEET #2 OF 3
P-409.00	PLUMBING WATER RISER DIAGRAM SHEET #3 OF 3

CERTIFICATION

TO THE BEST OF THE APPLICANT'S KNOWLEDGE, BELIEF AND PROFESSIONAL JUDGMENT, THESE PLANS ARE IN COMPLIANCE WITH THE 2014 NYCECC.

BUILDING CODE TENANT PROTECTION PLAN NOTES:

ALL WORK SHALL COMPLY WITH SECTION 28-104.8.4 OF THE BUILDING CODE AS SUMMARIZED BELOW:

1. GENERAL: CONSTRUCTION DOCUMENTS FOR ALTERATIONS OF BUILDINGS IN WHICH ANY DWELLING UNIT WILL BE OCCUPIED DURING CONSTRUCTION SHALL INCLUDE A TENANT PROTECTION PLAN WITH SPECIFIC DETAILS THE DESCRIBE THE MEANS AND METHODS TO SAFEGUARD THE SAFETY AND HEALTH OF THE OCCUPANTS.
2. EGRESS: AT ALL TIMES IN THE COURSE OF CONSTRUCTION, PROVISION SHALL BE MADE FOR ADEQUATE EGRESS AS REQUIRED BY THIS CODE AND THE TENANT PROTECTION PLAN SHALL IDENTIFY THE EGRESS THAT WILL BE PROVIDED. REQUIRED EGRESS SHALL NOT BE OBSTRUCTED AT ANY TIME EXCEPT WHERE APPROVED BY THE COMMISSIONER.
3. FIRE SAFETY: ALL NECESSARY LAWS AND CONTROLS, INCLUDING THOSE WITH OCCUPIED DWELLINGS, AS WELL AS ADDITIONAL SAFETY MEASURES NECESSITATED BY THE CONSTRUCTION SHALL BE STRICTLY OBSERVED AND INCLUDE BUT ARE NOT LIMITED TO THE FOLLOWING:
   - A) ALL BUILDING MATERIALS STORED AT CONSTRUCTION AREA, AND/OR IN ANY AREA OF THE WORK SITE ARE TO BE SECURED IN A LOCKED AREA. ACCESS TO SUCH AREAS ARE TO BE CONTROLLED BY OWNER/GENERAL CONTRACTOR.
   - B) ALL MATERIALS ARE TO BE STORED IN AN ORDERLY FASHION.
   - C) ALL FLAMMABLE MATERIALS TO BE KEPT TIGHTLY SEALED IN THEIR RESPECTIVE.
   - D) ALL FLAMMABLE MATERIALS ARE TO BE USED AND STORED IN AN ADEQUATELY VENTILATED SPACE.
   - E) ALL ELECTRICAL POWER TO BE SHUT OFF WHERE THERE IS EXPOSED CONDUIT.
   - F) ALL ELECTRICAL POWER TO THE WORK SITE IS TO BE SHUT OFF AFTER WORKING HOURS.
4. HEALTH REQUIREMENTS
   - A) DEBRIS, DIRT AND DUST TO BE KEPT TO A MINIMUM AND CONFINED TO IMMEDIATE CONSTRUCTION AREA.
   - B) CONTRACTOR TO ISOLATE CONSTRUCTION AREA FROM OCCUPIED BUILDING AREA BY MEANS OF HEAVY WEIGHT DROP CLOTHS.
   - C) DEBRIS, DIRT, AND DUST TO BE CLEANED UP AND CLEANED FROM WORK SITE PERIODICALLY TO AVOID EXCESSIVE ACCUMULATION AS SAFETY MANUAL.
5. COMPLIANCE WITH HOUSING STANDARDS: THE REQUIREMENTS OF THE NEW YORK CITY HOUSING MAINTENANCE CODE, AND, WHERE APPLICABLE, THE NEW YORK STATE MULTIPLE DWELLING LAW SHALL BE STRICTLY OBSERVED.
6. STRUCTURAL SAFETY: NO STRUCTURAL WORK SHALL BE DONE THAT MAY ENDANGER THE OCCUPANTS.
7. NOISE CONTROL
   - A) CONSTRUCTION OPERATIONS WILL BE CONFINED TO NORMAL WORKING.
   - B) CONTRACTOR TO OBTAIN WRITTEN CONSENT OF ALL PARTIES AFFECTED BY HIS WORKING DURING OTHER THAN NORMAL WORKING HOURS.
   - C) CONTRACTOR SHALL OBTAIN AFTER HOUR WORK PERMIT FROM THE DEPARTMENT OF BUILDINGS AND APPLICABLE AGENCIES IF WORKING OTHER THAN NORMAL WORKING HOURS.
8. CONSTRUCTION OPERATIONS WILL NOT INVOLVE INTERRUPTION OF HEATING, WATER, OR ELECTRICAL SERVICES TO TENANTS OF BUILDING.
9. CONSTRUCTION WORK WILL BE CONFINED TO AREAS OF WORK DETAILED ON THIS PLAN AND WILL NOT CREATE DUST, DIRT, DEBRIS OR SUCH INCONVENIENCES TO OTHER RESIDENTIAL AREAS OF THE BUILDING.
10. THERE WILL BE NO ACCESS OF THE WORK SITE AREAS BY TENANTS OR THE PUBLIC DURING CONSTRUCTION OPERATIONS UNTIL OTHERWISE ALLOWED BY ENGINEER AND OR BUILDING OWNER.

UNIT PRICES:

THE CONTRACTOR SHALL SUBMIT UNIT PRICES TO CONCESSI ENGINEERING FOR ALL PLUMBING WORK TO BE INSTALLED UNDER THIS CONTRACT. IN LIEU OF CONTRACTOR FURNISHED UNIT PRICES, 2014 RS MEANS UNIT PRICES SHALL BE USED TO CALCULATE CHANGE ORDER COSTS.

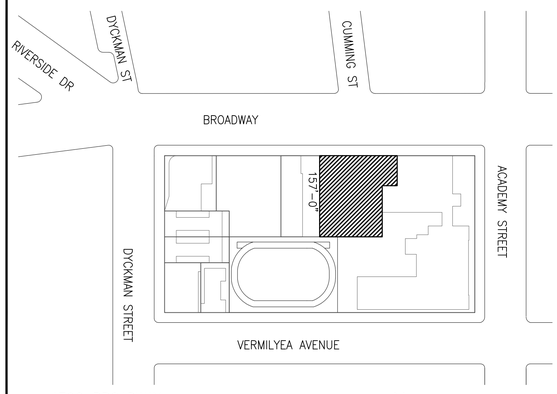

4790 BROADWAY
NEW YORK, NY 10034
BLOCK: 2233
TAX LOT: 13 & 20
ZONING DISTRICT: C4-4D

SITE PLAN
NOT TO SCALE

N.

BUILDING DEPARTMENT NOTE: "THIS PLAN IS APPROVED ONLY FOR WORK INDICATED ON THE APPLICATION SPECIFICATION SHEET. ALL OTHER MATTERS SHOWN ARE NOT TO BE RELIED UPON, OR TO BE CONSIDERED AS EITHER BEING APPROVED OR IN ACCORDANCE WITH APPLICABLE CODES".

ALTERATION OR RE-USE OF THIS DRAWING FOR OTHER THAN THIS PROJECT WITHOUT WRITTEN CONSENT OF THE ABOVE ENGINEER IS PROHIBITED BY LAW.

Client:
RANGER PROPERTIES
4790 BROADWAY
NEW YORK, NY 10034

Architect:
FOGARTY FINGER architecture | interiors
69 Walker St, New York, NY 10013
t 212 966 7450 f 212 966 7444

Library Architect:
Andrew Berman Architect, PLLC
77 Chambers Street, 4th Floor
New York, NY 10007
Tel 212.226.5998

Structural:
Thornton Tomasetti
51 Madison Avenue
New York, NY 10010
Tel 917.661.7800

MEP / FP:
Concessi Engineering, PC
499 7th Avenue, 11th Floor South Tower
New York, NY 10018
Tel 212.629.6810

FACADE:
SIMPSON GUMPERTZ & HEGER
550 7th Avenue, 10th Floor
New York, NY 10018
Tel 212.271.7000

CODE:
METROPOLIS
22 Courtland Street, 10th Floor
New York, NY 10007
Tel 212.233.6344

No.	Date	Issue
1	02/06/19	ISSUED FOR FILING / DD ESTIMATING

Project:
4790 BROADWAY
NEW YORK, NY 10034

Drawing Title:
PLUMBING SYMBOLS, NOTES, ABBREVIATIONS AND SITE PLAN

Seal & Signature:
STATE OF NEW YORK · ROBERT V. CONCESSI · LIC. 86705 · LICENSED PROFESSIONAL ENGINEER

DATE (MM-DD-YY): 11-02-2018
PROJECT No.: 7815.00
DRAWING BY: DP
CHK BY: JV/RC
DWG. No.: P-101.00
CADD FILE No.: –
01 OF 21

PLUMBING – ENERGY ANALYSIS – TABULAR METHOD

ENERGY ANALYSIS
(ASHRAE 90.1–2013) AS PER NYCECC 2016
CLIMATE ZONE 4A

ITEM DESCRIPTION	PROPOSED DESIGN VALUE	CODE PRESCRIPTIVE VALUE AND CITATION
7.4.1: LOAD CALCULATIONS	SYSTEM & EQUIPMENT HAS BEEN SIZED IN ACCORDANCE WITH MANUFACTURER'S GUIDELINES AND ACCEPTED ENGINEERS STANDARDS.	SYSTEM & EQUIPMENT HAS BEEN SIZED IN ACCORDANCE WITH MANUFACTURER'S GUIDELINES AND ACCEPTED ENGINEERS STANDARDS.
7.4.2: EQUIPMENT EFFICIENCY	SPECIFIED DOMESTIC HOT WATER HEATERS ARE NON–FIRING TYPE. THE HEATERS ARE SPECIFIED TO BE INSULATED WITH R–12.5 INSULATION.	WATER HEATING EQUIPMENT (TABLE 7.8): NON–FIRING HEATERS REQUIRE INSULATION WITH R VALUE OF R–12.5.
7.4.3: PIPE INSULATION (TABLE 6.8.3A & 3B)	DOMESTIC HOT & COLD WATER PIPING INSULATION IS SPECIFIED AS FOLLOWS: PIPING DIA. LESS THAN 1½"=1.0" PIPING DIA. 1½" AND GREATER=1.0"	PER TABLE 6.8.3A & 3B PIPING INSULATION CONDUCTIVITY 0.22 TO 0.28 AND THICKNESS: PIPING DIA. LESS THAN 1½"=0.5" PIPING DIA. 1½" AND GREATER=1.0"
7.4.4.1: TEMPERATURE CONTROLS	SPECIFIED DOMESTIC HOT WATER HEATERS HAVE CONTROL SETTINGS BETWEEN 40 AND 140 DEG. F.	MIN. 120 DEG. F. CONTROL SETTING.
7.4.4.2: TEMPERATURE MAINTENANCE CONTROLS	SYSTEM WILL BE PROVIDED WITH A AQUASTAT FOR SHUTDOWN OF UNNECESSARY HW CIRCULATION.	TIME CLOCK OR CONTROL TO TURN OFF USAGE TEMPERATURE MAINTENANCE FUNCTION DURING NO–USAGE PERIODS.
7.4.4.3: OUTLET TEMPERATURE CONTROLS	FIXTURE DELIVERY TEMPERATURE IS LIMITED TO NOT GREATER THAN 110 DEG. F. VIA MIXING VALVES (THERMOSTATIC MIXING VALVES ARE PROVIDED AT OUTLET OF HEATERS).	MAXIMUM FUTURE DELIVERY TEMPERATURE OF 110 DEG. F.

FIXTURE CONNECTION SCHEDULE

FIXTURE	WASTE	VENT	CW	HW
PANTRY SINK	2"	2"	1/2"	1/2"
DISH WASHER	2"	–	–	1/2"
ICE MAKER	–	–	1/2"	–
COFFEE MAKER	–	–	1/2"	–
REFRIGERATOR	–	–	1/2"	–
FLAVIA (COFFEE MAKER)	–	–	1/2"	–
CHILLED WATER TANK W/CUP SINK	2"	2"	1/2"	–
WATER CLOSETS	3"	2"	1 1/4"	–
URINAL	2"	2"	1 1/4"	–
LAVATORIES	2"	1 1/2"	1/2"	1/2"
TRAP PRIMER UNIT	–	–	1/2"	–
SINK BASIN FLOOR MOUNTED	2"	1 1/2"	3/4"	3/4"
WATER HEATER	–	–	3/4"	–
FLOOR DRAIN	3"	1 1/2"	–	–
FUNNEL DRAIN	3"	1 1/2"	–	–

NOTES:
1. SIZES OF BRANCH WATER PIPING SHALL BE NOT LESS THAN LISTED ABOVE WITH ACTUAL CONNECTION SIZES AS REQUIRED BY CONNECTIONS ON FIXTURE.
2. REFER TO SPECIFICATION FOR MODEL NUMBERS. PLUMBING FIXTURES ARE SPECIFIED BY THE ARCHITECT.

HEAT TRACING SPECIFICATION– FREEZE PROTECTION

1) ALL PLUMBING PIPING IN THE WORK AREA OR EXPOSED TO FREEZING SHALL BE TRACED WITH A SINGLE PASS OF HEATER CABLE, NELSON ELECTRIC TYPE CLT–JT OR APPROVED EQUAL. POWER TO BE PROVIDED BY A 120/208 VOLT BREAKER, RATED 20 AMPS. PIPE TO BE INSULATED WITH 1.5" THICK FIBERGLASS INSULATION AND WEATHERPROOF LAGGING.
2) AT THE BEGINNING OF EACH HEATER CIRCUIT, PROVIDE A COMPLETE TERMINATION KIT WITH JUNCTION BOX, NELSON ELECTRIC TYPE PLTBC OR APPROVED EQUAL.
3) HEATER TO BE FASTENED IN STRAIGHT LINE ALONG PIPE WITH FIBERGLASS TAPE ON 1' INTERVALS.
4) WARNING SIGNS TO BE AFFIXED TO OUTSIDE OF INSULATION ON 10' CENTERS.
5) CONTROL ALL HEATER SEGMENTS WITH AN AMBIENT SENSING ELECTRONIC CONTROLLER, NELSON TYPE CM2001 OR EQUAL AS APPROVED BY THE ENGINEER. CONTROLLER TO BE LOCATED IN ATM BACK ROOM. CONTROLLER SHALL PROVIDE HIGH AND LOW CURRENT ALARMS, GROUND FAULT CURRENT ALARM AND TRIP, HIGH AND LOW VOLTAGE ALARMS, AND SHALL BE SELF–TESTING. CONTROLLER SHALL BE PROGRAMMED IN FAIL SAFE MODE WITH HEATER CABLES ENERGIZED IN THE EVENT OF CONTROLLER MALFUNCTION.
6) CABLE TO BE MEGGER TESTED IN ACCORDANCE WITH MANUFACTURERS RECOMMENDATIONS ON RECEIPT OF MATERIAL, AFTER CABLE INSTALLATION, AND AFTER INSULATION INSTALLATION. A RECORD OF THESE TEST RESULTS SHALL BE PROVIDED TO THE ENGINEER.

BUILDING DEPARTMENT NOTE: "THIS PLAN IS APPROVED ONLY FOR WORK INDICATED ON THE APPLICATION SPECIFICATION SHEET. ALL OTHER MATTERS SHOWN ARE NOT TO BE RELIED UPON, OR TO BE CONSIDERED AS EITHER BEING APPROVED OR IN ACCORDANCE WITH APPLICABLE CODES".

ALTERATION OR RE–USE OF THIS DRAWING FOR OTHER THAN THIS PROJECT WITHOUT WRITTEN CONSENT OF THE ABOVE ENGINEER IS PROHIBITED BY LAW.

Client:
RANGER PROPERTIES
4790 BROADWAY
NEW YORK, NY 10034

Architect:
FOGARTY FINGER architecture | interiors
69 Walker St, New York, NY 10013
t 212 966 7450 f 212 966 7444

Library Architect:
Andrew Berman Architect, PLLC
77 Chambers Street, 4th Floor
New York, NY 10007
Tel 212.226.5998

Structural:
Thornton Tomasetti
51 Madison Avenue
New York, NY 10010
Tel 917.661.7800

MEP / FP:
Concessi Engineering, PC
499 7th Avenue, 11th Floor South Tower
New York, NY 10018
Tel 212.629.6810

FACADE:
SIMPSON GUMPERTZ & HEGER
550 7th Avenue, 10th Floor
New York, NY 10018
Tel 212.271.7000

CODE:
METROPOLIS
22 Courtland Street, 10th Floor
New York, NY 10007
Tel 212.233.6344

No.	Date	Issue
1	02/06/19	ISSUED FOR FILING / DD ESTIMATING

Project:
4790 BROADWAY
NEW YORK, NY 10034

Drawing Title:
PLUMBING
ENERGY ANALYSIS AND
SCHEDULE

Seal & Signature:
STATE OF NEW YORK · ROBERT J. CONCESSI · No. 085705 · LICENSED PROFESSIONAL ENGINEER

DATE (MM–DD–YY): 11–02–2018
PROJECT No.: 7815.00
DRAWING BY: DP
CHK BY: JV/RC
DWG. No.: P–102.00
CADD FILE No.: –
02 OF 21

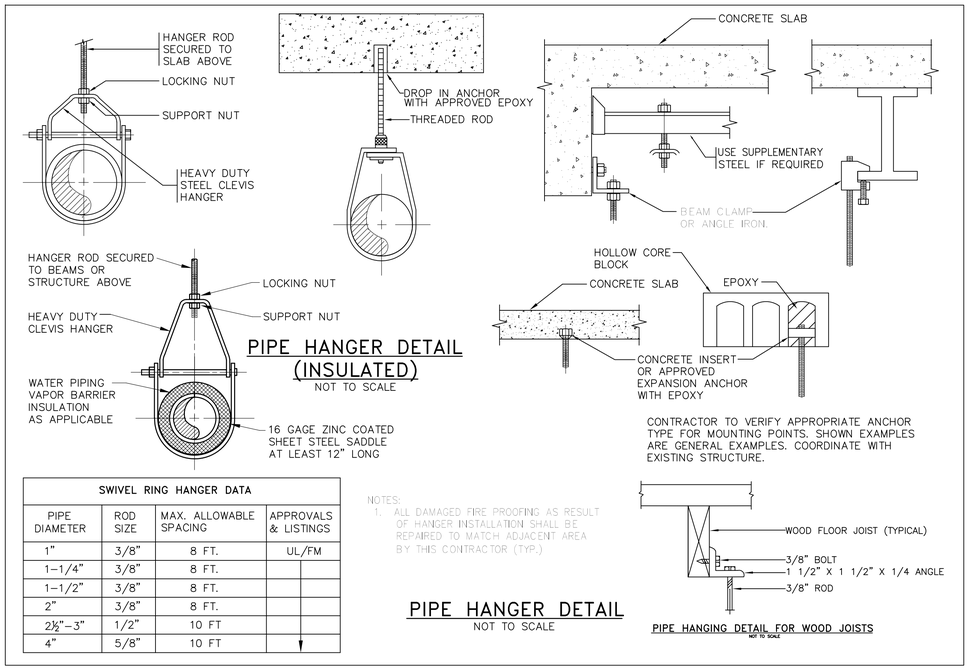

PIPE HANGER DETAIL (INSULATED)
NOT TO SCALE

PIPE HANGER DETAIL
NOT TO SCALE

PIPE HANGING DETAIL FOR WOOD JOISTS
NOT TO SCALE

SWIVEL RING HANGER DATA			
PIPE DIAMETER	ROD SIZE	MAX. ALLOWABLE SPACING	APPROVALS & LISTINGS
1"	3/8"	8 FT.	UL/FM
1-1/4"	3/8"	8 FT.	
1-1/2"	3/8"	8 FT.	
2"	3/8"	8 FT.	
2½"-3"	1/2"	10 FT	
4"	5/8"	10 FT	

NOTES:
1. ALL DAMAGED FIRE PROOFING AS RESULT OF HANGER INSTALLATION SHALL BE REPAIRED TO MATCH ADJACENT AREA BY THIS CONTRACTOR (TYP.)

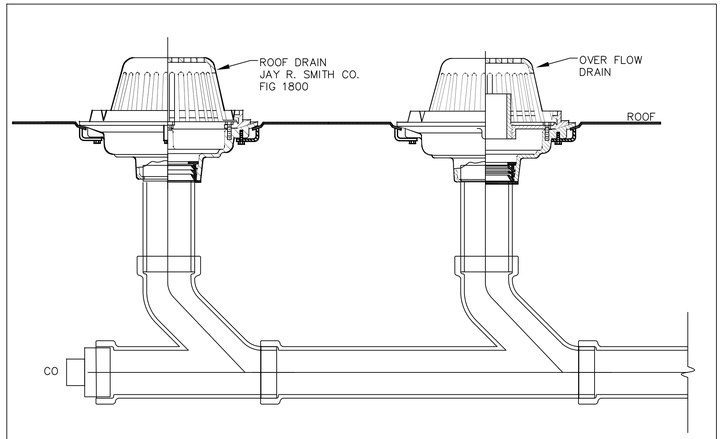

ROOF & OVER FLOW DRAIN DETAIL
NOT TO SCALE

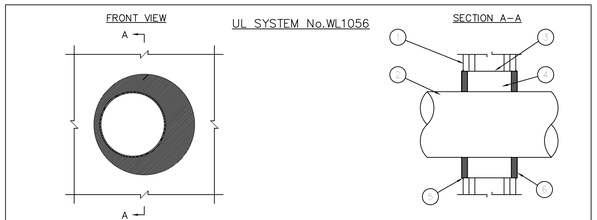

1. GYPSUM WALL ASSEMBLY (UL CLASSIFIED U300 OR U400 SERIES) (1-HR OR 2-HR FIRE RATING).
2. PENETRATING ITEM TO BE ONE OF THE FOLLOWING:
   A. MAXIMUM 12" NOMINAL DIAMETER STEEL PIPE (SCHEDULE 40 OR HEAVIER).
   B. MAXIMUM 12" NOMINAL DIAMETER CAST IRON PIPING
   C. MAXIMUM 4" NOMINAL DIAMETER COPPER PIPE.
3. MINIMUM 24 GAUGE SHEET METAL SLEEVE EXTENDING 1/2" PAST EACH SURFACE OF WALL.
4. MINIMUM 4-1/2" THICKNESS MINERAL WOOL (MIN. 4 PCF DENSITY) TIGHTLY PACKED.
5. A GENEROUS BEAD OF HILTI FS-ONE INTUMESCENT FIRESTOP SEALANT AROUND PERIMETER OF SLEEVE.
6. MINIMUM 3/4" DEPTH HILTI FS-ONE INTUMESCENT FIRESTOP SEALANT.

NOTE:
1. MAXIMUM DIAMETER OF OPENING = 18-3/4"
2. ANNULAR SPACE = MINIMUM 3/4", MAXIMUM 4-1/2"
3. OPENING SHALL BE 1-1/2" TO 6" LARGER THAN OUTSIDE DIAMETER OF PIPE.

FIRESTOPPING OF METAL PIPE THROUGH 1-HR OR 2-HR RATED GYPSUM WALL.
NOT TO SCALE

NOTE:

DETAIL IS BASED ON HILTI UL SYSTEM No. WL1056 OTHER MANUFACTURER WILL BE ACCEPTED. REFER TO SPECIFICATIONS

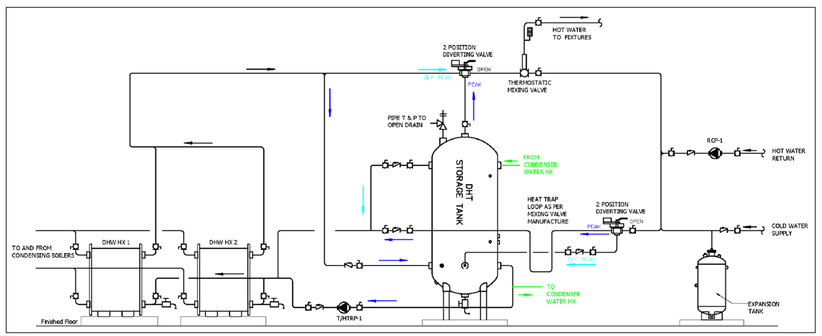

DOMESTIC HOT WATER SYSTEM
N.T.S.

BUILDING DEPARTMENT NOTE: "THIS PLAN IS APPROVED ONLY FOR WORK INDICATED ON THE APPLICATION SPECIFICATION SHEET. ALL OTHER MATTERS SHOWN ARE NOT TO BE RELIED UPON, OR TO BE CONSIDERED AS EITHER BEING APPROVED OR IN ACCORDANCE WITH APPLICABLE CODES".

ALTERATION OR RE-USE OF THIS DRAWING FOR OTHER THAN THIS PROJECT WITHOUT WRITTEN CONSENT OF THE ABOVE ENGINEER IS PROHIBITED BY LAW.

Client:
RANGER PROPERTIES
4790 BROADWAY
NEW YORK, NY 10034

Architect:
FOGARTY FINGER architecture | interiors
69 Walker St, New York, NY 10013
t 212 966 7450 f 212 966 7444

Library Architect:
Andrew Berman Architect, PLLC
77 Chambers Street, 4th Floor
New York, NY 10007
Tel 212.226.5998

Structural:
Thornton Tomasetti
51 Madison Avenue
New York, NY 10010
Tel 917.661.7800

MEP / FP:
Concessi Engineering, PC
499 7th Avenue, 11th Floor South Tower
New York, NY 10018
Tel 212.629.6810

FACADE:
SIMPSON GUMPERTZ & HEGER
550 7th Avenue, 10th Floor
New York, NY 10018
Tel 212.271.7000

CODE:
METROPOLIS
22 Courtland Street, 10th Floor
New York, NY 10007
Tel 212.233.6344

No.	Date	Issue
1	02/06/19	ISSUED FOR FILING / DD ESTIMATING

Project:
4790 BROADWAY
NEW YORK, NY 10034

Drawing Title:
PLUMBING DETAILS

Seal & Signature:
STATE OF NEW YORK · ROBERT V. CONESSA · No. 067105 · LICENSED PROFESSIONAL ENGINEER

DATE (MM-DD-YY): 11-02-2018
PROJECT No.: 7815.00
DRAWING BY: DP
CHK BY: JV/RC
DWG. No.: P-201.00
CADD FILE No.: –
03 OF 21

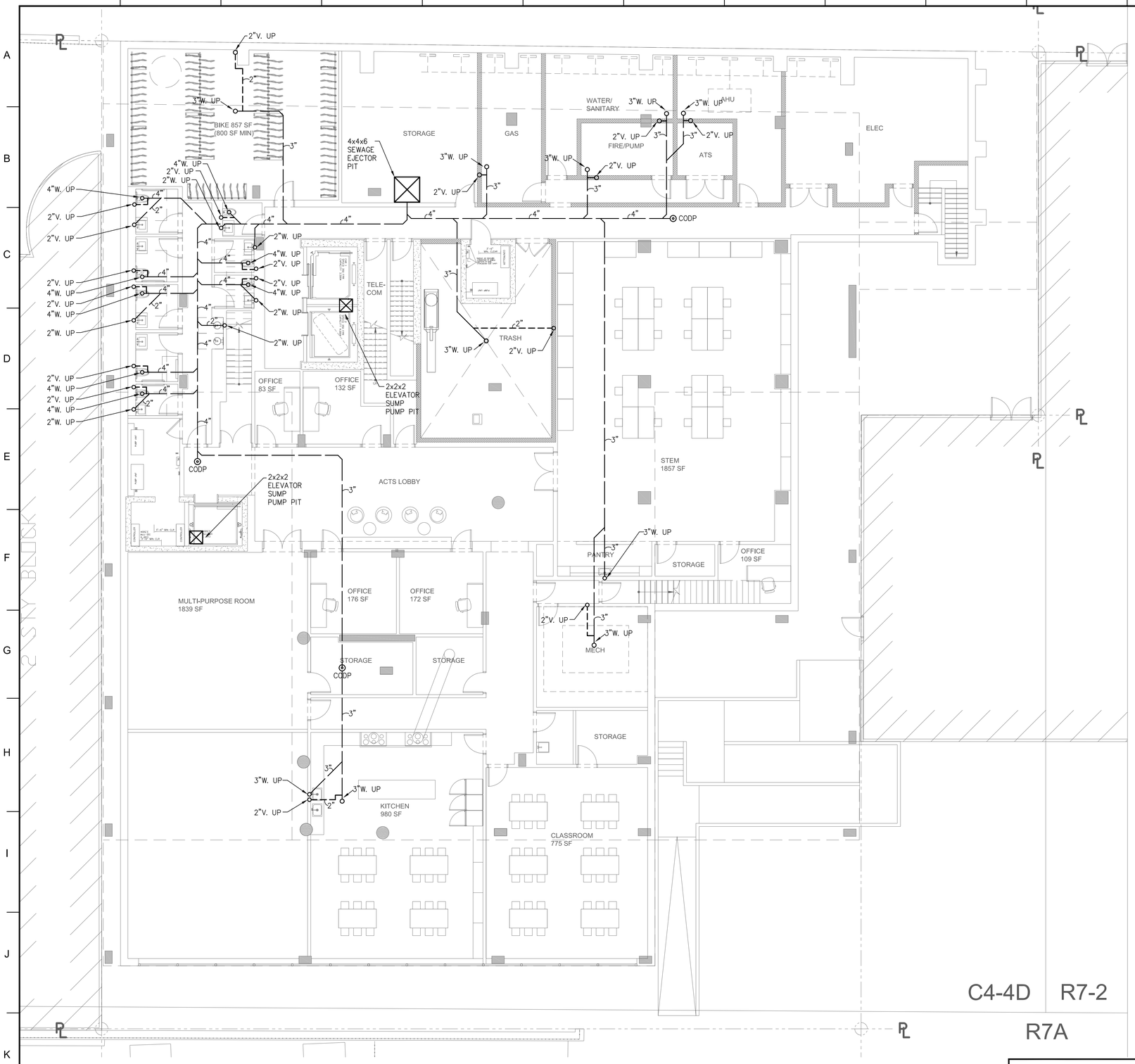

1 CELLAR FLOOR PLAN

SCALE: 1/8"=1'-0"

BUILDING DEPARTMENT NOTE: "THIS PLAN IS APPROVED ONLY FOR WORK INDICATED ON THE APPLICATION SPECIFICATION SHEET. ALL OTHER MATTERS SHOWN ARE NOT TO BE RELIED UPON, OR TO BE CONSIDERED AS EITHER BEING APPROVED OR IN ACCORDANCE WITH APPLICABLE CODES".

ALTERATION OR RE-USE OF THIS DRAWING FOR OTHER THAN THIS PROJECT WITHOUT WRITTEN CONSENT OF THE ABOVE ENGINEER IS PROHIBITED BY LAW.

Client:

RANGER PROPERTIES
4790 BROADWAY
NEW YORK, NY 10034

Architect:

FOGARTY FINGER architecture | interiors

69 Walker St, New York, NY 10013
t 212 966 7450 f 212 966 7444

Library Architect:

Andrew Berman Architect, PLLC
77 Chambers Street, 4th Floor
New York, NY 10007
Tel 212.226.5998

Structural:

Thornton Tomasetti
51 Madison Avenue
New York, NY 10010
Tel 917.661.7800

MEP / FP:

Concessi Engineering, PC
499 7th Avenue, 11th Floor South Tower
New York, NY 10018
Tel 212.629.6810

FACADE:

SIMPSON GUMPERTZ & HEGER
550 7th Avenue, 10th Floor
New York, NY 10018
Tel 212.271.7000

CODE:

METROPOLIS
22 Courtland Street, 10th Floor
New York, NY 10007
Tel 212.233.6344

No.	Date	Issue
1	02/06/19	ISSUED FOR FILING / DD ESTIMATING

Project:

4790 BROADWAY
NEW YORK, NY 10034

Drawing Title:

PLUMBING
CELLAR UNDERGROUND
PIPING PLAN

Seal & Signature:

STATE OF NEW YORK · ROBERT V. CONCESSI · No. 085705 · LICENSED PROFESSIONAL ENGINEER

DATE (MM-DD-YY):	11-02-2018
PROJECT No.:	7815.00
DRAWING BY:	DP
CHK BY:	JV/RC
DWG. No.:	P-301.00
CADD FILE No.:	–

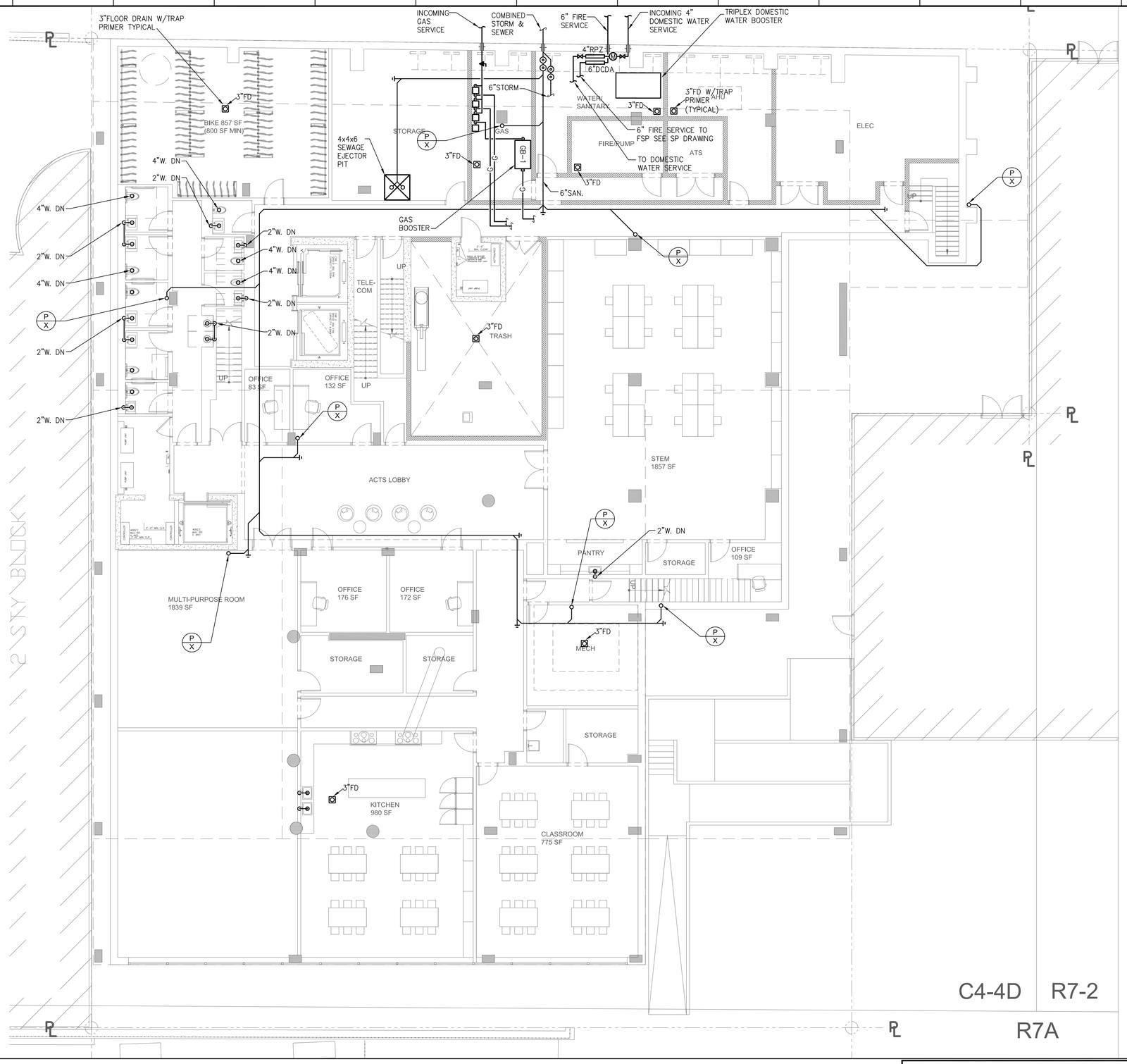

1 CELLAR FLOOR PLAN

SCALE: 1/8"=1'-0"

BUILDING DEPARTMENT NOTE: "THIS PLAN IS APPROVED ONLY FOR WORK INDICATED ON THE APPLICATION SPECIFICATION SHEET. ALL OTHER MATTERS SHOWN ARE NOT TO BE RELIED UPON, OR TO BE CONSIDERED AS EITHER BEING APPROVED OR IN ACCORDANCE WITH APPLICABLE CODES".

ALTERATION OR RE-USE OF THIS DRAWING FOR OTHER THAN THIS PROJECT WITHOUT WRITTEN CONSENT OF THE ABOVE ENGINEER IS PROHIBITED BY LAW.

Client:

RANGER PROPERTIES
4790 BROADWAY
NEW YORK, NY 10034

Architect:

FOGARTY FINGER architecture | interiors

69 Walker St, New York, NY 10013
t 212 966 7450 f 212 966 7444

Library Architect:

Andrew Berman Architect, PLLC
77 Chambers Street, 4th Floor
New York, NY 10007
Tel 212.226.5998

Structural:

Thornton Tomasetti
51 Madison Avenue
New York, NY 10010
Tel 917.661.7800

MEP / FP:

Concessi Engineering, PC
499 7th Avenue, 11th Floor South Tower
New York, NY 10018
Tel 212.629.6810

FACADE:

SIMPSON GUMPERTZ & HEGER
550 7th Avenue, 10th Floor
New York, NY 10018
Tel 212.271.7000

CODE:

METROPOLIS
22 Courtland Street, 10th Floor
New York, NY 10007
Tel 212.233.6344

No.	Date	Issue
1	02/06/19	ISSUED FOR FILING / DD ESTIMATING

Project:

4790 BROADWAY
NEW YORK, NY 10034

Drawing Title:

PLUMBING
CELLAR ABOVE GROUND
PIPING PLAN

Seal & Signature:

STATE OF NEW YORK · ROBERT V. CONCESSI · No. 067105 · LICENSED PROFESSIONAL ENGINEER

DATE (MM-DD-YY):	11-02-2018
PROJECT No.:	7815.00
DRAWING BY:	DP
CHK BY:	JV/RC
DWG. No.:	P-302.00
CADD FILE No.:	–

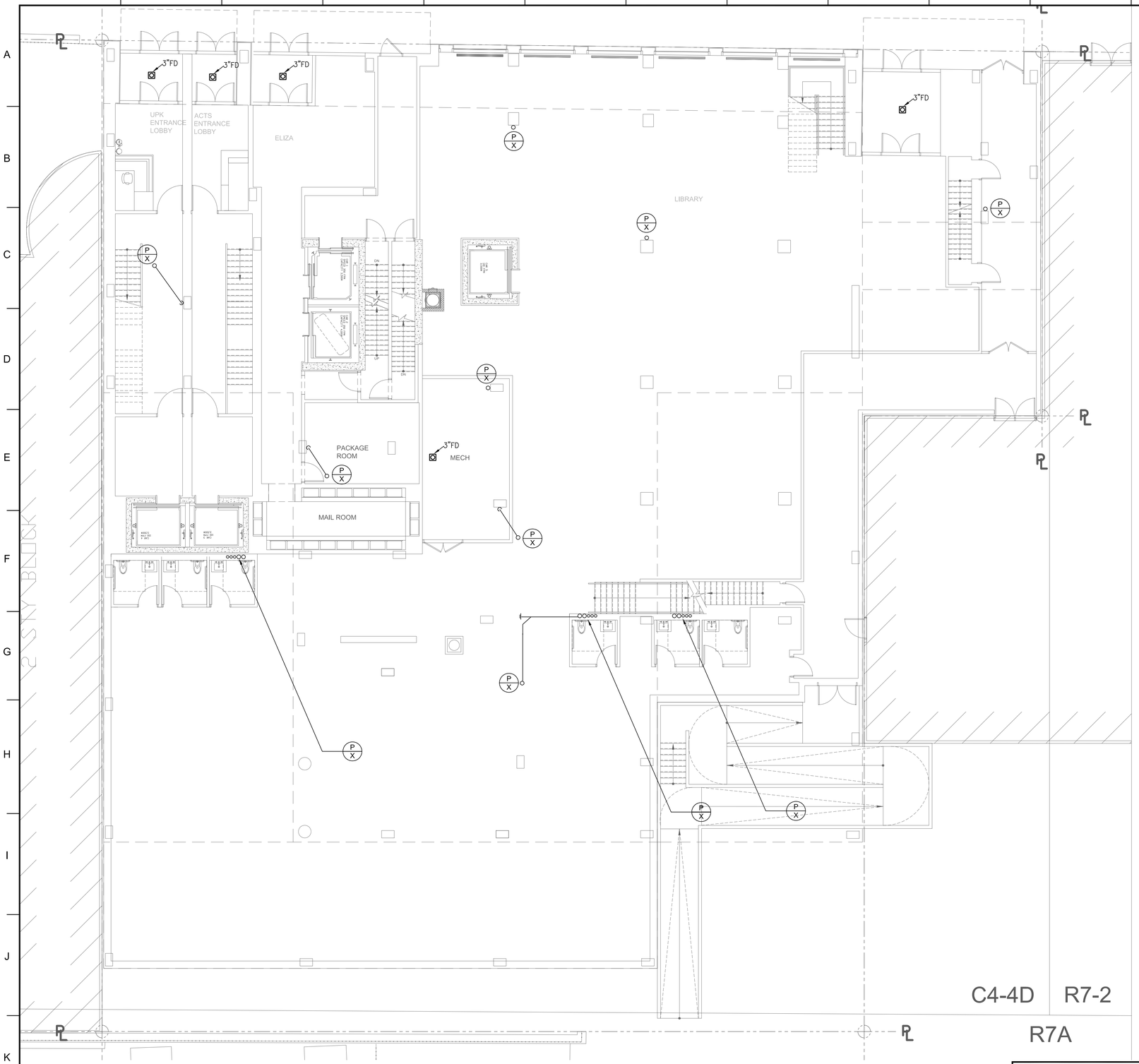

1 GROUND FLOOR PLAN
SCALE: 1/8"=1'-0"

BUILDING DEPARTMENT NOTE: "THIS PLAN IS APPROVED ONLY FOR WORK INDICATED ON THE APPLICATION SPECIFICATION SHEET. ALL OTHER MATTERS SHOWN ARE NOT TO BE RELIED UPON, OR TO BE CONSIDERED AS EITHER BEING APPROVED OR IN ACCORDANCE WITH APPLICABLE CODES".

ALTERATION OR RE-USE OF THIS DRAWING FOR OTHER THAN THIS PROJECT WITHOUT WRITTEN CONSENT OF THE ABOVE ENGINEER IS PROHIBITED BY LAW.

Client:

RANGER PROPERTIES
4790 BROADWAY
NEW YORK, NY 10034

Architect:

FOGARTY FINGER
architecture | interiors
69 Walker St, New York, NY 10013
t 212 966 7450 f 212 966 7444

Library Architect:

Andrew Berman Architect, PLLC
77 Chambers Street, 4th Floor
New York, NY 10007
Tel 212.226.5998

Structural:

Thornton Tomasetti
51 Madison Avenue
New York, NY 10010
Tel 917.661.7800

MEP / FP:

Concessi Engineering, PC
499 7th Avenue, 11th Floor South Tower
New York, NY 10018
Tel 212.629.6810

FACADE:

SIMPSON GUMPERTZ & HEGER
550 7th Avenue, 10th Floor
New York, NY 10018
Tel 212.271.7000

CODE:

METROPOLIS
22 Courtland Street, 10th Floor
New York, NY 10007
Tel 212.233.6344

No.	Date	Issue
1	02/06/19	ISSUED FOR FILING / DD ESTIMATING

Project:

4790 BROADWAY
NEW YORK, NY 10034

Drawing Title:

PLUMBING
GROUND FLOOR PLAN

Seal & Signature:

STATE OF NEW YORK · ROBERT L. CONCESSI · No. 86705 · LICENSED PROFESSIONAL ENGINEER

DATE (MM-DD-YY): 11-02-2018
PROJECT No.: 7815.00
DRAWING BY: DP
CHK. BY: JV/RC
DWG. No.: P-303.00
CADD FILE No.: –
06 OF 21

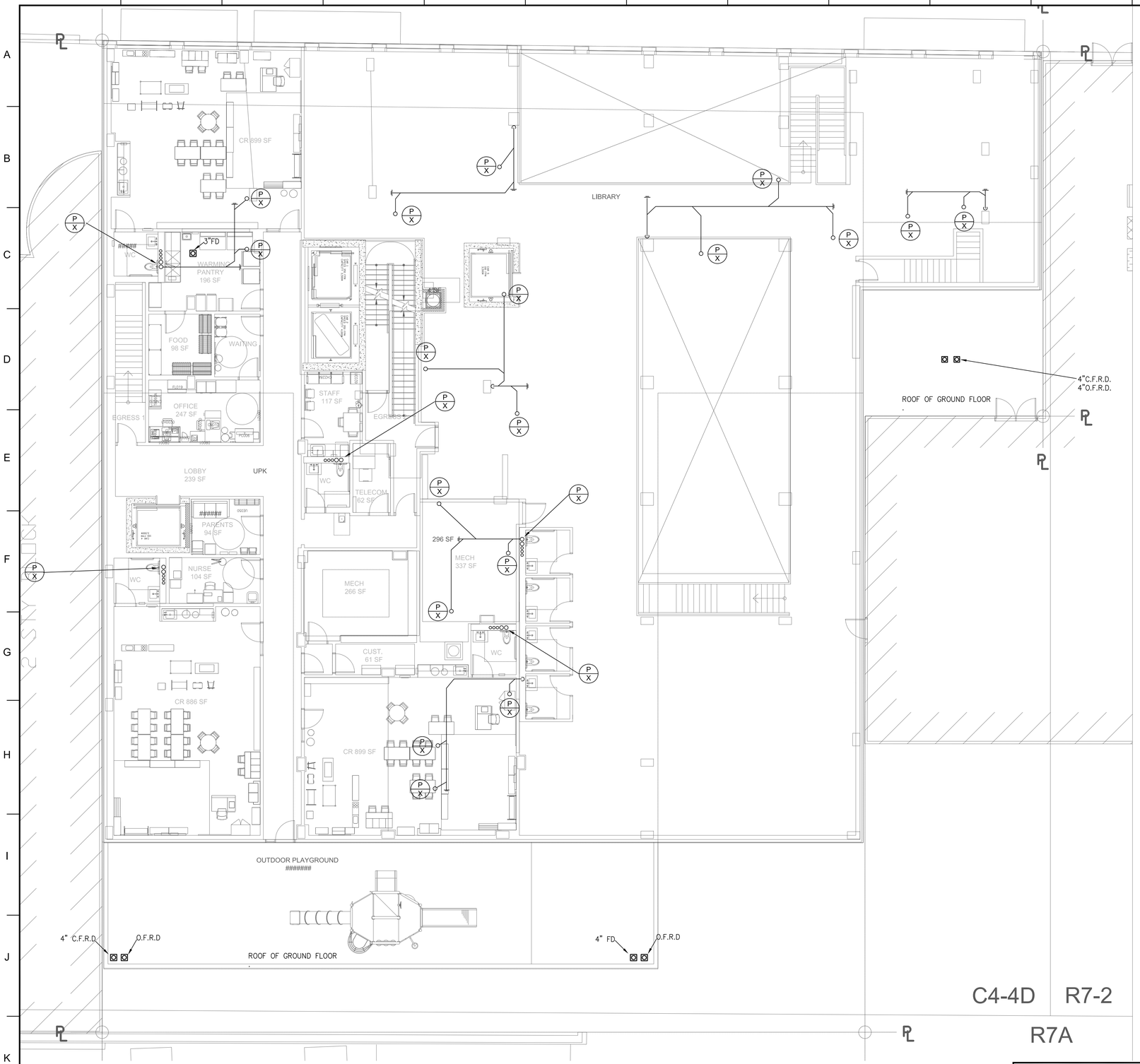

1 2ND FLOOR PLAN
SCALE: 1/8"=1'-0"

BUILDING DEPARTMENT NOTE: "THIS PLAN IS APPROVED ONLY FOR WORK INDICATED ON THE APPLICATION SPECIFICATION SHEET. ALL OTHER MATTERS SHOWN ARE NOT TO BE RELIED UPON, OR TO BE CONSIDERED AS EITHER BEING APPROVED OR IN ACCORDANCE WITH APPLICABLE CODES".

ALTERATION OR RE-USE OF THIS DRAWING FOR OTHER THAN THIS PROJECT WITHOUT WRITTEN CONSENT OF THE ABOVE ENGINEER IS PROHIBITED BY LAW.

Client:

RANGER PROPERTIES
4790 BROADWAY
NEW YORK, NY 10034

Architect:

FOGARTY FINGER
architecture | interiors
69 Walker St, New York, NY 10013
t 212 966 7450 f 212 966 7444

Library Architect:

Andrew Berman Architect, PLLC
77 Chambers Street, 4th Floor
New York, NY 10007
Tel 212.226.5998

Structural:

Thornton Tomasetti
51 Madison Avenue
New York, NY 10010
Tel 917.661.7800

MEP / FP:

Concessi Engineering, PC
499 7th Avenue, 11th Floor South Tower
New York, NY 10018
Tel 212.629.6810

FACADE:

SIMPSON GUMPERTZ & HEGER
550 7th Avenue, 10th Floor
New York, NY 10018
Tel 212.271.7000

CODE:

METROPOLIS
22 Courtland Street, 10th Floor
New York, NY 10007
Tel 212.233.6344

No.	Date	Issue
1	02/06/19	ISSUED FOR FILING / DD ESTIMATING

Project:

4790 BROADWAY
NEW YORK, NY 10034

Drawing Title:

PLUMBING
2ND FLOOR PLAN

Seal & Signature:

STATE OF NEW YORK · ROBERT J. CONESSI · No. 86705 · LICENSED PROFESSIONAL ENGINEER

DATE (MM-DD-YY):	11-02-2018
PROJECT No.:	7815.00
DRAWING BY:	DP
CHK BY:	JV/RC
DWG. No.:	P-304.00
CADD FILE No.:	07 OF 21

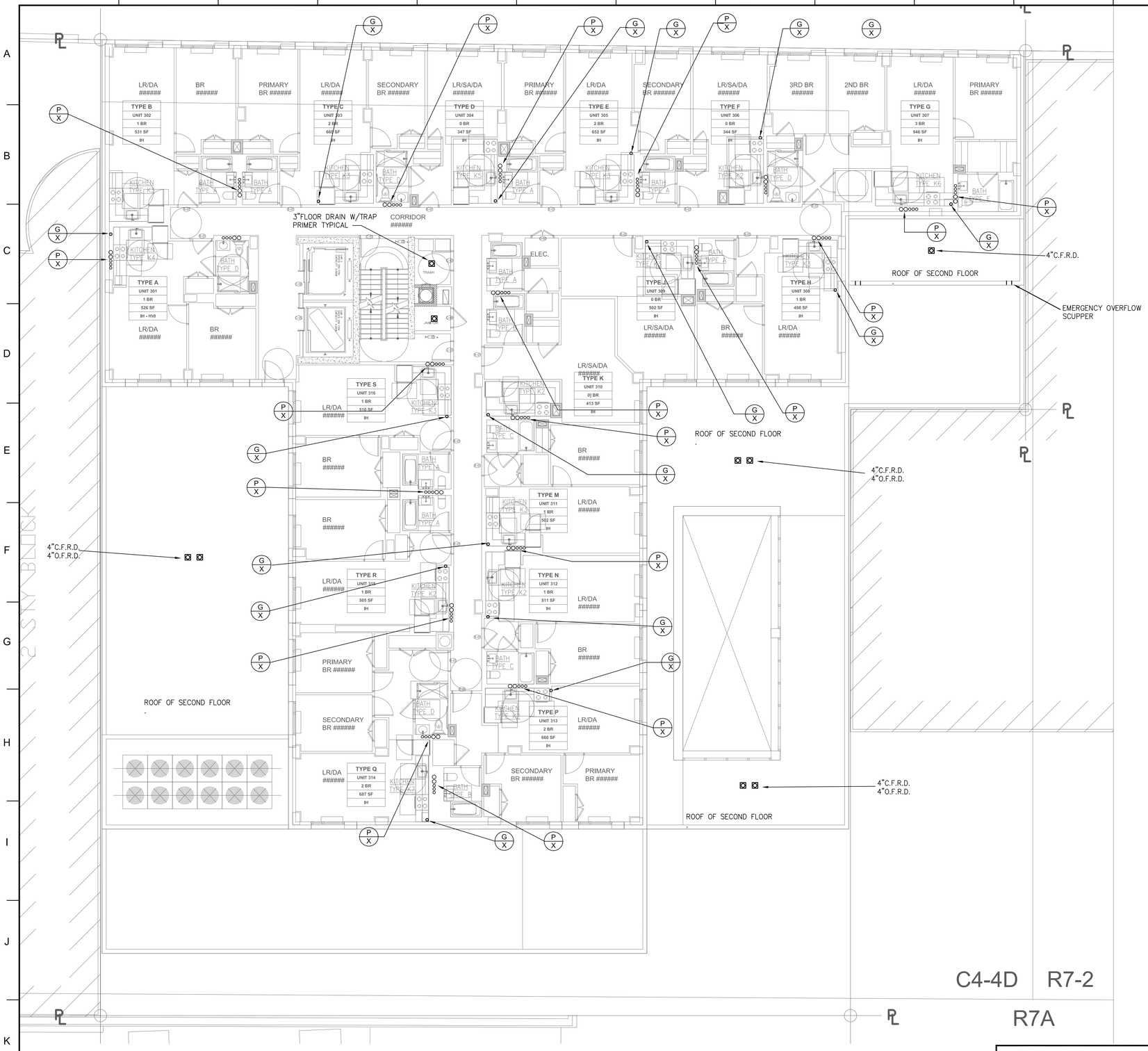

1 3RD - 10TH FLOOR PLAN
SCALE: 1/8"=1'-0"

BUILDING DEPARTMENT NOTE: "THIS PLAN IS APPROVED ONLY FOR WORK INDICATED ON THE APPLICATION SPECIFICATION SHEET. ALL OTHER MATTERS SHOWN ARE NOT TO BE RELIED UPON, OR TO BE CONSIDERED AS EITHER BEING APPROVED OR IN ACCORDANCE WITH APPLICABLE CODES".

ALTERATION OR RE-USE OF THIS DRAWING FOR OTHER THAN THIS PROJECT WITHOUT WRITTEN CONSENT OF THE ABOVE ENGINEER IS PROHIBITED BY LAW.

Client:
RANGER PROPERTIES
4790 BROADWAY
NEW YORK, NY 10034

Architect:
FOGARTY FINGER architecture | interiors
69 Walker St, New York, NY 10013
t 212 966 7450 f 212 966 7444

Library Architect:
Andrew Berman Architect, PLLC
77 Chambers Street, 4th Floor
New York, NY 10007
Tel 212.226.5998

Structural:
Thornton Tomasetti
51 Madison Avenue
New York, NY 10010
Tel 917.661.7800

MEP / FP:
Concessi Engineering, PC
499 7th Avenue, 11th Floor South Tower
New York, NY 10018
Tel 212.629.6810

FACADE:
SIMPSON GUMPERTZ & HEGER
550 7th Avenue, 10th Floor
New York, NY 10018
Tel 212.271.7000

CODE:
METROPOLIS
22 Courtland Street, 10th Floor
New York, NY 10007
Tel 212.233.6344

No.	Date	Issue
1	02/06/19	ISSUED FOR FILING / DD ESTIMATING

Project:
4790 BROADWAY
NEW YORK, NY 10034

Drawing Title:
PLUMBING
3RD FLOOR PLAN

Seal & Signature:
STATE OF NEW YORK ROBERT L. CONCESSI No. 86705 LICENSED PROFESSIONAL ENGINEER

DATE (MM-DD-YY): 11-02-2018
PROJECT No.: 7815.00
DRAWING BY: DP
CHK BY: JV/RC
DWG. No.: P-305.00
CADD FILE No.: –
08 OF 21

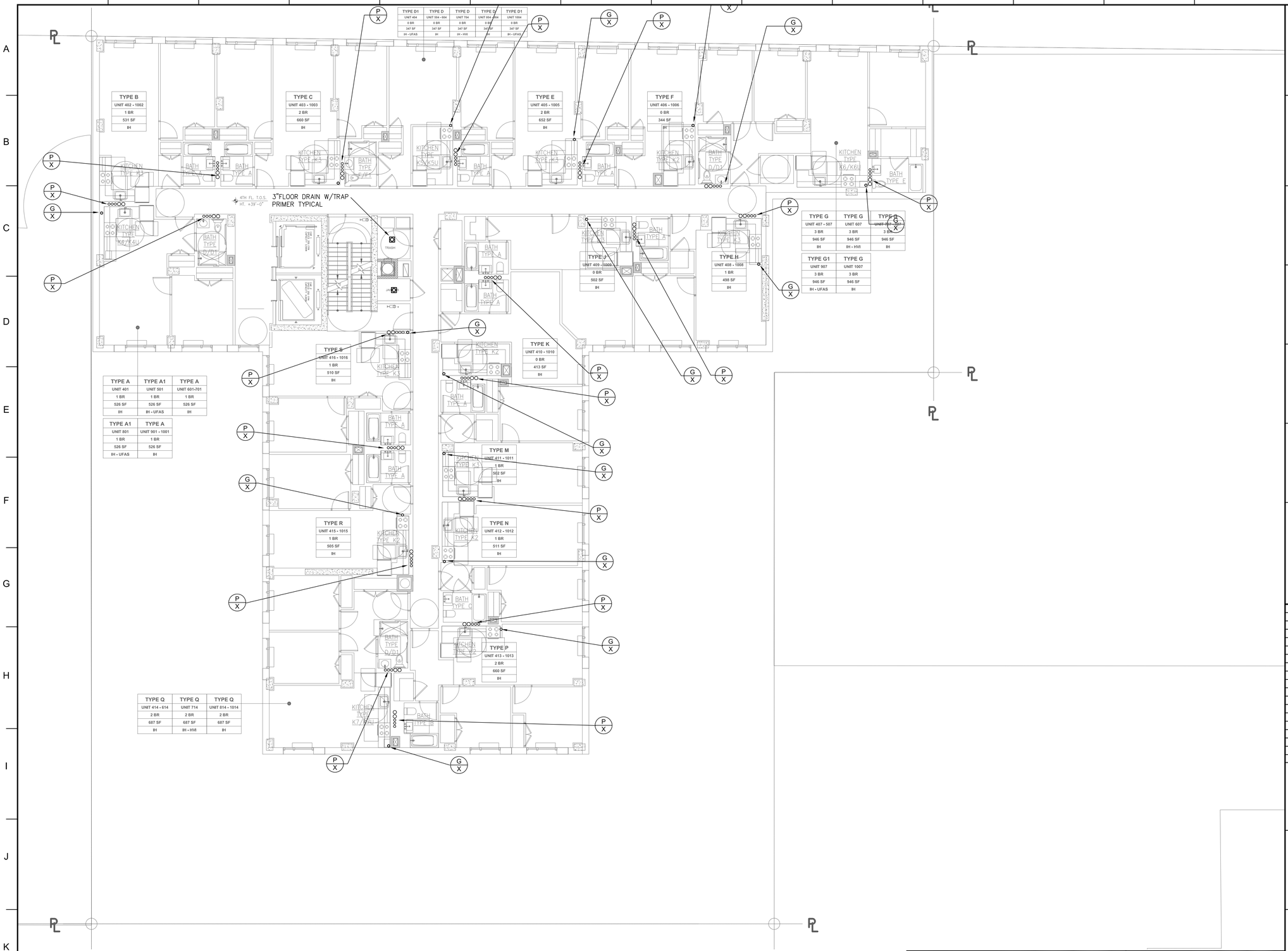

1 4TH - 10TH FLOOR PLAN
SCALE: 1/8"=1'-0"

BUILDING DEPARTMENT NOTE: "THIS PLAN IS APPROVED ONLY FOR WORK INDICATED ON THE APPLICATION SPECIFICATION SHEET. ALL OTHER MATTERS SHOWN ARE NOT TO BE RELIED UPON, OR TO BE CONSIDERED AS EITHER BEING APPROVED OR IN ACCORDANCE WITH APPLICABLE CODES".

ALTERATION OR RE-USE OF THIS DRAWING FOR OTHER THAN THIS PROJECT WITHOUT WRITTEN CONSENT OF THE ABOVE ENGINEER IS PROHIBITED BY LAW.

Client:

RANGER PROPERTIES
4790 BROADWAY
NEW YORK, NY 10034

Architect:

FOGARTY FINGER
architecture | interiors
69 Walker St, New York, NY 10013
t 212 966 7450 f 212 966 7444

Library Architect:

Andrew Berman Architect, PLLC
77 Chambers Street, 4th Floor
New York, NY 10007
Tel 212.226.5998

Structural:

Thornton Tomasetti
51 Madison Avenue
New York, NY 10010
Tel 917.661.7800

MEP / FP:

Concessi Engineering, PC
499 7th Avenue, 11th Floor South Tower
New York, NY 10018
Tel 212.629.6810

FACADE:

SIMPSON GUMPERTZ & HEGER
550 7th Avenue, 10th Floor
New York, NY 10018
Tel 212.271.7000

CODE:

METROPOLIS
22 Courtland Street, 10th Floor
New York, NY 10007
Tel 212.233.6344

No.	Date	Issue
1	02/06/19	ISSUED FOR FILING / DD ESTIMATING

Project:

4790 BROADWAY
NEW YORK, NY 10034

Drawing Title:

PLUMBING
4TH THRU 10TH
FLOOR PLAN

Seal & Signature:

STATE OF NEW YORK
ROBERT L. CONCESSI
No. 86705
LICENSED PROFESSIONAL ENGINEER

DATE (MM-DD-YY):	11-02-2018
PROJECT No.:	7815.00
DRAWING BY:	DP
CHK BY:	JV/RC
DWG. No.:	P-306.00
CADD FILE No.:	–

09 OF 21

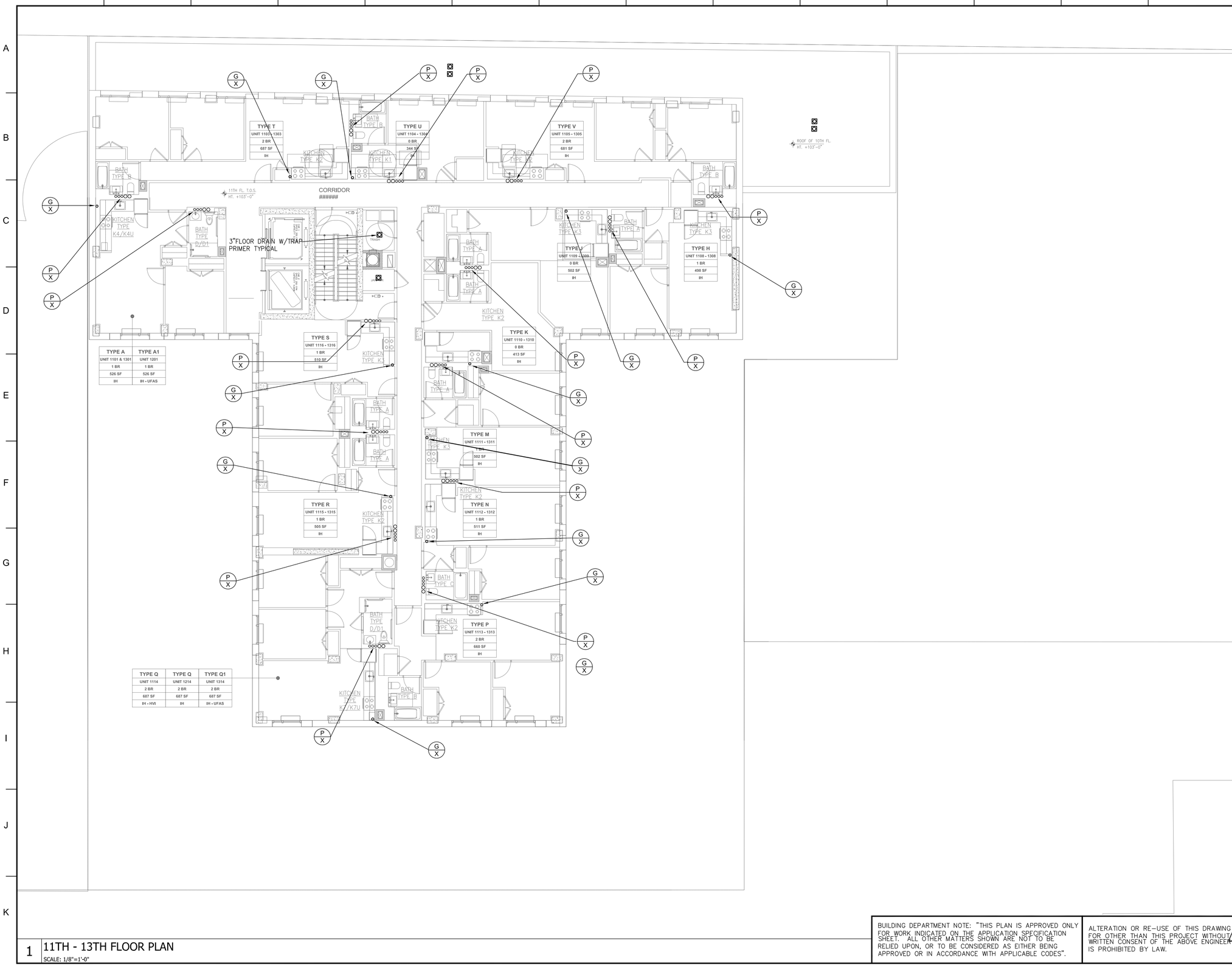

1 11TH - 13TH FLOOR PLAN

SCALE: 1/8"=1'-0"

BUILDING DEPARTMENT NOTE: "THIS PLAN IS APPROVED ONLY FOR WORK INDICATED ON THE APPLICATION SPECIFICATION SHEET. ALL OTHER MATTERS SHOWN ARE NOT TO BE RELIED UPON, OR TO BE CONSIDERED AS EITHER BEING APPROVED OR IN ACCORDANCE WITH APPLICABLE CODES".

ALTERATION OR RE-USE OF THIS DRAWING FOR OTHER THAN THIS PROJECT WITHOUT WRITTEN CONSENT OF THE ABOVE ENGINEER IS PROHIBITED BY LAW.

Client:

RANGER PROPERTIES
4790 BROADWAY
NEW YORK, NY 10034

Architect:

FOGARTY FINGER
architecture | interiors

69 Walker St, New York, NY 10013
t 212 966 7450 f 212 966 7444

Library Architect:

Andrew Berman Architect, PLLC
77 Chambers Street, 4th Floor
New York, NY 10007
Tel 212.226.5998

Structural:

Thornton Tomasetti
51 Madison Avenue
New York, NY 10010
Tel 917.661.7800

MEP / FP:

Concessi Engineering, PC
499 7th Avenue, 11th Floor South Tower
New York, NY 10018
Tel 212.629.6810

FACADE:

SIMPSON GUMPERTZ & HEGER
550 7th Avenue, 10th Floor
New York, NY 10018
Tel 212.271.7000

CODE:

METROPOLIS
22 Courtland Street, 10th Floor
New York, NY 10007
Tel 212.233.6344

No.	Date	Issue
1	02/06/19	ISSUED FOR FILING / DD ESTIMATING

Project:

4790 BROADWAY
NEW YORK, NY 10034

Drawing Title:

PLUMBING
11TH THRU 13TH
FLOOR PLAN

Seal & Signature:

STATE OF NEW YORK
ROBERT V. CONCESSI
No. 086705
LICENSED PROFESSIONAL ENGINEER

DATE (MM-DD-YY): 11-02-2018
PROJECT No.: 7815.00
DRAWING BY: DP
CHK BY: JV/RC
DWG. No.: P-307.00
CADD FILE No.: –
10 OF 21

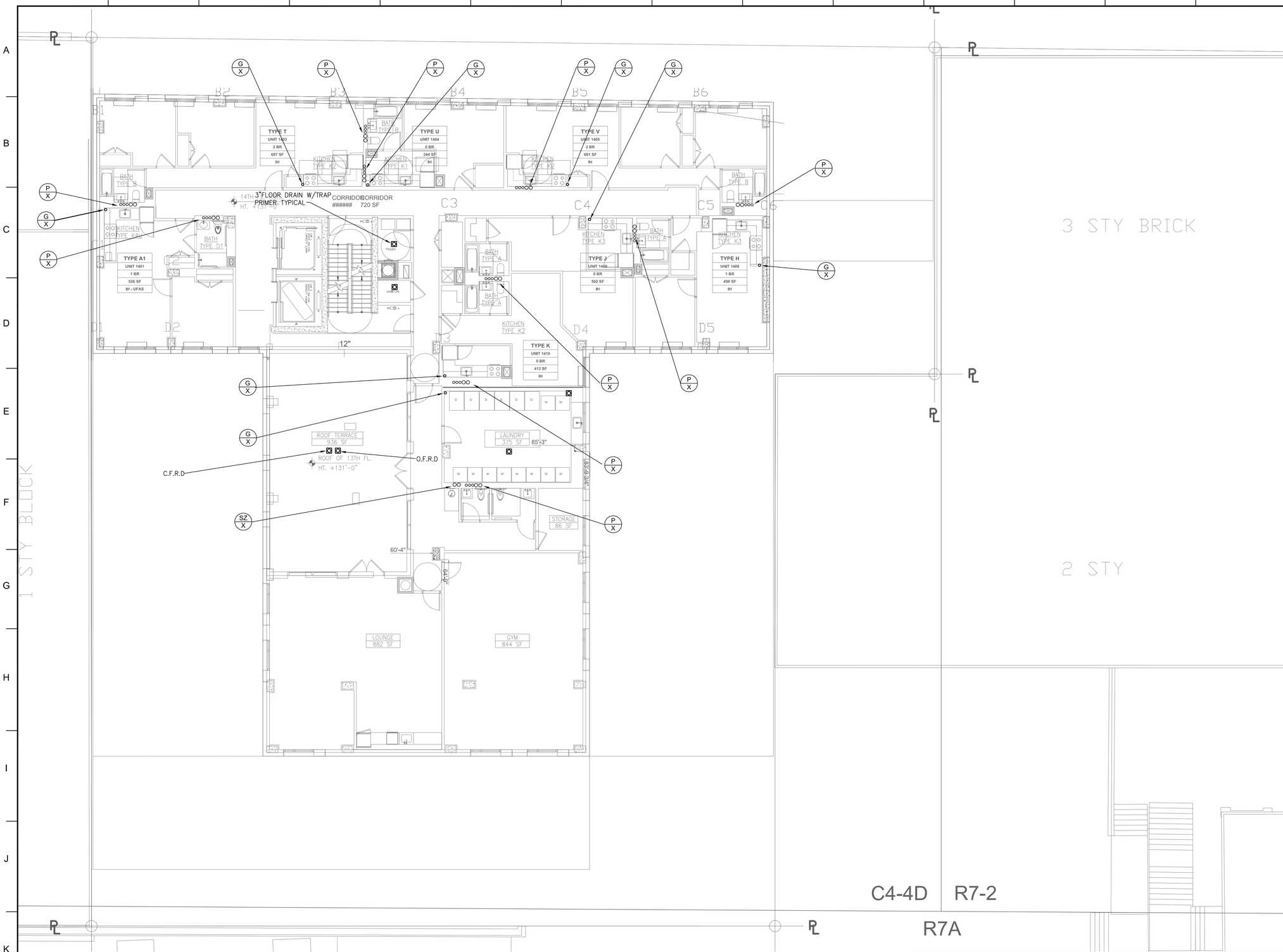

1 14TH FLOOR PLAN
SCALE: 1/8"=1'-0"

BUILDING DEPARTMENT NOTE: "THIS PLAN IS APPROVED ONLY FOR WORK INDICATED ON THE APPLICATION SPECIFICATION SHEET. ALL OTHER MATTERS SHOWN ARE NOT TO BE RELIED UPON, OR TO BE CONSIDERED AS EITHER BEING APPROVED OR IN ACCORDANCE WITH APPLICABLE CODES".

ALTERATION OR RE-USE OF THIS DRAWING FOR OTHER THAN THIS PROJECT WITHOUT WRITTEN CONSENT OF THE ABOVE ENGINEER IS PROHIBITED BY LAW.

Client:

RANGER PROPERTIES
4790 BROADWAY
NEW YORK, NY 10034

Architect:

FOGARTY FINGER
architecture | interiors

69 Walker St, New York, NY 10013
t 212 966 7450 f 212 966 7444

Library Architect:

Andrew Berman Architect, PLLC
77 Chambers Street, 4th Floor
New York, NY 10007
Tel 212.226.5998

Structural:

Thornton Tomasetti
51 Madison Avenue
New York, NY 10010
Tel 917.661.7800

MEP / FP:

Concessi Engineering, PC
499 7th Avenue, 11th Floor South Tower
New York, NY 10018
Tel 212.629.6810

FACADE:

SIMPSON GUMPERTZ & HEGER
550 7th Avenue, 10th Floor
New York, NY 10018
Tel 212.271.7000

CODE:

METROPOLIS
22 Courtland Street, 10th Floor
New York, NY 10007
Tel 212.233.6344

No.	Date	Issue
1	02/06/19	ISSUED FOR FILING / DD ESTIMATING

Project:

4790 BROADWAY
NEW YORK, NY 10034

Drawing Title:

PLUMBING
14TH FLOOR PLAN

Seal & Signature:

STATE OF NEW YORK · ROBERT L. CONCESSI · No. 86705 · LICENSED PROFESSIONAL ENGINEER

DATE (MM-DD-YY): 11-02-2018
PROJECT No.: 7815.00
DRAWING BY: DP
CHK BY: JV/RC
DWG. No.: P-308.00
CADD FILE No.: –

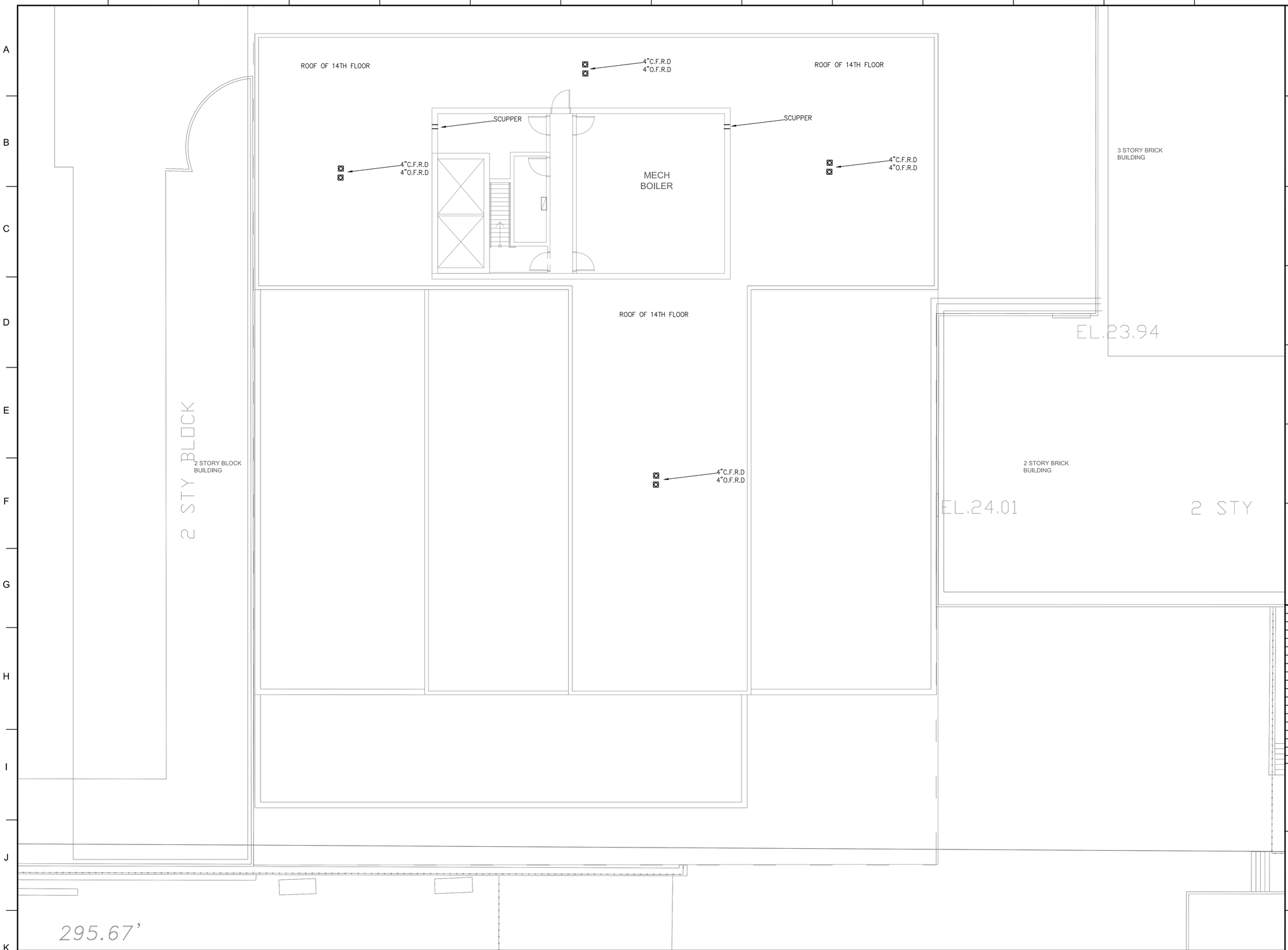

1 BULKHEAD PLAN
SCALE: 1/8"=1'-0"

BUILDING DEPARTMENT NOTE: "THIS PLAN IS APPROVED ONLY FOR WORK INDICATED ON THE APPLICATION SPECIFICATION SHEET. ALL OTHER MATTERS SHOWN ARE NOT TO BE RELIED UPON, OR TO BE CONSIDERED AS EITHER BEING APPROVED OR IN ACCORDANCE WITH APPLICABLE CODES".

ALTERATION OR RE-USE OF THIS DRAWING FOR OTHER THAN THIS PROJECT WITHOUT WRITTEN CONSENT OF THE ABOVE ENGINEER IS PROHIBITED BY LAW.

Client:

RANGER PROPERTIES
4790 BROADWAY
NEW YORK, NY 10034

Architect:

FOGARTY FINGER
architecture | interiors
69 Walker St, New York, NY 10013
t 212 966 7450 f 212 966 7444

Library Architect:

Andrew Berman Architect, PLLC
77 Chambers Street, 4th Floor
New York, NY 10007
Tel 212.226.5998

Structural:

Thornton Tomasetti
51 Madison Avenue
New York, NY 10010
Tel 917.661.7800

MEP / FP:

Concessi Engineering, PC
499 7th Avenue, 11th Floor South Tower
New York, NY 10018
Tel 212.629.6810

FACADE:

SIMPSON GUMPERTZ & HEGER
550 7th Avenue, 10th Floor
New York, NY 10018
Tel 212.271.7000

CODE:

METROPOLIS
22 Courtland Street, 10th Floor
New York, NY 10007
Tel 212.233.6344

No.	Date	Issue
1	02/06/19	ISSUED FOR FILING / DD ESTIMATING

Project:

4790 BROADWAY
NEW YORK, NY 10034

Drawing Title:

PLUMBING
BULKHEAD PLAN

Seal & Signature:

STATE OF NEW YORK · ROBERT V. CONCESSI · No. 86705 · LICENSED PROFESSIONAL ENGINEER

DATE (MM-DD-YY): 11-02-2018
PROJECT No.: 7815.00
DRAWING BY: DP
CHK BY: JV/RC
DWG. No.: P-309.00
CADD FILE No.: –

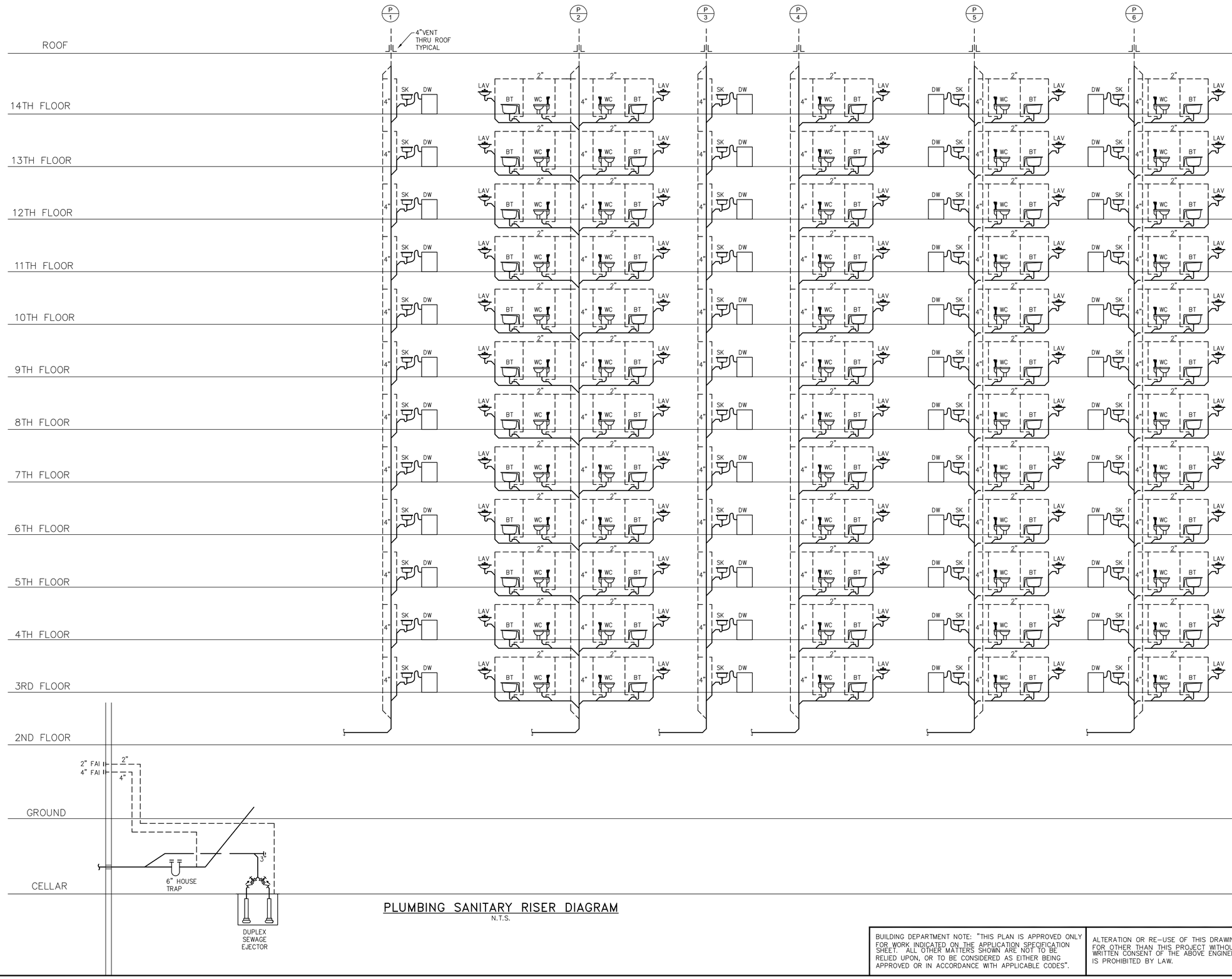

PLUMBING SANITARY RISER DIAGRAM
N.T.S.

BUILDING DEPARTMENT NOTE: "THIS PLAN IS APPROVED ONLY FOR WORK INDICATED ON THE APPLICATION SPECIFICATION SHEET. ALL OTHER MATTERS SHOWN ARE NOT TO BE RELIED UPON, OR TO BE CONSIDERED AS EITHER BEING APPROVED OR IN ACCORDANCE WITH APPLICABLE CODES".

ALTERATION OR RE-USE OF THIS DRAWING FOR OTHER THAN THIS PROJECT WITHOUT WRITTEN CONSENT OF THE ABOVE ENGINEER IS PROHIBITED BY LAW.

Client:

RANGER PROPERTIES
4790 BROADWAY
NEW YORK, NY 10034

Architect:

FOGARTY FINGER
architecture | interiors

69 Walker St, New York, NY 10013
t 212 966 7450 f 212 966 7444

Library Architect:

Andrew Berman Architect, PLLC
77 Chambers Street, 4th Floor
New York, NY 10007
Tel 212.226.5998

Structural:

Thornton Tomasetti
51 Madison Avenue
New York, NY 10010
Tel 917.661.7800

MEP / FP:

Concessi Engineering, PC
499 7th Avenue, 11th Floor South Tower
New York, NY 10018
Tel 212.629.6810

FACADE:

SIMPSON GUMPERTZ & HEGER
550 7th Avenue, 10th Floor
New York, NY 10018
Tel 212.271.7000

CODE:

METROPOLIS
22 Courtland Street, 10th Floor
New York, NY 10007
Tel 212.233.6344

No.	Date	Issue
1	02/06/19	ISSUED FOR FILING / DD ESTIMATING

Project:

4790 BROADWAY
NEW YORK, NY 10034

Drawing Title:

PLUMBING
SANITARY RISER DIAGRAM
SHEET #1 OF 3

Seal & Signature:

STATE OF NEW YORK · ROBERT J. CONCESSI · No. 86705 · LICENSED PROFESSIONAL ENGINEER

DATE (MM-DD-YY):	11-02-2018
PROJECT No.:	7815.00
DRAWING BY:	DP
CHK BY:	JV/RC
DWG. No.:	P-401.00
CADD FILE No.:	–
	13 OF 21

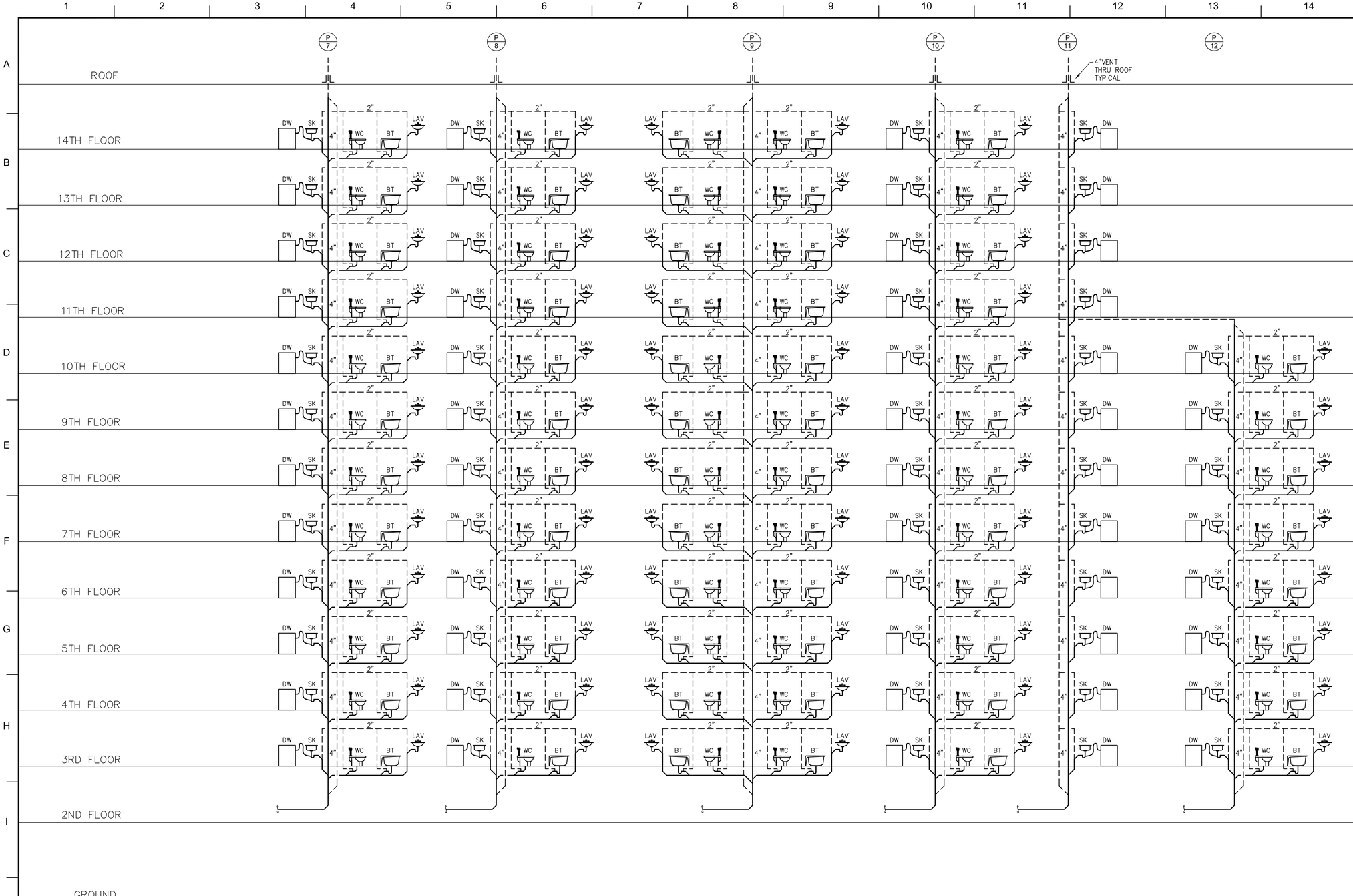

PLUMBING SANITARY RISER DIAGRAM

N.T.S.

BUILDING DEPARTMENT NOTE: "THIS PLAN IS APPROVED ONLY FOR WORK INDICATED ON THE APPLICATION SPECIFICATION SHEET. ALL OTHER MATTERS SHOWN ARE NOT TO BE RELIED UPON, OR TO BE CONSIDERED AS EITHER BEING APPROVED OR IN ACCORDANCE WITH APPLICABLE CODES".

ALTERATION OR RE-USE OF THIS DRAWING FOR OTHER THAN THIS PROJECT WITHOUT WRITTEN CONSENT OF THE ABOVE ENGINEER IS PROHIBITED BY LAW.

Client:

RANGER PROPERTIES
4790 BROADWAY
NEW YORK, NY 10034

Architect:

FOGARTY FINGER
architecture | interiors

69 Walker St, New York, NY 10013
t 212 966 7450 f 212 966 7444

Library Architect:

Andrew Berman Architect, PLLC
77 Chambers Street, 4th Floor
New York, NY 10007
Tel 212.226.5998

Structural:

Thornton Tomasetti
51 Madison Avenue
New York, NY 10010
Tel 917.661.7800

MEP / FP:

Concessi Engineering, PC
499 7th Avenue, 11th Floor South Tower
New York, NY 10018
Tel 212.629.6810

FACADE:

SIMPSON GUMPERTZ & HEGER
550 7th Avenue, 10th Floor
New York, NY 10018
Tel 212.271.7000

CODE:

METROPOLIS
22 Courtland Street, 10th Floor
New York, NY 10007
Tel 212.233.6344

No.	Date	Issue
1	02/06/19	ISSUED FOR FILING / DD ESTIMATING

Project:

4790 BROADWAY
NEW YORK, NY 10034

Drawing Title:

PLUMBING
SANITARY RISER DIAGRAM
SHEET #2 OF 2

Seal & Signature:

STATE OF NEW YORK · ROBERT J. CONCESSI · LICENSED PROFESSIONAL ENGINEER · No. 86705

DATE (MM-DD-YY):	11-02-2018
PROJECT No.:	7815.00
DRAWING BY:	DP
CHK BY:	JV/RC
DWG. No.:	P-402.00
CADD FILE No.:	–

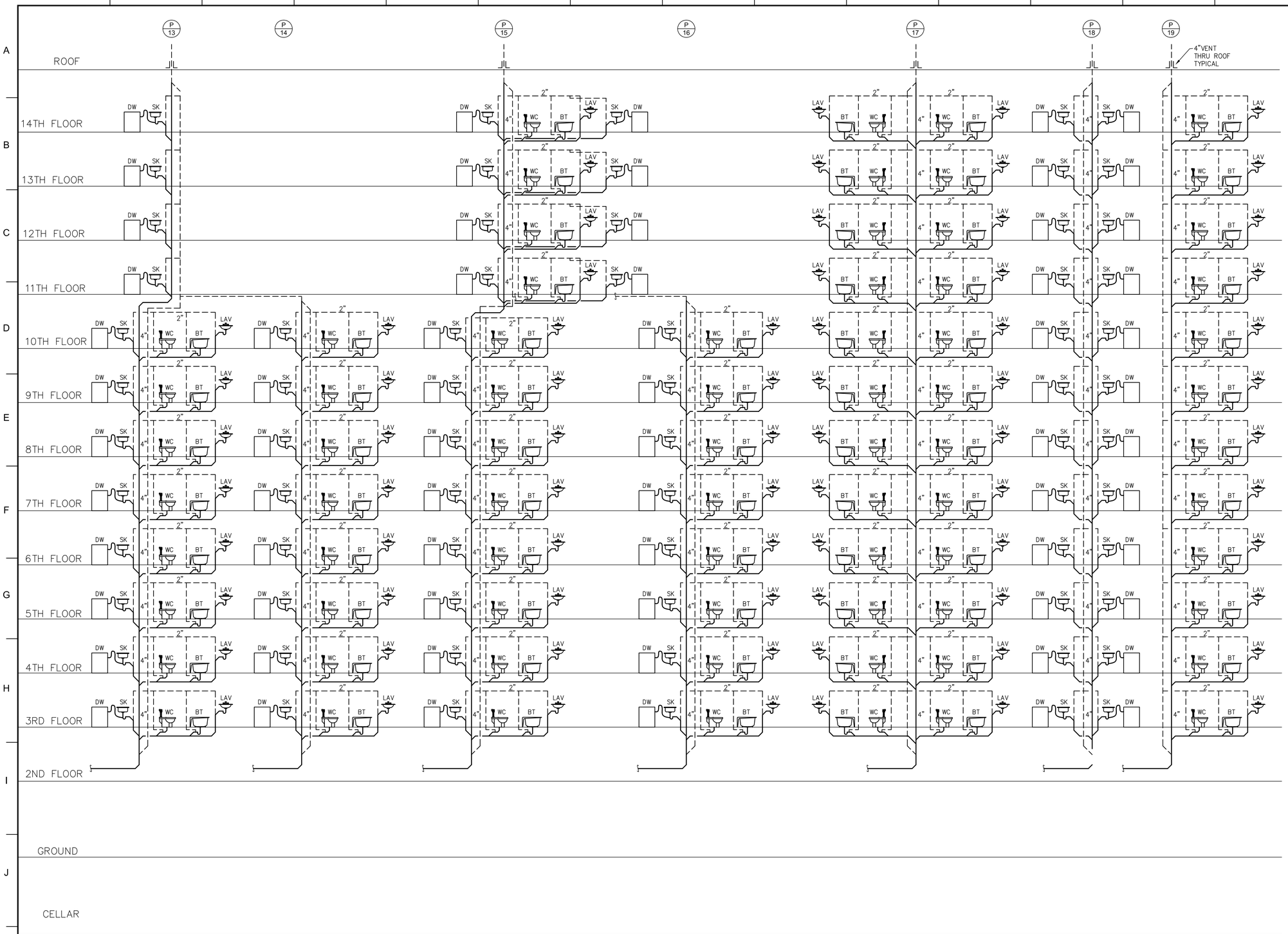

PLUMBING SANITARY RISER DIAGRAM

N.T.S.

BUILDING DEPARTMENT NOTE: "THIS PLAN IS APPROVED ONLY FOR WORK INDICATED ON THE APPLICATION SPECIFICATION SHEET. ALL OTHER MATTERS SHOWN ARE NOT TO BE RELIED UPON, OR TO BE CONSIDERED AS EITHER BEING APPROVED OR IN ACCORDANCE WITH APPLICABLE CODES".

ALTERATION OR RE-USE OF THIS DRAWING FOR OTHER THAN THIS PROJECT WITHOUT WRITTEN CONSENT OF THE ABOVE ENGINEER IS PROHIBITED BY LAW.

Client:

RANGER PROPERTIES
4790 BROADWAY
NEW YORK, NY 10034

Architect:

FOGARTY FINGER architecture | interiors
69 Walker St, New York, NY 10013
t 212 966 7450 f 212 966 7444

Library Architect:

Andrew Berman Architect, PLLC
77 Chambers Street, 4th Floor
New York, NY 10007
Tel 212.226.5998

Structural:

Thornton Tomasetti
51 Madison Avenue
New York, NY 10010
Tel 917.661.7800

MEP / FP:

Concessi Engineering, PC
499 7th Avenue, 11th Floor South Tower
New York, NY 10018
Tel 212.629.6810

FACADE:

SIMPSON GUMPERTZ & HEGER
550 7th Avenue, 10th Floor
New York, NY 10018
Tel 212.271.7000

CODE:

METROPOLIS
22 Courtland Street, 10th Floor
New York, NY 10007
Tel 212.233.6344

No.	Date	Issue
1	02/06/19	ISSUED FOR FILING / DD ESTIMATING

Project:

4790 BROADWAY
NEW YORK, NY 10034

Drawing Title:

PLUMBING
SANITARY RISER DIAGRAM
SHEET #3 OF 3

Seal & Signature:

STATE OF NEW YORK · ROBERT L. CONCESSI · No. 86705 · LICENSED PROFESSIONAL ENGINEER

DATE (MM-DD-YY):	11-02-2018
PROJECT No.:	7815.00
DRAWING BY:	DP
CHK BY:	JV/RC
DWG. No.:	P-403.00
CADD FILE No.:	–

15 OF 21

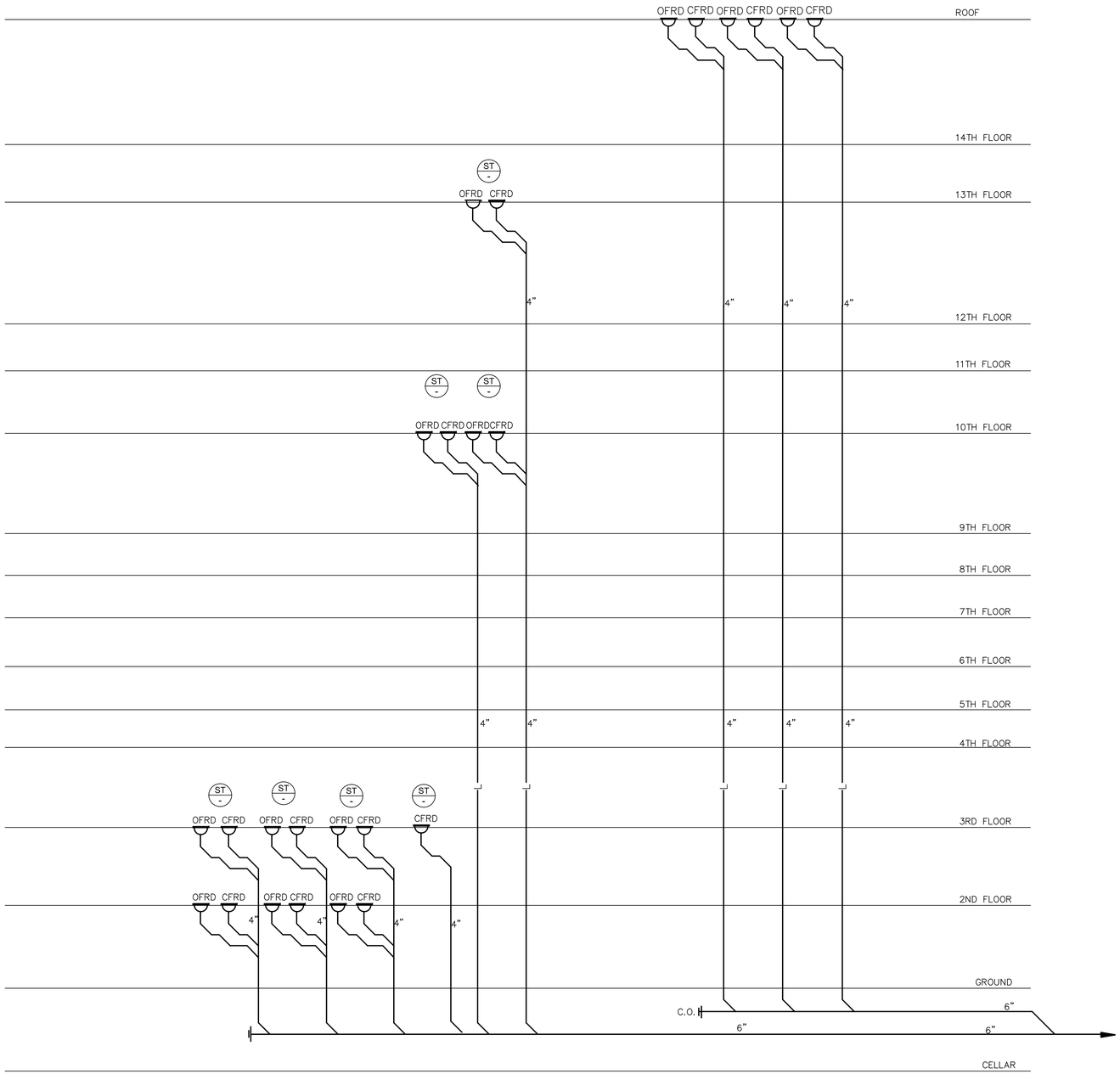

PLUMBING STORM WATER RISER DIAGRAM

N.T.S.

BUILDING DEPARTMENT NOTE: "THIS PLAN IS APPROVED ONLY FOR WORK INDICATED ON THE APPLICATION SPECIFICATION SHEET. ALL OTHER MATTERS SHOWN ARE NOT TO BE RELIED UPON, OR TO BE CONSIDERED AS EITHER BEING APPROVED OR IN ACCORDANCE WITH APPLICABLE CODES".

ALTERATION OR RE-USE OF THIS DRAWING FOR OTHER THAN THIS PROJECT WITHOUT WRITTEN CONSENT OF THE ABOVE ENGINEER IS PROHIBITED BY LAW.

Client:

RANGER PROPERTIES
4790 BROADWAY
NEW YORK, NY 10034

Architect:

FOGARTY FINGER
architecture | interiors
69 Walker St, New York, NY 10013
t 212 966 7450 f 212 966 7444

Library Architect:

Andrew Berman Architect, PLLC
77 Chambers Street, 4th Floor
New York, NY 10007
Tel 212.226.5998

Structural:

Thornton Tomasetti
51 Madison Avenue
New York, NY 10010
Tel 917.661.7800

MEP / FP:

Concessi Engineering, PC
499 7th Avenue, 11th Floor South Tower
New York, NY 10018
Tel 212.629.6810

FACADE:

SIMPSON GUMPERTZ & HEGER
550 7th Avenue, 10th Floor
New York, NY 10018
Tel 212.271.7000

CODE:

METROPOLIS
22 Courtland Street, 10th Floor
New York, NY 10007
Tel 212.233.6344

No.	Date	Issue
1	02/06/19	ISSUED FOR FILING / DD ESTIMATING

Project:

4790 BROADWAY
NEW YORK, NY 10034

Drawing Title:

PLUMBING
STORM WATER
RISER DIAGRAM

Seal & Signature:

STATE OF NEW YORK · ROBERT J. CONCESSI · No. 085705 · LICENSED PROFESSIONAL ENGINEER

DATE (MM-DD-YY):	11-02-2018
PROJECT No.:	7815.00
DRAWING BY:	DP
CHK BY:	JV/RC
DWG. No.:	P-404.00
CADD FILE No.:	–

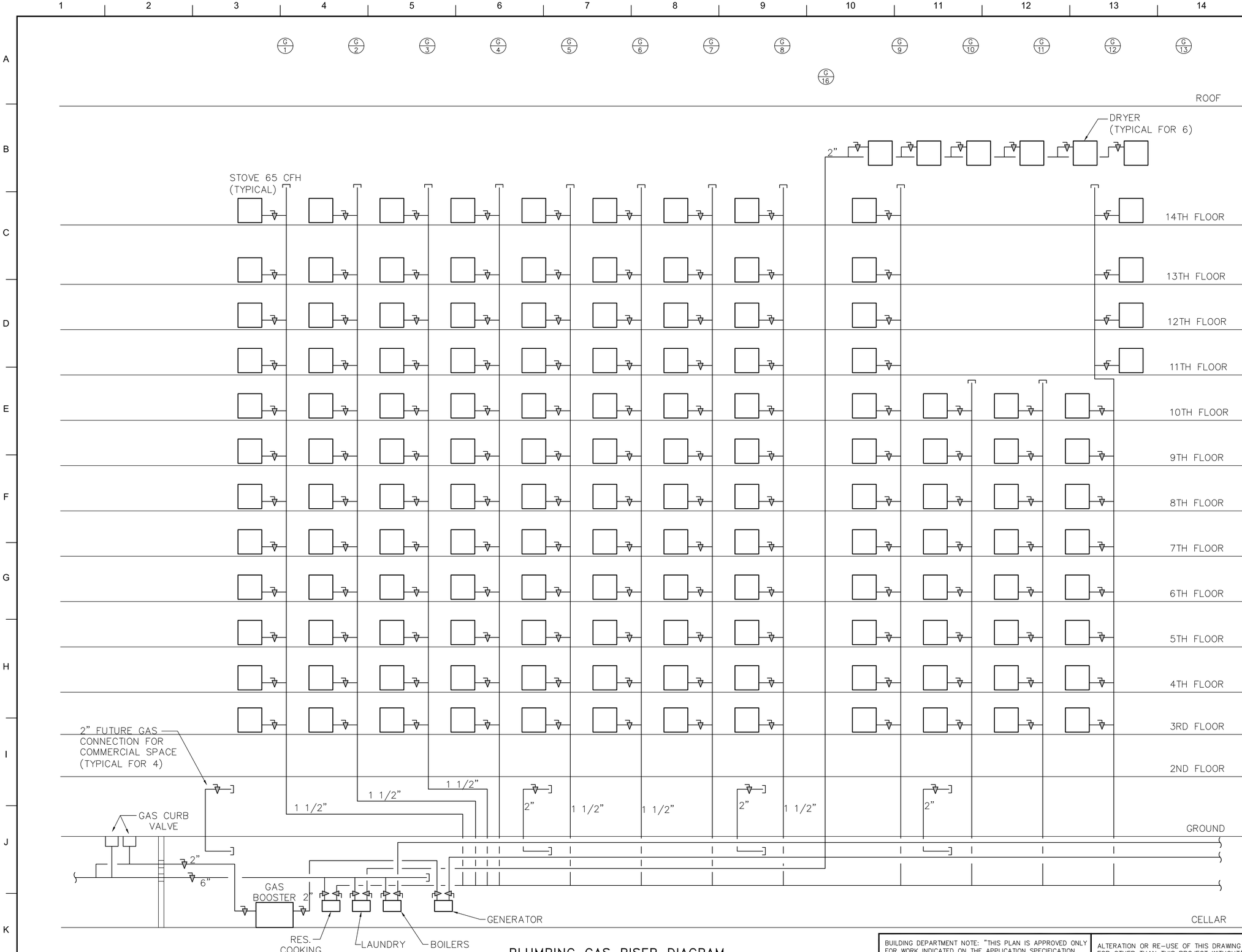

PLUMBING GAS RISER DIAGRAM

N.T.S.

BUILDING DEPARTMENT NOTE: "THIS PLAN IS APPROVED ONLY FOR WORK INDICATED ON THE APPLICATION SPECIFICATION SHEET. ALL OTHER MATTERS SHOWN ARE NOT TO BE RELIED UPON, OR TO BE CONSIDERED AS EITHER BEING APPROVED OR IN ACCORDANCE WITH APPLICABLE CODES".

ALTERATION OR RE-USE OF THIS DRAWING FOR OTHER THAN THIS PROJECT WITHOUT WRITTEN CONSENT OF THE ABOVE ENGINEER IS PROHIBITED BY LAW.

Client:

RANGER PROPERTIES
4790 BROADWAY
NEW YORK, NY 10034

Architect:

FOGARTY FINGER
architecture | interiors
69 Walker St, New York, NY 10013
t 212 966 7450 f 212 966 7444

Library Architect:

Andrew Berman Architect, PLLC
77 Chambers Street, 4th Floor
New York, NY 10007
Tel 212.226.5998

Structural:

Thornton Tomasetti
51 Madison Avenue
New York, NY 10010
Tel 917.661.7800

MEP / FP:

Concessi Engineering, PC
499 7th Avenue, 11th Floor South Tower
New York, NY 10018
Tel 212.629.6810

FACADE:

SIMPSON GUMPERTZ & HEGER
550 7th Avenue, 10th Floor
New York, NY 10018
Tel 212.271.7000

CODE:

METROPOLIS
22 Courtland Street, 10th Floor
New York, NY 10007
Tel 212.233.6344

No.	Date	Issue
1	02/06/19	ISSUED FOR FILING / DD ESTIMATING

Project:

4790 BROADWAY
NEW YORK, NY 10034

Drawing Title:

PLUMBING
GAS RISER DIAGRAM
SHEET #1 OF 2

Seal & Signature:

STATE OF NEW YORK · ROBERT J. CONCESSI · No. 086705 · LICENSED PROFESSIONAL ENGINEER

DATE (MM-DD-YY):	11-02-2018
PROJECT No.:	7815.00
DRAWING BY:	DP
CHK BY:	JV/RC
DWG. No.:	P-405.00
CADD FILE No.:	–

17 OF 21

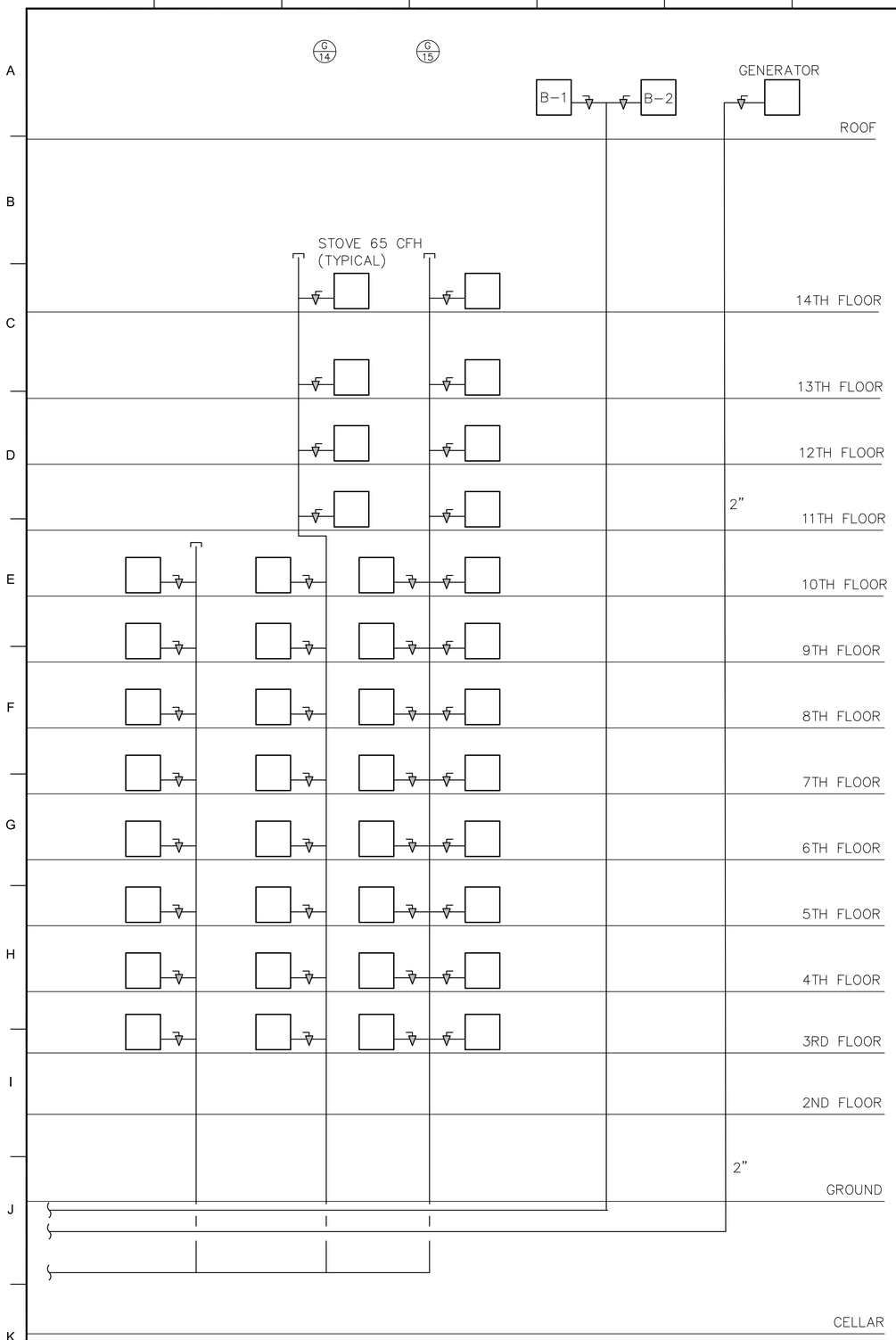

PLUMBING GAS RISER DIAGRAM

N.T.S.

BUILDING DEPARTMENT NOTE: "THIS PLAN IS APPROVED ONLY FOR WORK INDICATED ON THE APPLICATION SPECIFICATION SHEET. ALL OTHER MATTERS SHOWN ARE NOT TO BE RELIED UPON, OR TO BE CONSIDERED AS EITHER BEING APPROVED OR IN ACCORDANCE WITH APPLICABLE CODES".

ALTERATION OR RE-USE OF THIS DRAWING FOR OTHER THAN THIS PROJECT WITHOUT WRITTEN CONSENT OF THE ABOVE ENGINEER IS PROHIBITED BY LAW.

Client:

RANGER PROPERTIES
4790 BROADWAY
NEW YORK, NY 10034

Architect:

FOGARTY FINGER
architecture | interiors

69 Walker St, New York, NY 10013
t 212 966 7450 f 212 966 7444

Library Architect:

Andrew Berman Architect, PLLC
77 Chambers Street, 4th Floor
New York, NY 10007
Tel 212.226.5998

Structural:

Thornton Tomasetti
51 Madison Avenue
New York, NY 10010
Tel 917.661.7800

MEP / FP:

Concessi Engineering, PC
499 7th Avenue, 11th Floor South Tower
New York, NY 10018
Tel 212.629.6810

FACADE:

SIMPSON GUMPERTZ & HEGER
550 7th Avenue, 10th Floor
New York, NY 10018
Tel 212.271.7000

CODE:

METROPOLIS
22 Courtland Street, 10th Floor
New York, NY 10007
Tel 212.233.6344

No.	Date	Issue
1	02/06/19	ISSUED FOR FILING / DD ESTIMATING

Project:

4790 BROADWAY
NEW YORK, NY 10034

Drawing Title:

PLUMBING
GAS RISER DIAGRAM
SHEET #2 OF 2

Seal & Signature:

STATE OF NEW YORK · ROBERT J. CONCESSI · No. 086705 · LICENSED PROFESSIONAL ENGINEER

DATE (MM-DD-YY): 11-02-2018
PROJECT No.: 7815.00
DRAWING BY: DP
CHK BY: JV/RC
DWG. No.: P-406.00
CADD FILE No.: –

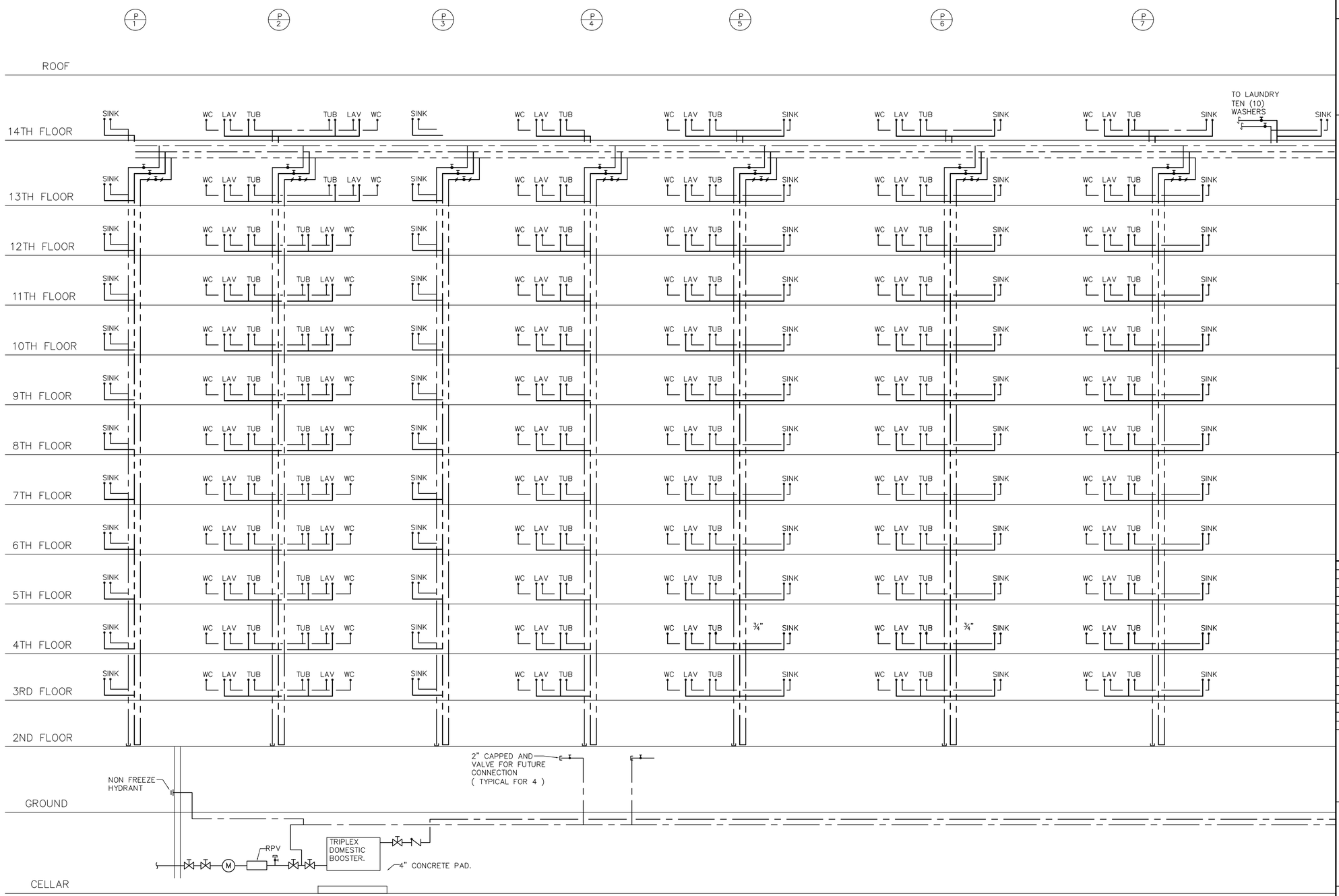

PLUMBING WATER RISER DIAGRAM

N.T.S.

BUILDING DEPARTMENT NOTE: "THIS PLAN IS APPROVED ONLY FOR WORK INDICATED ON THE APPLICATION SPECIFICATION SHEET. ALL OTHER MATTERS SHOWN ARE NOT TO BE RELIED UPON, OR TO BE CONSIDERED AS EITHER BEING APPROVED OR IN ACCORDANCE WITH APPLICABLE CODES".

ALTERATION OR RE-USE OF THIS DRAWING FOR OTHER THAN THIS PROJECT WITHOUT WRITTEN CONSENT OF THE ABOVE ENGINEER IS PROHIBITED BY LAW.

Client:

RANGER PROPERTIES
4790 BROADWAY
NEW YORK, NY 10034

Architect:

FOGARTY FINGER
architecture | interiors

69 Walker St, New York, NY 10013
t 212 966 7450 f 212 966 7444

Library Architect:

Andrew Berman Architect, PLLC
77 Chambers Street, 4th Floor
New York, NY 10007
Tel 212.226.5998

Structural:

Thornton Tomasetti
51 Madison Avenue
New York, NY 10010
Tel 917.661.7800

MEP / FP:

Concessi Engineering, PC
499 7th Avenue, 11th Floor South Tower
New York, NY 10018
Tel 212.629.6810

FACADE:

SIMPSON GUMPERTZ & HEGER
550 7th Avenue, 10th Floor
New York, NY 10018
Tel 212.271.7000

CODE:

METROPOLIS
22 Courtland Street, 10th Floor
New York, NY 10007
Tel 212.233.6344

No.	Date	Issue
1	02/06/19	ISSUED FOR FILING / DD ESTIMATING

Project:

4790 BROADWAY
NEW YORK, NY 10034

Drawing Title:

PLUMBING
WATER RISER DIAGRAM
SHEET #1 OF 3

Seal & Signature:

STATE OF NEW YORK · ROBERT V. CONCESSI · No. 86705 · LICENSED PROFESSIONAL ENGINEER

DATE (MM-DD-YY):	11-02-2018
PROJECT No.:	7815.00
DRAWING BY:	DP
CHK BY:	JV/RC
DWG. No.:	P-407.00
CADD FILE No.:	–

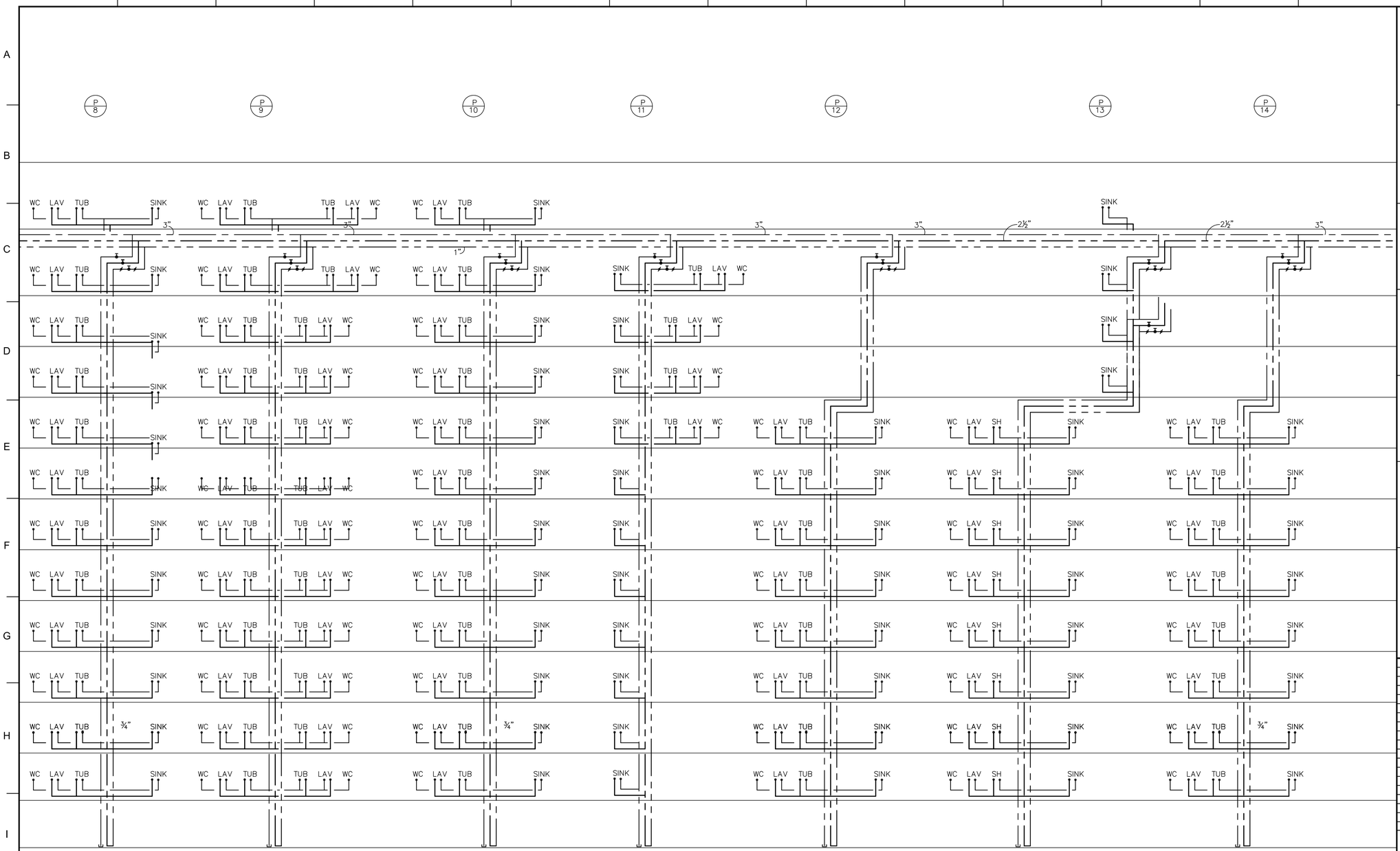

PLUMBING WATER RISER DIAGRAM

N.T.S.

BUILDING DEPARTMENT NOTE: "THIS PLAN IS APPROVED ONLY FOR WORK INDICATED ON THE APPLICATION SPECIFICATION SHEET. ALL OTHER MATTERS SHOWN ARE NOT TO BE RELIED UPON, OR TO BE CONSIDERED AS EITHER BEING APPROVED OR IN ACCORDANCE WITH APPLICABLE CODES".

ALTERATION OR RE-USE OF THIS DRAWING FOR OTHER THAN THIS PROJECT WITHOUT WRITTEN CONSENT OF THE ABOVE ENGINEER IS PROHIBITED BY LAW.

Client:

RANGER PROPERTIES
4790 BROADWAY
NEW YORK, NY 10034

Architect:

FOGARTY FINGER
architecture | interiors

69 Walker St, New York, NY 10013
t 212 966 7450 f 212 966 7444

Library Architect:

Andrew Berman Architect, PLLC
77 Chambers Street, 4th Floor
New York, NY 10007
Tel 212.226.5998

Structural:

Thornton Tomasetti
51 Madison Avenue
New York, NY 10010
Tel 917.661.7800

MEP / FP:

Concessi Engineering, PC
499 7th Avenue, 11th Floor South Tower
New York, NY 10018
Tel 212.629.6810

FACADE:

SIMPSON GUMPERTZ & HEGER
550 7th Avenue, 10th Floor
New York, NY 10018
Tel 212.271.7000

CODE:

METROPOLIS
22 Courtland Street, 10th Floor
New York, NY 10007
Tel 212.233.6344

No.	Date	Issue
1	02/06/19	ISSUED FOR FILING / DD ESTIMATING

Project:

4790 BROADWAY
NEW YORK, NY 10034

Drawing Title:

PLUMBING
WATER RISER DIAGRAM
SHEET #2 OF 3

Seal & Signature:

STATE OF NEW YORK · ROBERT L. CONCESSI · No. 86705 · LICENSED PROFESSIONAL ENGINEER

DATE (MM-DD-YY):	11-02-2018
PROJECT No.:	7815.00
DRAWING BY:	DP
CHK. BY:	JV/RC
DWG. No.:	P-408.00
CADD FILE No.:	–

PLUMBING WATER RISER DIAGRAM

N.T.S.

BUILDING DEPARTMENT NOTE: "THIS PLAN IS APPROVED ONLY FOR WORK INDICATED ON THE APPLICATION SPECIFICATION SHEET. ALL OTHER MATTERS SHOWN ARE NOT TO BE RELIED UPON, OR TO BE CONSIDERED AS EITHER BEING APPROVED OR IN ACCORDANCE WITH APPLICABLE CODES".

ALTERATION OR RE-USE OF THIS DRAWING FOR OTHER THAN THIS PROJECT WITHOUT WRITTEN CONSENT OF THE ABOVE ENGINEER IS PROHIBITED BY LAW.

Client:

RANGER PROPERTIES
4790 BROADWAY
NEW YORK, NY 10034

Architect:

FOGARTY FINGER
architecture | interiors

69 Walker St, New York, NY 10013
t 212 966 7450 f 212 966 7444

Library Architect:

Andrew Berman Architect, PLLC
77 Chambers Street, 4th Floor
New York, NY 10007
Tel 212.226.5998

Structural:

Thornton Tomasetti
51 Madison Avenue
New York, NY 10010
Tel 917.661.7800

MEP / FP:

Concessi Engineering, PC
499 7th Avenue, 11th Floor South Tower
New York, NY 10018
Tel 212.629.6810

FACADE:

SIMPSON GUMPERTZ & HEGER
550 7th Avenue, 10th Floor
New York, NY 10018
Tel 212.271.7000

CODE:

METROPOLIS
22 Courtland Street, 10th Floor
New York, NY 10007
Tel 212.233.6344

No.	Date	Issue
1	02/06/19	ISSUED FOR FILING / DD ESTIMATING

Project:

4790 BROADWAY
NEW YORK, NY 10034

Drawing Title:

PLUMBING
WATER RISER DIAGRAM
SHEET #3 OF 3

Seal & Signature:

STATE OF NEW YORK · ROBERT L. CONDON · No. 86705 · LICENSED PROFESSIONAL ENGINEER

DATE (MM-DD-YY):	11-02-2018
PROJECT No.:	7815.00
DRAWING BY:	DP
CHK. BY:	JV/RC
DWG. No.:	P-409.00
CADD FILE No.:	–

21 OF 21

N.Y.C. DEPARTMENT OF BUILDINGS SPRINKLER NOTES:

1. AUTOMATIC SPRINKLER SYSTEM SHALL COMPLY WITH SEC. 903 & APPENDIX Q OF NYC BUILDING CODE & NFPA 13–2007.
2. CONSTRUCTION DOCUMENTS FOR STANDPIPE SYSTEM SHALL CONTAIN PLANS THAT INCLUDE THE INFORMATION AND DATA LISTED IN SEC. 905 OF NYC BUILDING CODE.
3. APPROVED AUTOMATIC SPRINKLER SYSTEM IN NEW BUILDINGS AND STRUCTURES SHALL BE PROVIDED IN THE LOCATIONS DESCRIBED IN SEC. 903.2 OF NYC BUILDING CODE.
4. AUTOMATIC SPRINKLER SYSTEM SHALL BE DESIGNED AND INSTALLED IN ACCORDANCE WITH SEC. 903.2.1 THROUGH 903.5 OF NYC BUILDING CODE.
5. WHERE THE PROVISIONS OF THE NYC BUILDING CODE REQUIRED THAT A BUILDING OR PORTION THERE OF BE EQUIPPED THROUGHOUT WITH AN AUTOMATIC SPRINKLER SYSTEM IN ACCORDANCE WITH SEC. 903.3.1.1, SPRINKLERS SHALL BE INSTALLED THROUGHOUT IN ACCORDANCE WITH NFPA 13–13 AS MODIFIED IN APPENDIX Q EXCEPT AS PROVIDED IN SEC. 903.3.1.1.1 OF NYC BUILDING CODE.
6. AUTOMATIC SPRINKLERS SHALL NOT BE REQUIRED IN THE ROOMS OR AREAS WHICH ARE LISTED IN 903.3.1.1.1 OF NYC BUILDING CODE AS LONG AS AN APPROVED AUTOMATIC FIRE DETECTION SYSTEM IN ACCORDANCE WITH SEC. 907.2 AND AN ALTERNATIVE EXTINGUISHING SYSTEM IN ACCORDANCE WITH SEC. 904.
7. SPRINKLERS SHALL NOT BE OMITTED FROM ANY ROOM MERELY BECAUSE IT IS DAMP, OF FIRE–RESISTANCE–RATED CONSTRUCTION OR CONTAINS ELECTRIC EQUIPMENT AS PER SEC. 903.3.1.1.1 OF THE NYC BUILDING CODE.
8. WHERE ALLOWED IN BUILDINGS OF GROUP R, UP TO AN INCLUDING SIX STORIES IN HEIGHT, AUTOMATIC SPRINKLER SYSTEM SHALL BE INSTALLED THROUGH IN ACCORDANCE WITH NFPA 13R AS MODIFIED IN APPENDIX Q OF NYC BUILDING CODE AS PER SEC. 903.3.1.2.
9. WHERE AUTOMATIC SPRINKLER SYSTEM ARE REQUIRED BY NYC BUILDING CODE, QUICK–RESPONSE AUTOMATIC SPRINKLERS SHALL BE INSTALLED IN THE AREAS LISTED SEC. 903.3.2 OF NYC BUILDING CODE.
10. AUTOMATIC SPRINKLERS SHALL BE INSTALLED WITH DUE REGARD TO OBSTRUCTIONS THAT WILL DELAY ACTIVATION OR OBSTRUCT THE WATER DISTRIBUTION PATTERN. AUTOMATIC SPRINKLERS SHALL BE INSTALLED IN OR UNDER COVERED KIOSKS, DISPLAYS, BOOTH, CONCESSION STANDS, OR EQUIPMENT THAT EXCEED 4 FEET IN WIDTH. NOT LESS THAN 3 FOOT CLEARANCE SHALL BE MAINTAINED BETWEEN AUTOMATIC SPRINKLERS AND TOP OF PILES OF COMBUSTIBLE FIBERS SEC. 903.3.3 OF NYC BUILDING CODE.
11. WATER SUPPLIES FOR AUTOMATIC SPRINKLER SYSTEM SHALL COMPLY WITH SEC. 903.3.5 OF NYC BUILDING CODE AND SEC. 903.3.1 THE POTABLE WATER SUPPLY SHALL BE PROTECTED AGAINST BACK FLOW IN ACCORDANCE WITH THE REQUIREMENTS OF SEC. 903.3.5 THE NYC PLUMBING CODE, AND RULES OF THE NYC DEPARTMENT OF ENVIRONMENTAL PROTECTION.
12. A SECONDARY ON–SITE WATER SUPPLY EQUAL TO THE HYDRAULICALLY CALCULATED SPRINKLER DEMAND, SHALL BE PROVIDED FOR HIGH–RISE BUILDINGS IN SEISMIC DESIGN CATEGORY "C" OR "D" AS DETERMINED BY THIS CODE, AND IN ANY HIGH–RISE BUILDING GREATER THAN 300 FEET IN HEIGHT. THE SECONDARY WATER SUPPLY SHALL HAVE A DURATION NOT LESS THAN 30 MINUTES AS DETERMINED BY THE OCCUPANCY HAZARD CLASSIFICATION IN ACCORDANCE WITH NFPA 13–2007 AS PER SEC 903.3.5.2 OF THE NYC BUILDING CODE.
13. FIRE HOSE THREADS USED IN CONNECTION WITH AUTOMATIC SPRINKLER SYSTEMS SHALL BE APPROVED AND COMPATIBLE WITH FIRE DEPARTMENT HOSE THREADS AS PER SEC 903.3.6 OF THE NYC PLUMBING CODE.
14. ALL VALVES CONTROLLING THE WATER SUPPLY FOR AUTOMATIC SPRINKLER SYSTEM, PUMPS, TANKS, WATER LEVELS AND TEMPERATURES, CRITICAL AIR PRESSURES AND WATER–FLOW SWITCHES ON ALL SPRINKLER SYSTEMS SHALL BE ELECTRICALLY SUPERVISED BY THE FIRE ALARM SYSTEM AS PER SEC. 903.4 OF THE NYC BUILDING CODE.
15. APPROVED SUPERVISED INDICATING CONTROL VALVES SHALL BE PROVIDED AT THE POINT OF CONNECTION TO THE RISER ON EACH FLOOR IN HIGH–RISE BUILDINGS AS PER SE. 903.4.3 OF THE NYC BUILDING CODE.
16. THE DOCUMENTS OR PORTIONS LISTED IN NFPA 13–2007 ARE REFERENCED AND SHALL BE CONSIDERED PART OF THE REQUIREMENTS OF THIS DOCUMENT.
17. OCCUPANCY CLASSIFICATION SHALL COMPLY WITH CHAPTER 5 OF NFPA 13–2007 AND CHAPTER 3 OF NYBC 2014.
18. PROTECTION REQUIREMENTS FOR MIXED COMMODITIES SHALL BE IN ACCORDANCE WITH NFPA 13–2007.
19. REQUIREMENTS FOR CORRECT USE OF SPRINKLER SYSTEM COMPONENTS SHALL COMPLY WITH NFPA 13–2007.
20. THE K–FACTOR, RELATIVE DISCHARGE, AND MARKING IDENTIFICATION FOR SPRINKLERS HAVING DIFFERENT ORIFICE SIZES SHALL BE IN ACCORDANCE WITH NFPA 13–2007.
21. LARGE DROP AND ESFR SPRINKLERS SHALL HAVE A MINIMUM NOMINAL K–FACTOR OF 11.2 IN ACCORDANCE WITH THE REQUIREMENTS OF NFPA 13–2007.
22. AUTOMATIC SPRINKLERS SHALL HAVE THEIR FRAME ARMS, DEFLECTOR, COATING MATERIAL, OR LIQUID BULB COLORED IN ACCORDANCE WITH THE REQUIREMENTS OF NFPA 13–2007.
23. LISTED CORROSION RESISTANT SPRINKLER SHALL BE INSTALLED IN LOCATIONS WHERE CHEMICALS, MOISTURE, OTHER CORROSIVE VAPORS SUFFICIENT TO CAUSE CORROSION OF SUCH DEVICES EXIST WITHIN NFPA 13–2007.
24. ALL CONTROL, DRAIN, AND TEST CONNECTION VALVES SHALL BE PROVIDED WITH PERMANENTLY MARKED WEATHERPROOF METAL OR RIGID PLASTIC IDENTIFICATION SIGNS, REFER TO NFPA 13–2007.
25. FIRE DEPARTMENT CONNECTIONS SHALL BE EQUIPPED WITH LISTED PLUGS OR CAPS, PROPERLY SECURED AND ARRANGED FOR EASY REMOVAL BY THE FIRE DEPARTMENT. REFER TO NFPA 13–2007.
26. REQUIREMENTS OF DRY PIPE SYSTEM INSTALLATION SHALL COMPLY WITH NFPA 13–2007.
27. REQUIREMENTS OF PRE–ACTION & DELUGE SYSTEM INSTALLATION SHALL COMPLY WITH OF NFPA 13–2007.
28. OUTSIDE SPRINKLERS FOR PROTECTION AGAINST EXPOSURE FIRE SHALL COMPLY WITH NFPA 13–2007.
29. THE MAXIMUM FLOOR AREA OR ANY ONE FLOOR TO BE PROTECTED BY A SINGLE RISER FROM A CONTROL VALVE AND ALARM DEVICE SHALL COMPLY WITH NFPA 13–2007.
30. WHERE CIRCUMSTANCES REQUIRE THE USE OF OTHER THAN ORDINARY TEMPERATURE –RATED SPRINKLERS, STANDARD RESPONSE SPRINKLERS SHALL BE PERMITTED TO BE USED REFER TO NFPA 13–2007.
31. WHEN EXISTING LIGHT HAZARD SYSTEMS ARE CONVERTED TO USE QUICK–RESPONSE OR RESIDENTIAL SPRINKLERS ALL SPRINKLERS IN A COMPARTMENTED SPACE SHALL BE CHANGED. REFER TO NFPA 13–2007.
32. SPRINKLERS OF INTERMEDIATE AND HIGH TEMPERATURE RATINGS SHALL BE INSTALLED IN SPECIFIC LOCATIONS AS REQUIRED BY NFPA 13–2007.
33. SPRINKLERS SHALL BE LOCATED, SPACED AND POSITIONED IN ACCORDANCE WITH THE REQUIREMENTS OF NFPA 13–2007.
34. PROTECTION AREAS AND MAXIMUM SPACING FOR EACH HAZARD SHALL COMPLY WITH NFPA 13–2007.
35. REQUIREMENTS OF DWELLING UNITS PROTECTION SHALL COMPLY WITH NFPA 13–2007.
36. REQUIREMENTS OF STAGES AREA PROTECTION SHALL COMPLY WITH NFPA 13–2007.
37. DRAIN CONNECTIONS FOR SYSTEMS SUPPLY RISERS AND MAINS SHALL BE SIZED AS SHOWN IN TABLE 8.16.2.4.2 OF APPENDIX Q–NYC BUILDING CODE.
38. TYPES OF HANGERS SHALL BE IN ACCORDANCE WITH THE REQUIREMENT OF NFPA 13–2007.
39. MAXIMUM DISTANCE BETWEEN HANGERS SHALL BE COMPLY WITH NFPA 13–2007.
40. THE WATER SUPPLY FOR SPRINKLERS SHALL BE DETERMINED BY DENSITY/AREA CURVE, REFER TO NFPA 13–2007.
41. HYDRAULIC DESIGN AREA REDUCTION FOR QUICK RESPONSE SPRINKLERS SHALL COMPLY WITH NFPA 13–2007.
42. CALCULATIONS FOR DRY SYSTEM WATER DELIVERY SHALL BE BASED ON THE HAZARD SHOWN IN NFPA 13–2007.
43. DESIGN CRITERIA OF WATER CURTAIN SHALL COMPLY WITH NFPA–13–2007.
44. TYPE OF SPRINKLER HEAD IN GENERAL STORAGE SHALL COMPLY WITH NFPA 13–2007.
45. MINIMUM OPERATING PRESSURE OF ANY SPRINKLER REFER TO NFPA 13–2007.
46. NUMBER OF WATER SUPPLY FOR SPRINKLER SYSTEM SHALL COMPLY WITH NFPA 13–2007 AND APPENDIX Q OF NYC BUILDING CODE.
47. A SPRINKLER SYSTEM INSTALLED IN ACCORDANCE WITH THIS STANDARD SHALL BE PROPERLY INSPECTED, TESTED AND MAINTAINED IN ACCORDANCE WITH NFPA 25–2014 AND NYC FIRE CODE.

SPRINKLER DESIGN CRITERIA

1. THE SPRINKLER SYSTEM IN THIS BUILDING SHALL BE IN ACCORDANCE WITH NYC BUILDING CODE 2014 AND NFPA–13 2007. THE BUILDING OCCUPANCY IS CLASS 'A'.
2. OCCUPANCY CRITERIA
   - A. LIGHT HAZARD – OFFICE SPACE, SEATING AREA, AND CONFERENCE ROOMS DENSITY 0.10 GPM/SQ. FT. OVER MOST HYDRAULICALLY REMOTE 1500 SQ. FT. MAXIMUM COVERAGE PER SPRINKLER HEAD IS 225 SQ. FT. MAXIMUM AREA LIMITATION.
   - B. ORDINARY HAZARD – PLACES OF ASSEMBLIES, STORAGE, MECHANICAL EQUIPMENT ROOMS, KITCHEN AND FOOD SERVICE AREAS. MINIMUM DENSITY DISCHARGE OF 0.10 GPM/SQ. FT. OVER MOST HYDRAULICALLY REMOTE 1500 SQ. FT. MAXIMUM COVERAGE PER SPRINKLER HEAD IS 130 SQ. FT.
3. MINIMUM PRESSURE AND WATER DISCHARGE:
   - A. ANY SPRINKLER HEAD SHALL HAVE A MINIMUM PRESSURE OF 7 PSI OR 14.87 GPM. SPRINKLER HEADS LOCATED AT WATER CURTAIN SHALL PROVIDE MINIMUM 3GPM PER LINEAR FOOT.
4. HYDRAULICALLY CALCULATED SYSTEMS SHALL MEET THE FOLLOWING CRITERIA:
   - A. EXACT LOCATION OF SPRINKLER HEADS IN FINISHED AREAS WITH SUSPENDED CEILINGS SHALL BE AS INDICATED ON ARCHITECTURAL REFLECTED CEILING PLANS WITH HEADS IN CENTER OF TILES.
   - B. WHENEVER ROLLED GROOVED CONNECTIONS ARE USED, ALLOWANCE FOR ADDITIONAL PRESSURE LOSS AT GROOVES SHALL BE MADE AS FOLLOWS:

1. FOR EACH COUPLING ON STRAIGHT RUN INCLUDING STRAIGHT FLOW THROUGH TEE OR CROSS: ADD 1 EQUIVALENT FOOT OF PIPE.
2. FOR EACH COUPLING AT ELBOW, TEE OR CROSS WHERE DIRECTION OF FLOW CHANGES: ADD 2 EQUIVALENT FEET OF PIPE.
   - A. EQUIVALENT FITTING LENGTHS USED IN HYDRAULIC CALCULATIONS SHALL BE IN ACCORDANCE WITH NFPA STANDARD NO. 13, 2007 AS REFERENCED BY THE NYCBC. WHEREVER FITTINGS ARE USED IN CONJUNCTION WITH SCHEDULE 40 PIPE, EQUIVALENT FITTING LENGTHS INDICATED IN NFPA 13 SHALL BE DERIVED FROM THE FOLLOWING FORMULA:

     (ACTUAL INSIDE DIAMETER)^4.87 / (SCHED 40 PIPE INSIDE DIAMETER) = FACTOR
   - B. DISCHARGE FROM EACH SPRINKLER HEAD SHALL NOT BE LESS THAN REQUIRED FOR AREA COVERED BY THE HEAD. AREA COVERAGE PER HEAD SHALL BE DETERMINED IN ACCORDANCE WITH NFPA STANDARD NO. 13, 2007 AS REFERENCED BY NYCBC.
   - C. HYDRAULIC CALCULATIONS SHALL BE BROUGHT BACK TO CONNECTION WATER SUPPLY.
5. FLOW TEST DATA
   - A. CONTRACTOR SHALL OBTAIN FLOW DATA INDICATING RESIDUAL PRESSURES ASSOCIATED WITH BUILDING SYSTEM AND SUBMIT DATA WITH HYDRAULIC CALCULATIONS.
   - B. THESE HYDRAULIC CALCULATIONS ALONG WITH PUMP OR WATER FLOW TEST ARE TO BE SUBMITTED FOR APPROVAL TO THE ENGINEER AND TO THE INSURANCE UNDERWRITER HYDRAULIC CALCULATIONS SHALL BE BROUGHT BACK TO THE LOCATION OF THE PUMP WATER FLOW TEST.
   - C. CONSTRUCTION MAY ONLY BEGIN WHEN APPROVALS ARE GRANTED.
   - D. RESULT OF HYDRAULIC CALCULATIONS SHALL INDICATE MINIMUM 10% PRESSURE SAFETY MARGIN. I.E. EXCESS OF PRESSURE AVAILABLE OVER PRESSURE REQUIRED.
   - E. PRELIMINARY WATER SUPPLY INFORMATION:
   - F. AVAILABLE PRESSURE AT FLOOR. SEE RISER DIAGRAM.

NYC ECC EXEM 00

THIS PROJECT IS EXEMPT FROM COMPLIANCE WITH THE NEW YORK CITY ENERGY CONSERVATION CODE (NYCECC) AS PER CHAPTER 1, SECTION 101.6 BECAUSE THE EXISTING ROOF, WALL OF FLOOR CAVITY IS NOT EXPOSED AND THE ENERGY USE OF THE BUILDING IS NOT INCREASED.

SYMBOL LIST

	NEW PIPING OR EQUIPMENT
	EXISTING PIPING TO REMAIN
	NEW PENDANT TYPE SPRINKLER HEAD
	NEW UPRIGHT TYPE SPRINKLER HEAD
(E) (E) (E)	EXISTING SPRINKLER HEAD TO REMAIN
	NEW CONCEALED TYPE SPRINKLER HEAD
	CAPPED OR PLUGGED OUTLET
	EXISTING TO BE REMOVED.
	EXISTING HEAD TO BE REMOVED. PIPING TO BE EXTENDED TO NEW LOCATION WITH NEW HEAD.
	SIDEWALL SPRINKLER HEAD
	EXTENDED SIDEWALL HALLWAY SPRINKLER
	NEW CONNECTION

ABBREVIATIONS

WFS	WATERFLOW SWITCH
TS	TAMPER SWITCH
DC	DETECTOR CHECK VALVE
CC	CAPPED CONNECTION
SDA	SPRINKLER DRAIN ASSEMBLY
F.D.	FLOOR DRAIN
SCVR	SPRINKLER CONTROL VALVE RIG
FCV	FIRE CONTROL VALVE RIG

SPRINKLER DRAWING LIST

NO.	DWG #	DESCRIPTION
1	SP–101.00	SPRINKLER LIST, NOTES, SYMBOLS, ABBREVIATIONS AND SITE PLAN
2	SP–102.00	SPRINKLER NOTES AND SCHEDULES
3	SP–201.00	SPRINKLER DETAILS
4	SP–301.00	SPRINKLER CELLAR FLOOR PLAN
5	SP–302.00	SPRINKLER GROUND FLOOR PLAN
6	SP–303.00	SPRINKLER 2ND FLOOR PLAN
7	SP–304.00	SPRINKLER 3RD FLOOR PLAN
8	SP–305.00	SPRINKLER 4TH–8TH FLOOR PLAN
9	SP–306.00	SPRINKLER 11TH–13TH FLOOR PLAN
10	SP–307.00	SPRINKLER 14TH FLOOR PLAN
11	SP–308.00	SPRINKLER BULKHEAD PLAN
12	SP–401.00	SPRINKLER/FSP RISER DIAGRAM
13	SP–402.00	SPRINKLER TEMPORARY DRY FIRE STANDPIPE RISER DIAGRAM

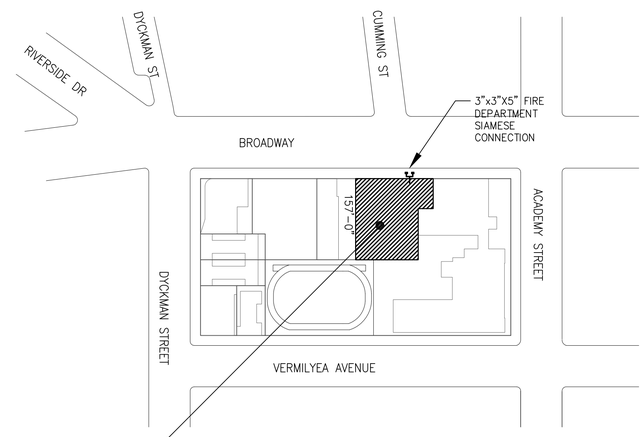

4790 BROADWAY
NEW YORK, NY 10034
BLOCK: 2233
TAX LOT: 13 & 20
ZONING DISTRICT: C4–4D

SITE PLAN
NOT TO SCALE

N.

BUILDING DEPARTMENT NOTE: "THIS PLAN IS APPROVED ONLY FOR WORK INDICATED ON THE APPLICATION SPECIFICATION SHEET. ALL OTHER MATTERS SHOWN ARE NOT TO BE RELIED UPON, OR TO BE CONSIDERED AS EITHER BEING APPROVED OR IN ACCORDANCE WITH APPLICABLE CODES".

ALTERATION OR RE–USE OF THIS DRAWING FOR OTHER THAN THIS PROJECT WITHOUT WRITTEN CONSENT OF THE ABOVE ENGINEER IS PROHIBITED BY LAW.

Client:
RANGER PROPERTIES
4790 BROADWAY
NEW YORK, NY 10034

Architect:
FOGARTY FINGER architecture | interiors
69 Walker St, New York, NY 10013
t 212 966 7450 f 212 966 7444

Library Architect:
Andrew Berman Architect, PLLC
77 Chambers Street, 4th Floor
New York, NY 10007
Tel 212.226.5998

Structural:
Thornton Tomasetti
51 Madison Avenue
New York, NY 10010
Tel 917.661.7800

MEP / FP:
Concessi Engineering, PC
499 7th Avenue, 11th Floor South Tower
New York, NY 10018
Tel 212.629.6810

FACADE:
SIMPSON GUMPERTZ & HEGER
550 7th Avenue, 10th Floor
New York, NY 10018
Tel 212.271.7000

CODE:
METROPOLIS
22 Courtland Street, 10th Floor
New York, NY 10007
Tel 212.233.6344

No.	Date	Issue
1	02/06/19	ISSUED FOR FILING / DD ESTIMATING

Project:
4790 BROADWAY
NEW YORK, NY 10034

Drawing Title:
SPRINKLER LIST, NOTES, SYMBOLS, ABBREVIATIONS AND SITE PLAN

Seal & Signature:
STATE OF NEW YORK · ROBERT V. CONESSA · No. 86705 · LICENSED PROFESSIONAL ENGINEER

DATE (MM–DD–YY): 11–02–2018
PROJECT No.: 7815.00
DRAWING BY: DP
CHK BY: JV/RC
DWG. No.: SP–101.00
CADD FILE No.: –
01 OF 13

GENERAL NOTES FOR DEMOLITION WORK

1. ALL EQUIPMENT, PIPING, ETC., TO BE REMOVED, SHALL BE DISPOSED OF, TURNED OVER TO OR SALVAGE, AS DIRECTED. THEY SHALL NOT BE REMOVED FROM THE PREMISES WITHOUT APPROVAL.
2. THE EXISTING SYSTEMS TO REMAIN SHALL BE LEFT IN PERFECT WORKING ORDER AT COMPLETION OF DEMOLITION WORK.
3. LOCATIONS AND SIZES OF EXISTING PIPING ARE APPROXIMATE EXACT SIZES AND LOCATIONS OF ALL EXISTING PIPING SHALL BE VERIFIED ON THE JOB.
4. NO REMOVED EXISTING PIPING SHALL BE REUSED.
5. ALL EXISTING, EXPOSED, UNNECESSARY PIPING RELATED TO WORK BEING REMOVED SHALL BE COMPLETELY REMOVED.
6. DO NOT INTERRUPT ANY OF THE SERVICES OF THE EXISTING COMPLEX, NOR INTERFERE WITH THE SERVICES IN ANY WAY WITHOUT EXPRESSED PERMISSION FROM BUILDING ENGINEER. SUCH INTERRUPTIONS AND INTERFERENCE SHALL BE MADE AS BRIEF AS POSSIBLE AND ONLY AT THE DESIGNATED TIMES.
7. WHEN DEMOLITION WORK REQUIRES THE SHUTDOWN OF EXISTING OPERATING SYSTEMS, THE DEMOLITION WORK SHALL BE PERFORMED ONLY AFTER NOTIFYING THE BUILDING AT LEAST 2 WEEKS BEFORE START AND OBTAINING WRITTEN AUTHORIZATION.
8. REMOVE RUBBISH FROM PREMISES AND SITE AT THE END OF EACH WORK DAY AND AS DIRECTED.
9. TORCH CUTTING, BEFORE PROCEEDING WITH WORK, SUBMIT CERTIFICATE OF COMPLIANCE AND NOTIFY BUILDING FIRE WARDEN.
10. FIRE PROTECTION DEMOLITION WORK SHALL BE IN STRICT CONFORMITY WITH THE NEW YORK CITY BUILDING CODE AND OTHER AUTHORITIES HAVING JURISDICTION.

BUILDING CODE TENANT PROTECTION PLAN NOTES:

ALL WORK SHALL COMPLY WITH SECTION 28-104.8.4 OF THE ADMINISTRATIVE CODE AS SUMMARIZED BELOW:

1. GENERAL: CONSTRUCTION DOCUMENTS FOR ALTERATIONS OF BUILDINGS IN WHICH ANY DWELLING UNIT WILL BE OCCUPIED DURING CONSTRUCTION SHALL INCLUDE A TENANT PROTECTION PLAN WITH SPECIFIC DETAILS THAT DESCRIBES THE MEANS AND METHODS TO SAFEGUARD THE SAFETY AND HEALTH OF THE OCCUPANTS.
2. EGRESS: AT ALL TIMES IN THE COURSE OF CONSTRUCTION, PROVISION SHALL BE MADE FOR ADEQUATE EGRESS AS REQUIRED BY THIS CODE AND THE TENANT PROTECTION PLAN SHALL IDENTIFY THE EGRESS THAT WILL BE PROVIDED. REQUIRED EGRESS SHALL NOT BE OBSTRUCTED AT ANY TIME EXCEPT WHERE APPROVED BY THE COMMISSIONER.
3. FIRE SAFETY: ALL NECESSARY LAWS AND CONTROLS, INCLUDING THOSE WITH OCCUPIED DWELLINGS, AS WELL AS ADDITIONAL SAFETY MEASURES NECESSITATED BY THE CONSTRUCTION SHALL BE STRICTLY OBSERVED AND INCLUDE BUT ARE NOT LIMITED TO THE FOLLOWING:
   - A) ALL BUILDING MATERIALS STORED AT CONSTRUCTION AREA, AND/OR IN ANY AREA OF THE WORK SITE ARE TO BE SECURED IN A LOCKED AREA. ACCESS TO SUCH AREAS ARE TO BE CONTROLLED BY OWNER/GENERAL CONTRACTOR.
   - B) ALL MATERIALS ARE TO BE STORED IN AN ORDERLY FASHION.
   - C) ALL FLAMMABLE MATERIALS ARE TO BE KEPT TIGHTLY SEALED IN THEIR RESPECTIVE.
   - D) ALL FLAMMABLE MATERIALS ARE TO BE USED AND STORED IN AN ADEQUATELY VENTILATED SPACE.
   - E) ALL ELECTRICAL POWER IS TO BE SHUT OFF WHERE THERE IS AN EXPOSED CONDUIT.
   - F) ALL ELECTRICAL POWER TO THE WORK SITE IS TO BE SHUT OFF AFTER WORKING HOURS.
4. HEALTH REQUIREMENTS
   - A) DEBRIS, DIRT AND DUST TO BE KEPT TO A MINIMUM AND CONFINED TO IMMEDIATE CONSTRUCTION AREA.
   - B) CONTRACTOR TO ISOLATE CONSTRUCTION AREA FROM OCCUPIED BUILDING AREA BY MEANS OF HEAVY WEIGHT DROP CLOTHS.
   - C) DEBRIS, DIRT, AND DUST TO BE CLEANED UP AND CLEANED FROM WORK SITE PERIODICALLY TO AVOID EXCESSIVE ACCUMULATION AS SAFETY MEASURE.
5. COMPLIANCE WITH HOUSING STANDARDS: THE REQUIREMENTS OF THE NEW YORK CITY HOUSING MAINTENANCE CODE, AND, WHERE APPLICABLE, THE NEW YORK STATE MULTIPLE DWELLING LAW SHALL BE STRICTLY OBSERVED.
6. STRUCTURAL SAFETY: NO STRUCTURAL WORK SHALL BE DONE THAT MAY ENDANGER THE OCCUPANTS.
7. NOISE CONTROL
   - A) CONSTRUCTION OPERATIONS WILL BE CONFINED TO NORMAL WORKING HOURS.
   - B) CONTRACTOR TO OBTAIN WRITTEN CONSENT OF ALL PARTIES AFFECTED BY HIS WORKING DURING OTHER THAN NORMAL WORKING HOURS.
   - C) CONTRACTOR SHALL OBTAIN AFTER HOUR WORK PERMIT FROM THE DEPARTMENT OF BUILDINGS AND APPLICABLE AGENCIES IF WORKING OTHER THAN NORMAL WORKING HOURS.
8. CONSTRUCTION OPERATIONS WILL NOT INVOLVE INTERRUPTION OF HEATING, WATER, OR ELECTRICAL SERVICES TO TENANTS OF BUILDING.
9. CONSTRUCTION WORK WILL BE CONFINED TO AREAS OF WORK DETAILED ON THIS PLAN AND WILL NOT CREATE DUST, DIRT, DEBRIS OR SUCH INCONVENIENCES TO OTHER RESIDENTIAL AREAS OF THE BUILDING.
10. THERE WILL BE NO ACCESS OF THE WORK SITE AREAS BY TENANTS OR THE PUBLIC DURING CONSTRUCTION OPERATIONS UNTIL OTHERWISE ALLOWED BY ENGINEER AND OR BUILDING OWNER.

SCHEDULE OF SPRINKLER HEADS

(SPRINKLER HEADS TO MATCH EXISTING HEADS OR EQUIVALENT REPLACEMENT FOR DISCONTINUED HEADS)

SYMBOL	MANUFACTURER & MODEL No.	TYPE	LOCATION	FINISH & REMARKS	TEMP. RATING	'K' FACTOR	SP. HD. COVERAGE	MIN. FLOW	MIN. PRESS. P.S.I.	APPROVALS
●	RELIABLE MOD. G5-56 QUICK RESPONSE MEA 258-93-E	CONCEALED	WHERE INDICATED ON PLANS	AS APPROVED BY ARCH.	NOTE #1 AND #3	5.6	VARIES	NOTE #4	NOTE #4	UL/FM/NYC
○	RELIABLE MOD. F1FR QUICK RESPONSE MEA 258-93-E	UPRIGHT	WHERE INDICATED ON PLANS	AS APPROVED BY ARCH.	NOTE #1 AND #3	5.6	VARIES	NOTE #4	NOTE #4	UL/FM/NYC
◁	RELIABLE F1R QUICK RESPONSE MEA 258-93-E	SIDEWALL	WHERE INDICATED ON PLANS	AS APPROVED BY ARCH.	NOTE #1 AND #3	8.0	VARIES	NOTE #4	NOTE #4	UL/FM/NYC

NOTES:

1. SPRINKLER HEADS SHALL BE INSTALLED AS PER MANUFACTURER'S RECOMMENDATIONS.
2. PROVIDE METAL WIRE GUARDS WHERE SPRINKLERS ARE SUBJECT TO DAMAGE, AND SPRINKLER HEADS LOCATED UNDER HVAC DUCTS IN MECHANICAL EQUIPMENT ROOMS WHEN LOCATED LOWER THAN 7'-0" A.F.F. ETC.
3. ALL SPRINKLER HEADS THROUGHOUT THE FACILITY SHALL BE OF THE ORDINARY TEMPERATURE RATING EXCEPT AS FOLLOWS:
   - a. SPRINKLER HEADS IN SHOWERS SHALL BE OF INTERMEDIATE TEMPERATURE RATING (175° TO 225°).
   - b. SPRINKLER HEADS LOCATED CLOSE TO HEATERS, STEAM PIPING OR LOW-PRESSURE BLOW-OFF VALVE SHALL BE OF THE TEMPERATURE RATING AS REQUIRED BY NFPA 13.
   - c. ALL HEAT GENERATING EQUIPMENT WHICH CAN AFFECT THE TEMPERATURE RATING OF THE SPRINKLER HEADS SHALL BE CLEARLY IDENTIFIED ON THE SHOP DRAWINGS PRIOR TO SUBMISSION FOR APPROVAL.
   - a. SPRINKLER HEADS IN SKYLIGHTS SHALL BE OF INTERMEDIATE TEMPERATURE RATING (175° TO 225°).
4. SPRINKLER HEADS MINIMUM FLOW & MINIMUM PRESSURE REQUIREMENTS TO BE BASED ON HYDRAULIC CALCULATION DESIGN DENSITIES.
5. ALL SPRINKLER HEAD FINISHES TO BE APPROVED BY ARCHITECT.

NEW SPRINKLER WORK INSTALLATION CRITERIA

1. EACH BIDDER SHALL VISIT THE SITE AND BECOME INFORMED AS TO THE CONDITION OF THE PREMISES AND THE EXTENT AND CHARACTER OF WORK REQUIRED. NO ADDITIONAL COMPENSATION WILL BE APPROVED DUE TO FIELD CONDITIONS.
2. THE CONTRACTOR SHALL VERIFY THE EXACT LOCATION OF AREA TO BE PROVIDED WITH SPRINKLER PROTECTION AND LOCATE EXISTING DUCT WORK WITHIN AREA THAT REQUIRE ADDITIONAL SPRINKLER PROTECTION BELOW DUCTS DUE TO INTERFERENCE OF NORMAL SPRAY PATTERN OF SPRINKLER HEADS LOCATED AT UNDERSIDE OF FLOOR SLAB ABOVE.
3. SPRINKLER INSTALLATIONS SHALL BE COMPLETE WITH ALL FITTINGS, PIPES, BRANCHES, TESTS, DRAINS AND LOW POINTS IN SYSTEM AND HANGERS.
4. ALL PIPING AND EQUIPMENT SHALL BE SUBSTANTIALLY SUPPORTED FROM THE BUILDING STRUCTURE. HANGERS AND SUPPORTS SHALL BE SPECIFICALLY APPROVED FOR USE IN SPRINKLER SYSTEM.
   - A. WHERE OVERHEAD CONSTRUCTION DOES NOT PERMIT FASTENING OF HANGER RODS IN REQUIRED LOCATIONS, PROVIDE ADDITIONAL STEEL FRAMING AS REQUIRED AND APPROVED.
   - B. NO SPRINKLER PIPING SHALL BE HUNG FROM THE PIPING OF OTHER TRADES OR DUCTWORK. HANGERS SHALL BE OF HEAVY CONSTRUCTION, SUITABLE FOR THE SIZE OF PIPE TO BE SUPPORTED.
5. SPRINKLER HEADS HAVE BEEN LOCATED TO COMPLY WITH SPRINKLER CODE REQUIREMENTS AND ARE APPROXIMATE.

DESIGN CRITERIA FOR ELECTRICAL/TELEPHONE SPACES

1. ALL SWITCHGEAR SPACES AND ELEVATOR MACHINE ROOMS SHALL BE EXEMPT OF SPRINKLER PROTECTION.
2. ALL ELECTRICAL CLOSETS SHALL HAVE A NON-FERROUS METAL DRIP PAN DIRECTLY BELOW THE SPRINKLER PIPING, ABOVE THE BUSWAY.
3. ALL TELEPHONE SPACES SHALL BE PROVIDED WITH SPRINKLER PROTECTION.

"GENERAL"-FIRE PROTECTION CONTRACTOR NOTES

1. ALL NEW PIPING SHALL BE HYDROSTATICALLY TESTED PER THE REQUIREMENTS OF THE NYC BUILDING CODE AND NFPA-13. CONTRACTOR SHALL INCLUDE IN HIS BID, SEGREGATION OF EXISTING SPRINKLER MAIN AS REQUIRED WITHIN THE AREA OF WORK IN ORDER TO PROPERLY TEST NEW INSTALLATIONS.
2. DUE TO TIGHT CONSTRUCTION CONDITIONS, AND LIMITED SPACE WITHIN CEILING CAVITY, THE F.P. (SPRINKLER) CONTRACTOR MUST COORDINATE WITH ALL OTHER TRADES, AND WHEN NECESSARY, PROVIDE FOR HOLES THRU STRUCTURAL MEMBERS, BUT ONLY AFTER WRITTEN APPROVAL BY THE ARCHITECT/ENGINEERS AND BUILDING MANAGEMENT. THE LOCATION OF ALL NEW SPRINKLER PIPING IS APPROXIMATE AND INDICATED FOR BID PURPOSE ONLY. THE FIRE PROTECTION CONTRACTOR MUST COORDINATE THE SPRINKLER PIPING SYSTEM (WITH ALL OTHER TRADES BUT MOST IMPORTANT WITH THE H.V.A.C. ELECTRICAL AND COMMUNICATION CONTRACTORS) SO THAT IT CAN BE PROPERLY SUPPORTED FROM BUILDING WITHOUT USING ANY EXCESSIVE AMOUNT OF STRUCTURE ABOVE SUPPLEMENTAL STEEL.
3. ALL EXISTING CONDITIONS COULD NOT BE COMPLETELY DETAILED ON THE DRAWINGS AND ARE NOT LIMITED TO PIPING AND SPRINKLER HEADS, EQUIPMENT, ETC. THE FIRE PROTECTION CONTRACTOR SHALL SURVEY THE SITE AND INCLUDE ALL REQUIRED CHANGES IN MAKING UP THEIR BID PROPOSAL.
4. CONTRACTOR SHALL INCLUDE IN HIS BID PRICE, CUTTING INTO AND CONNECTIONS TO EXISTING SPRINKLER PIPING
5. FOR CEILING HEIGHTS, LIGHTING, ETC., SEE ARCH. REFLECTING CEILING PLANS.
6. SPRINKLER BRANCH PIPE SIZES SHALL BE A MINIMUM OF 1 INCH, UNLESS OTHERWISE NOTED.

FIRE PROTECTION MATERIAL SCHEDULE

SYSTEM

NOTES:
1. FOR REQUIRED PRESSURE RATINGS, REFER TO RISER DIAGRAM.
2. ALL MATERIALS SELECTED ON THIS SCHEDULE MUST BE APPROVED BY THE LOCAL AUTHORITIES.
3. TO BE USED DOWNSTREAM OF SPRINKLER FLOOR CONTROL VALVE (2½" AND LARGER ONLY).
4. TO BE USED ON RISERS, MAINS, AND SPRINKLER BRANCH PIPING UP TO 2".
5. COPPER TUBING TO BE USED FOR MRI AREA OR PRE-ACTION SPRINKLER SYSTEMS ONLY
6. USE OF ANY PIPING OR TUBING WITH I.D. OR O.D. OTHER THAN SPECIFIED IS NOT PERMITTED.

	PIPE								FITTINGS								JOINTS				
	REQUIRED	TYPE 'K' OR 'L' COPPER TUBING	DUCTILE IRON	CAST IRON W/TR PIPE	STEEL SCHED 40	STEEL SCHED 80	BLACK	GALVANIZED	CEMENT LINED	MALLEABLE IRON	CLASS D	BLACK	GALVANIZED	VICTAULIC	DUCTILE IRON	WROUGHT COPPER	THREADED	MECH JOINT-FLANGED (AS PER SPEC)	VICTAULIC	CAULKED	BRAZED
SPRINKLER (SEE NOTE 3)					●		●			●			●	●	●		●	●		●	
SPRINKLER (SEE NOTE 4)					●		●			●			●		●		●	●			
SPRINKLER DRAIN PIPE					●			●						●			●				

SUBMITTAL SCHEDULE

ITEM	SHOP DRAWINGS/REPORTS	CATALOG CUTS
COORDINATED PIPING AND SPRINKLER HEAD LAYOUT	4 COPIES OR PDF	
HYDRAULIC CALCULATIONS	REPORT	4 COPIES OR PDF
SPRINKLER HEADS		4 COPIES OR PDF
HANGER AND INSERTS		4 COPIES OR PDF
PERMITS AND APPROVALS		4 COPIES OR PDF

SPECIAL INSPECTIONS TR-1

ITEM	CODE/SECTION
SPRINKLER SYSTEMS	BC 1704.23 FC 901.7 FC 903
FIRE-RESISTANT PENETRATIONS AND JOINTS	BC 1704.27
FINAL	28-116.2.4.2, BC 110.5, DIRECTIVE 14 OF 1975, AND 1 RCNY §101-10

SPRINKLER PIPING INSTALLATION NOTES:

1. SPRINKLER CONTRACTOR TO COORDINATE WITH ALL OTHER TRADES FOR INSTALLATION OF SPRINKLER PIPING WITH SUSPENDED CEILING. SPRINKLER CONTRACTOR TO COORDINATE WITH G.C. FOR ALL NECESSARY HOLES THRU EXISTING BEAMS WHERE REQUIRED.
2. IN THE CASE WHERE LARGE PARTS OF THE SPRINKLER GRID ARE TO BE RE-CONFIGURED AND THE FIRE PROTECTION FOR THE FLOOR WILL BE INOPERATIVE FOR MORE THAN 24 HOURS, A TEMPORARY FIRE PROTECTION LOOP SHALL BE INSTALLED TO PROTECT THE CORE AREAS AND THE PATHS OF EGRESS OR A FIRE WATCH SHALL BE ASSIGNED, IN EITHER CASE AT CONTRACTOR'S COST.

EXISTING BUILDING:
ALTERATIONS ON PARTIALLY OCCUPIED FLOORS
IN AN EXISTING BUILDING THAT IS FULLY SPRINKLERED, IF A FLOOR IS TO BE PARTIALLY OCCUPIED DURING AN ALTERATION, TCSP AS DESCRIBED IN PART I OF THIS BULLETIN SHALL NOT BE REQUIRED. HOWEVER, THE ENTIRE FLOOR SPRINKLER SYSTEM SHALL REMAIN INTACT, EXCEPT THAT SPRINKLER HEADS IN THE AREA UNDERGOING ALTERATIONS SHALL COMPLY WITH AND SHALL BE PLACED IN ACCORDANCE WITH THE APPLICABLE REQUIREMENTS OF THE CODE-REFERENCED NFPA 13. WHERE ALTERATIONS CREATE NEW AREAS NOT PREVIOUSLY PROTECTED BY SPRINKLER COVERAGE (E.G. BEAM POCKETS), ADDITIONAL SPRINKLER HEADS SHALL BE REQUIRED TO ENSURE FULL SPRINKLER COVERAGE.

OWNER SHALL NOTIFY FDNY OF SPRINKLER SYSTEM DISCONNECTION BY SUBMITTING A LETTER OF NOTIFICATION. THIS NOTE IS IN ACCORDANCE WITH THE CITY OF NY BULLETIN # 05-3/2013

THIS PROPERTY IS NOT LOCATED IN A SFHA PLAN.

BUILDING DEPARTMENT NOTE: "THIS PLAN IS APPROVED ONLY FOR WORK INDICATED ON THE APPLICATION SPECIFICATION SHEET. ALL OTHER MATTERS SHOWN ARE NOT TO BE RELIED UPON, OR TO BE CONSIDERED AS EITHER BEING APPROVED OR IN ACCORDANCE WITH APPLICABLE CODES".

ALTERATION OR RE-USE OF THIS DRAWING FOR OTHER THAN THIS PROJECT WITHOUT WRITTEN CONSENT OF THE ABOVE ENGINEER IS PROHIBITED BY LAW.

Client:
RANGER PROPERTIES
4790 BROADWAY
NEW YORK, NY 10034

Architect:
FOGARTY FINGER architecture | interiors
69 Walker St, New York, NY 10013
t 212 966 7450 f 212 966 7444

Library Architect:
Andrew Berman Architect, PLLC
77 Chambers Street, 4th Floor
New York, NY 10007
Tel 212.226.5998

Structural:
Thornton Tomasetti
51 Madison Avenue
New York, NY 10010
Tel 917.661.7800

MEP / FP:
Concessi Engineering, PC
499 7th Avenue, 11th Floor South Tower
New York, NY 10018
Tel 212.629.6810

FACADE:
SIMPSON GUMPERTZ & HEGER
550 7th Avenue, 10th Floor
New York, NY 10018
Tel 212.271.7000

CODE:
METROPOLIS
22 Courtland Street, 10th Floor
New York, NY 10007
Tel 212.233.6344

No.	Date	Issue
1	02/06/19	ISSUED FOR FILING / DD ESTIMATING

Project:
4790 BROADWAY
NEW YORK, NY 10034

Drawing Title:
SPRINKLER NOTES AND SCHEDULES

Seal & Signature:
STATE OF NEW YORK · ROBERT L. CONESSA · LICENSED PROFESSIONAL ENGINEER · NO. 86705

DATE (MM-DD-YY): 11-02-2018
PROJECT No.: 7815.00
DRAWING BY: DP
CHK BY: JV/RC
DWG. No.: SP-102.00
CADD FILE No.: –
02 OF 13

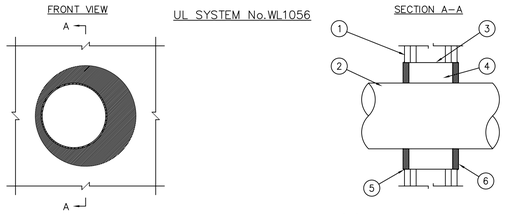

1. GYPSUM WALL ASSEMBLY (UL CLASSIFIED U300 OR U400 SERIES) (1–HR OR 2–HR FIRE RATING).
2. PENETRATING ITEM TO BE ONE OF THE FOLLOWING:
   A. MAXIMUM 12" NOMINAL DIAMETER STEEL PIPE (SCHEDULE 40 OR HEAVIER).
   B. MAXIMUM 12" NOMINAL DIAMETER CAST IRON PIPING
   C. MAXIMUM 4" NOMINAL DIAMETER COPPER PIPE.
3. MINIMUM 24 GAUGE SHEET METAL SLEEVE EXTENDING 1/2" PAST EACH SURFACE OF WALL.
4. MINIMUM 4–1/2" THICKNESS MINERAL WOOL (MIN. 4 PCF DENSITY) TIGHTLY PACKED.
5. A GENEROUS BEAD OF HILTI FS–ONE INTUMESCENT FIRESTOP SEALANT AROUND PERIMETER OF SLEEVE.
6. MINIMUM 3/4" DEPTH HILTI FS–ONE INTUMESCENT FIRESTOP SEALANT.

NOTE:
1. MAXIMUM DIAMETER OF OPENING = 18–3/4"
2. ANNULAR SPACE = MINIMUM 3/4", MAXIMUM 4–1/2"
3. OPENING SHALL BE 1–1/2" TO 6" LARGER THAN OUTSIDE DIAMETER OF PIPE.

FIRESTOPPING OF METAL PIPE THROUGH 1–HR OR 2–HR RATED GYPSUM WALL.

NOT TO SCALE

NOTE:

DETAIL IS BASED ON HILTI UL SYSTEM No. WL1056 OTHER MANUFACTURER WILL BE ACCEPTED. REFER TO SPECIFICATIONS

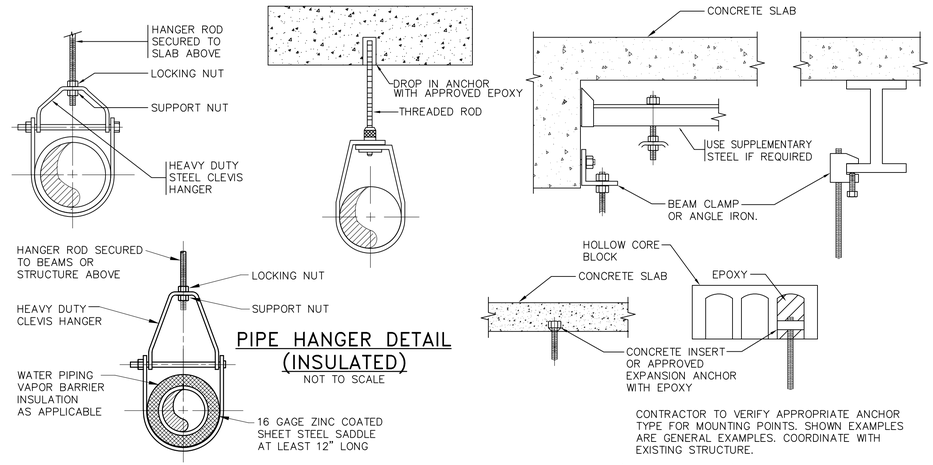

PIPE HANGER DETAIL (INSULATED)

NOT TO SCALE

SWIVEL RING HANGER DATA			
PIPE DIAMETER	ROD SIZE	MAX. ALLOWABLE SPACING	APPROVALS & LISTINGS
1"	3/8"	8 FT.	UL/FM
1–1/4"	3/8"	8 FT.	
1–1/2"	3/8"	8 FT.	
2"	3/8"	8 FT.	
2½"–3"	1/2"	10 FT	
4"	5/8"	10 FT	

NOTES:
1. ALL DAMAGED FIRE PROOFING AS RESULT OF HANGER INSTALLATION SHALL BE REPAIRED TO MATCH ADJACENT AREA BY THIS CONTRACTOR (TYP.)

PIPE HANGER DETAIL

NOT TO SCALE

PIPE HANGING DETAIL FOR WOOD JOISTS

NOT TO SCALE

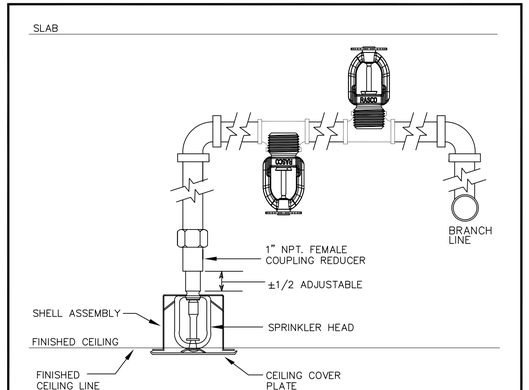

TYPICAL SPRINKLER HEAD BRANCH LINE CONNECTIONS

NOT TO SCALE

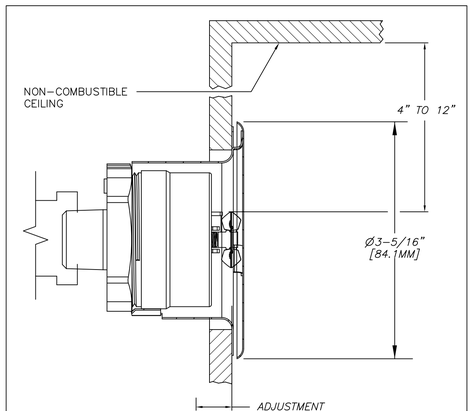

SIDEWALL SPRINKLER HEAD MODEL G6–56

NOT TO SCALE

BUILDING DEPARTMENT NOTE: "THIS PLAN IS APPROVED ONLY FOR WORK INDICATED ON THE APPLICATION SPECIFICATION SHEET. ALL OTHER MATTERS SHOWN ARE NOT TO BE RELIED UPON, OR TO BE CONSIDERED AS EITHER BEING APPROVED OR IN ACCORDANCE WITH APPLICABLE CODES".

ALTERATION OR RE–USE OF THIS DRAWING FOR OTHER THAN THIS PROJECT WITHOUT WRITTEN CONSENT OF THE ABOVE ENGINEER IS PROHIBITED BY LAW.

Client:

RANGER PROPERTIES
4790 BROADWAY
NEW YORK, NY 10034

Architect:

FOGARTY FINGER architecture | interiors
69 Walker St, New York, NY 10013
t 212 966 7450 f 212 966 7444

Library Architect:

Andrew Berman Architect, PLLC
77 Chambers Street, 4th Floor
New York, NY 10007
Tel 212.226.5998

Structural:

Thornton Tomasetti
51 Madison Avenue
New York, NY 10010
Tel 917.661.7800

MEP / FP:

Concessi Engineering, PC
499 7th Avenue, 11th Floor South Tower
New York, NY 10018
Tel 212.629.6810

FACADE:

SIMPSON GUMPERTZ & HEGER
550 7th Avenue, 10th Floor
New York, NY 10018
Tel 212.271.7000

CODE:

METROPOLIS
22 Courtland Street, 10th Floor
New York, NY 10007
Tel 212.233.6344

No.	Date	Issue
1	02/06/19	ISSUED FOR FILING / DD ESTIMATING

Project:

4790 BROADWAY
NEW YORK, NY 10034

Drawing Title:

SPRINKLER DETAILS

Seal & Signature:

STATE OF NEW YORK · ROBERT J. CONGDON · No. 086705 · LICENSED PROFESSIONAL ENGINEER

DATE (MM–DD–YY): 11–02–2018
PROJECT No.: 7815.00
DRAWING BY: DP
CHK BY: JV/RC
DWG. No.: SP–201.00
CADD FILE No.: –

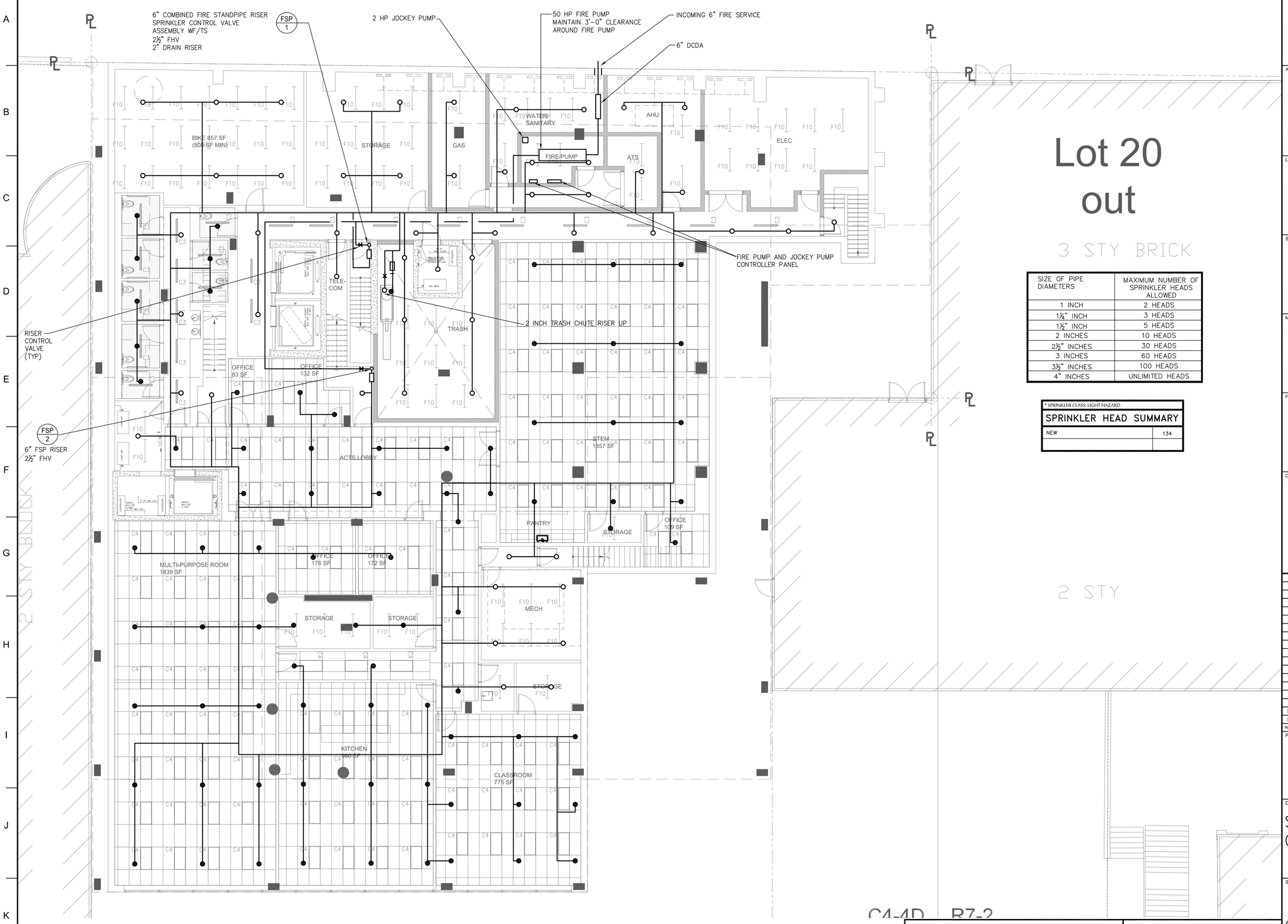

SIZE OF PIPE DIAMETERS	MAXIMUM NUMBER OF SPRINKLER HEADS ALLOWED
1 INCH	2 HEADS
1¼" INCH	3 HEADS
1½" INCH	5 HEADS
2 INCHES	10 HEADS
2½" INCHES	30 HEADS
3 INCHES	60 HEADS
3½" INCHES	100 HEADS
4" INCHES	UNLIMITED HEADS

* SPRINKLER CLASS: LIGHT HAZARD

SPRINKLER HEAD SUMMARY	
NEW	134

1 CELLAR FLOOR PLAN
SCALE: 1/8"=1'-0"

BUILDING DEPARTMENT NOTE: "THIS PLAN IS APPROVED ONLY FOR WORK INDICATED ON THE APPLICATION SPECIFICATION SHEET. ALL OTHER MATTERS SHOWN ARE NOT TO BE RELIED UPON, OR TO BE CONSIDERED AS EITHER BEING APPROVED OR IN ACCORDANCE WITH APPLICABLE CODES".

ALTERATION OR RE-USE OF THIS DRAWING FOR OTHER THAN THIS PROJECT WITHOUT WRITTEN CONSENT OF THE ABOVE ENGINEER IS PROHIBITED BY LAW.

Client:
RANGER PROPERTIES
4790 BROADWAY
NEW YORK, NY 10034

Architect:
FOGARTY FINGER
architecture | interiors
69 Walker St, New York, NY 10013
t 212 966 7450 f 212 966 7444

Library Architect:
Andrew Berman Architect, PLLC
77 Chambers Street, 4th Floor
New York, NY 10007
Tel 212.226.5998

Structural:
Thornton Tomasetti
51 Madison Avenue
New York, NY 10010
Tel 917.661.7800

MEP / FP:
Concessi Engineering, PC
499 7th Avenue, 11th Floor South Tower
New York, NY 10018
Tel 212.629.6810

FACADE:
SIMPSON GUMPERTZ & HEGER
550 7th Avenue, 10th Floor
New York, NY 10018
Tel 212.271.7000

CODE:
METROPOLIS
22 Courtland Street, 10th Floor
New York, NY 10007
Tel 212.233.6344

No.	Date	Issue
1	02/06/19	ISSUED FOR FILING / DD ESTIMATING
1	01/29/19	ISSUED FOR PROGRESS

Project:
4790 BROADWAY
NEW YORK, NY 10034

Drawing Title:
SPRINKLER
CELLAR FLOOR PLAN

Seal & Signature:
STATE OF NEW YORK · ROBERT J. CONCESSI · No. 86705 · LICENSED PROFESSIONAL ENGINEER

DATE (MM-DD-YY):	11-02-2018
PROJECT No.:	7815.00
DRAWING BY:	DP
CHK BY:	JV/RC
DWG. No.:	SP-301.00
CADD FILE No.:	04 OF 13

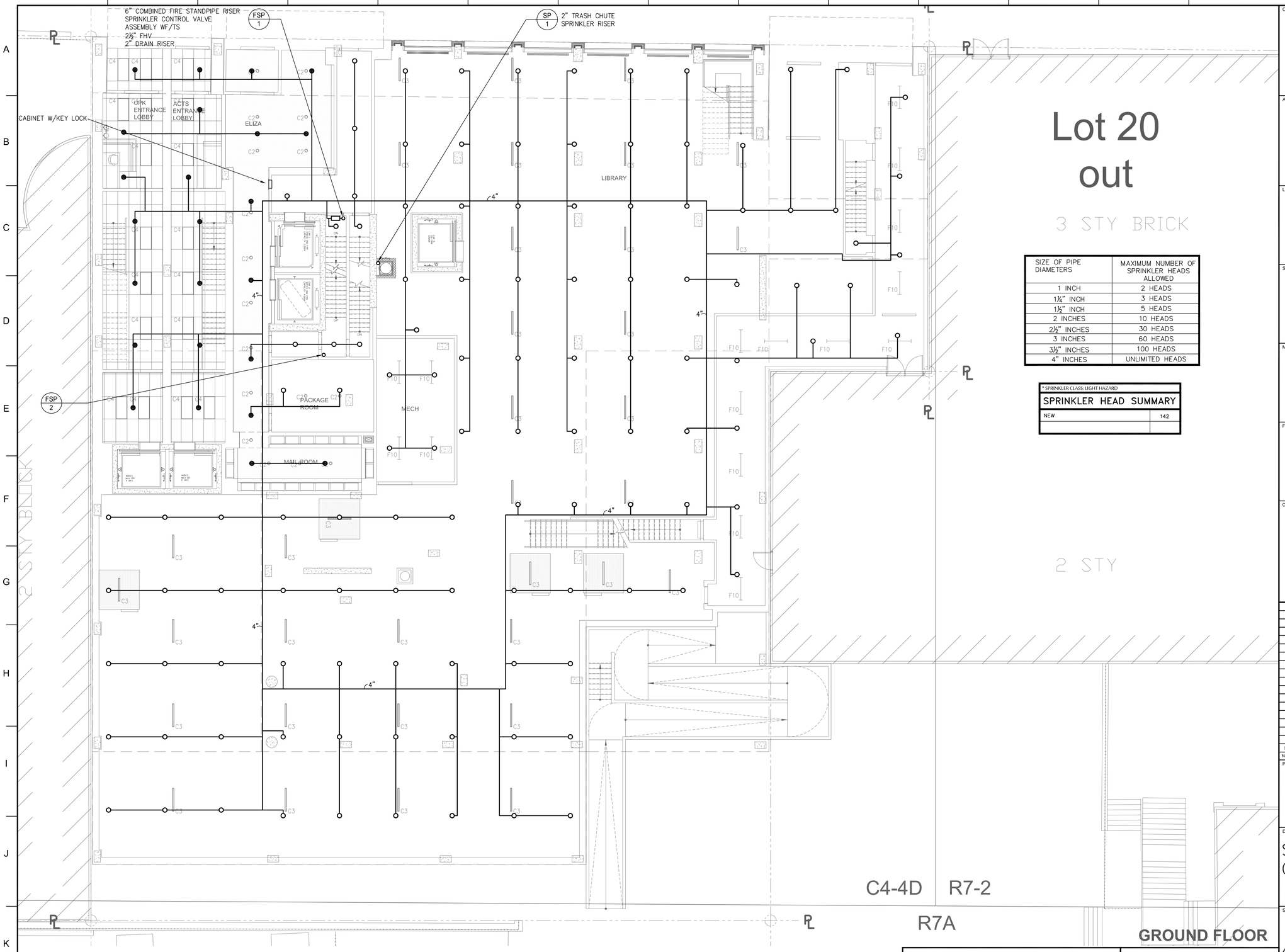

Lot 20 out

3 STY BRICK

SIZE OF PIPE DIAMETERS	MAXIMUM NUMBER OF SPRINKLER HEADS ALLOWED
1 INCH	2 HEADS
1¼" INCH	3 HEADS
1½" INCH	5 HEADS
2 INCHES	10 HEADS
2½" INCHES	30 HEADS
3 INCHES	60 HEADS
3½" INCHES	100 HEADS
4" INCHES	UNLIMITED HEADS

* SPRINKLER CLASS: LIGHT HAZARD

SPRINKLER HEAD SUMMARY	
NEW	142

1 GROUND FLOOR PLAN
SCALE: 1/8"=1'-0"

BUILDING DEPARTMENT NOTE: "THIS PLAN IS APPROVED ONLY FOR WORK INDICATED ON THE APPLICATION SPECIFICATION SHEET. ALL OTHER MATTERS SHOWN ARE NOT TO BE RELIED UPON, OR TO BE CONSIDERED AS EITHER BEING APPROVED OR IN ACCORDANCE WITH APPLICABLE CODES".

ALTERATION OR RE-USE OF THIS DRAWING FOR OTHER THAN THIS PROJECT WITHOUT WRITTEN CONSENT OF THE ABOVE ENGINEER IS PROHIBITED BY LAW.

Client:
RANGER PROPERTIES
4790 BROADWAY
NEW YORK, NY 10034

Architect:
FOGARTY FINGER architecture | interiors
69 Walker St, New York, NY 10013
t 212 966 7450 f 212 966 7444

Library Architect:
Andrew Berman Architect, PLLC
77 Chambers Street, 4th Floor
New York, NY 10007
Tel 212.226.5998

Structural:
Thornton Tomasetti
51 Madison Avenue
New York, NY 10010
Tel 917.661.7800

MEP / FP:
Concessi Engineering, PC
499 7th Avenue, 11th Floor South Tower
New York, NY 10018
Tel 212.629.6810

FACADE:
SIMPSON GUMPERTZ & HEGER
550 7th Avenue, 10th Floor
New York, NY 10018
Tel 212.271.7000

CODE:
METROPOLIS
22 Courtland Street, 10th Floor
New York, NY 10007
Tel 212.233.6344

No.	Date	Issue
1	02/06/19	ISSUED FOR FILING / DD ESTIMATING

Project:
4790 BROADWAY
NEW YORK, NY 10034

Drawing Title:
SPRINKLER
GROUND FLOOR PLAN

Seal & Signature:
STATE OF NEW YORK ROBERT L. CONCESSI No. 86705 LICENSED PROFESSIONAL ENGINEER

DATE (MM-DD-YY):	11-02-2018
PROJECT No.:	7815.00
DRAWING BY:	DP
CHK BY:	JV/RC
DWG. No.:	SP-302.00
CADD FILE No.:	–

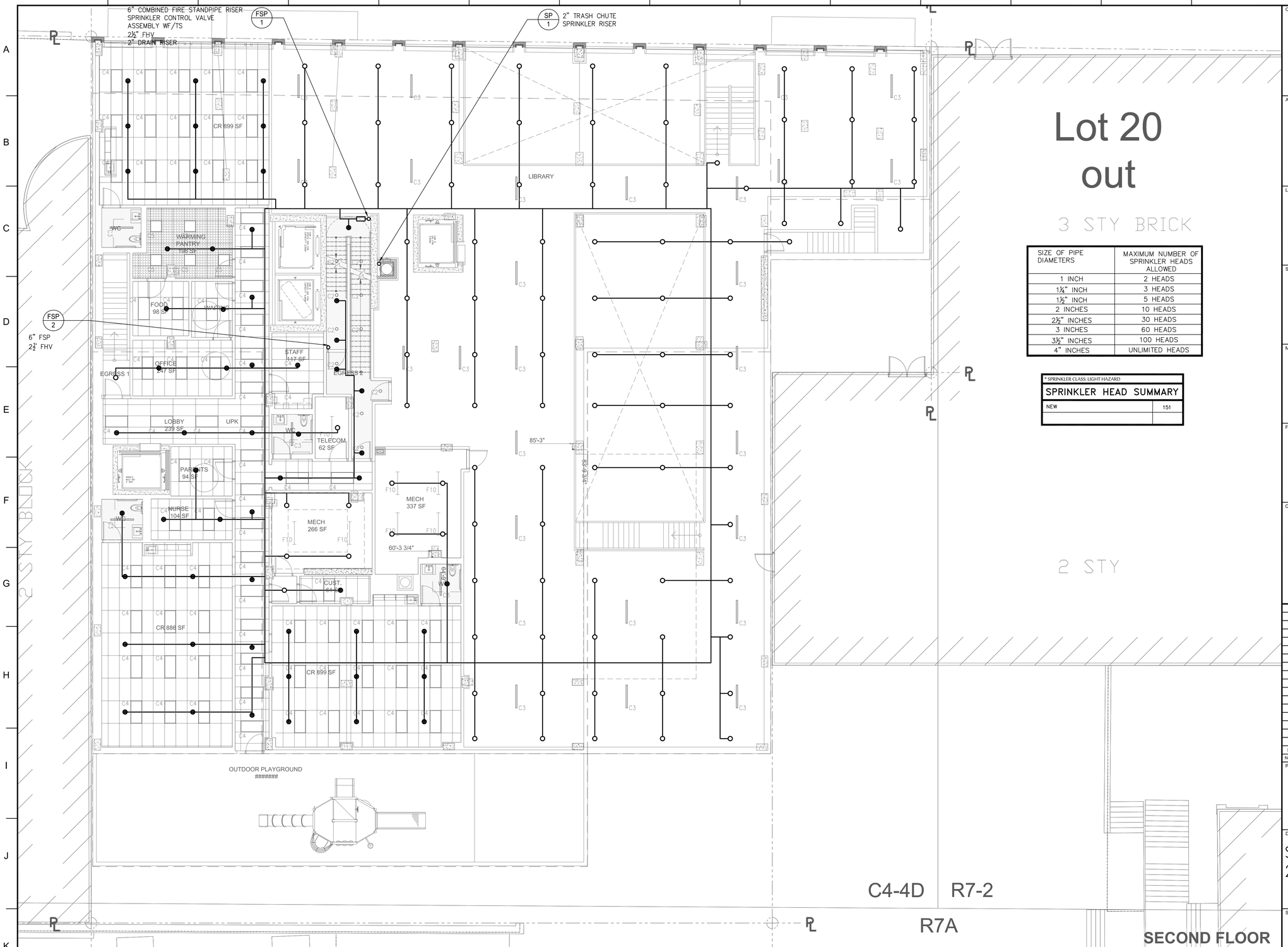

SIZE OF PIPE DIAMETERS	MAXIMUM NUMBER OF SPRINKLER HEADS ALLOWED
1 INCH	2 HEADS
1¼" INCH	3 HEADS
1½" INCH	5 HEADS
2 INCHES	10 HEADS
2½" INCHES	30 HEADS
3 INCHES	60 HEADS
3½" INCHES	100 HEADS
4" INCHES	UNLIMITED HEADS

* SPRINKLER CLASS: LIGHT HAZARD

SPRINKLER HEAD SUMMARY	
NEW	151

1 2ND FLOOR PLAN
SCALE: 1/8"=1'-0"

BUILDING DEPARTMENT NOTE: "THIS PLAN IS APPROVED ONLY FOR WORK INDICATED ON THE APPLICATION SPECIFICATION SHEET. ALL OTHER MATTERS SHOWN ARE NOT TO BE RELIED UPON, OR TO BE CONSIDERED AS EITHER BEING APPROVED OR IN ACCORDANCE WITH APPLICABLE CODES".

ALTERATION OR RE-USE OF THIS DRAWING FOR OTHER THAN THIS PROJECT WITHOUT WRITTEN CONSENT OF THE ABOVE ENGINEER IS PROHIBITED BY LAW.

Client:
RANGER PROPERTIES
4790 BROADWAY
NEW YORK, NY 10034

Architect:
FOGARTY FINGER
architecture | interiors
69 Walker St, New York, NY 10013
t 212 966 7450 f 212 966 7444

Library Architect:
Andrew Berman Architect, PLLC
77 Chambers Street, 4th Floor
New York, NY 10007
Tel 212.226.5998

Structural:
Thornton Tomasetti
51 Madison Avenue
New York, NY 10010
Tel 917.661.7800

MEP / FP:
Concessi Engineering, PC
499 7th Avenue, 11th Floor South Tower
New York, NY 10018
Tel 212.629.6810

FACADE:
SIMPSON GUMPERTZ & HEGER
550 7th Avenue, 10th Floor
New York, NY 10018
Tel 212.271.7000

CODE:
METROPOLIS
22 Courtland Street, 10th Floor
New York, NY 10007
Tel 212.233.6344

No.	Date	Issue
1	02/06/19	ISSUED FOR FILING / DD ESTIMATING

Project:
4790 BROADWAY
NEW YORK, NY 10034

Drawing Title:
SPRINKLER
2ND FLOOR PLAN

Seal & Signature:
STATE OF NEW YORK · ROBERT V. CONCESSI · No. 86705 · LICENSED PROFESSIONAL ENGINEER

DATE (MM-DD-YY):	11-02-2018
PROJECT No.:	7815.00
DRAWING BY:	DP
CHK BY:	JV/RC
DWG. No.:	SP-303.00
CADD FILE No.:	–
	06 OF 13

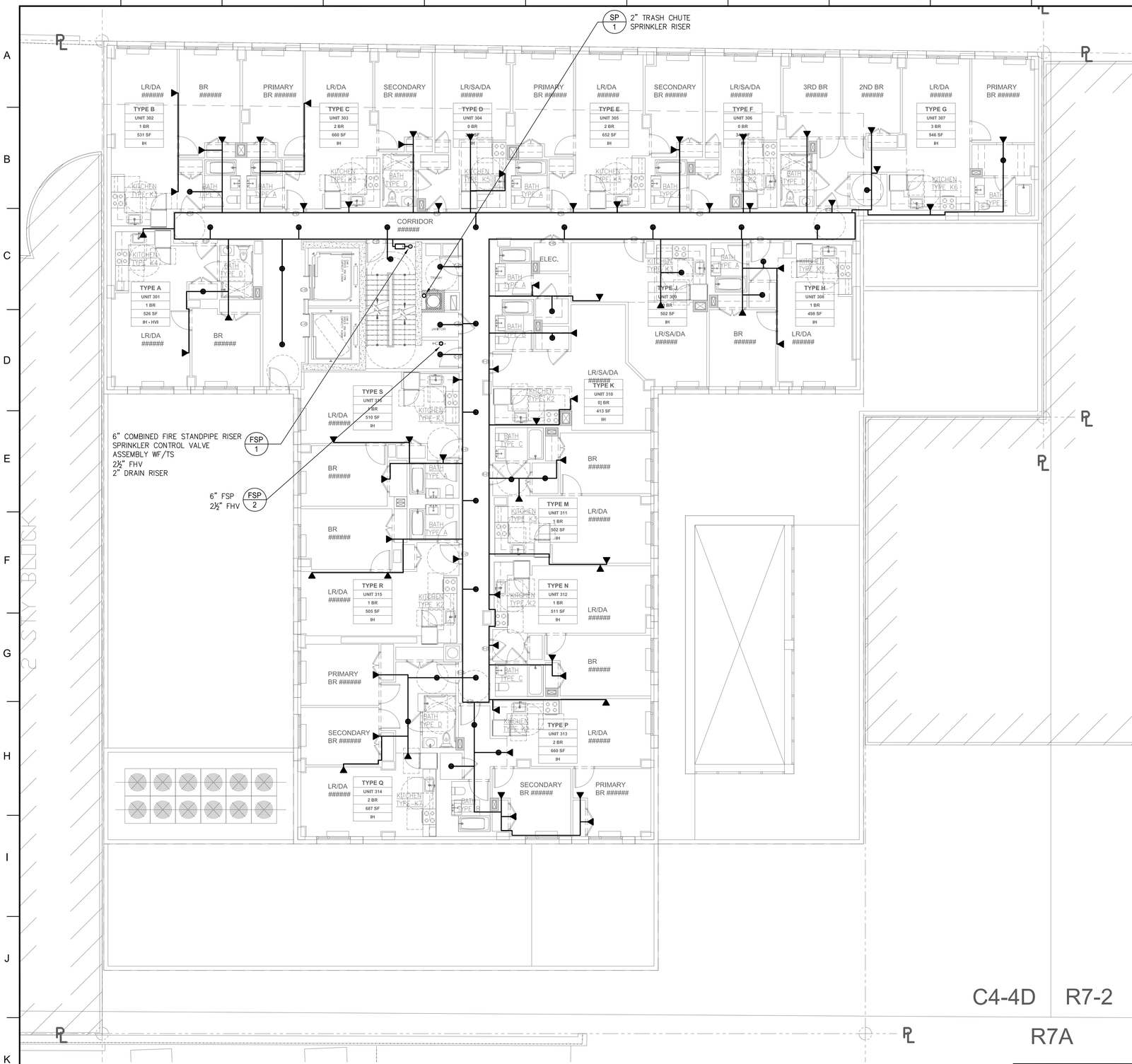

SIZE OF PIPE DIAMETERS	MAXIMUM NUMBER OF SPRINKLER HEADS ALLOWED
1 INCH	2 HEADS
1¼" INCH	3 HEADS
1½" INCH	5 HEADS
2 INCHES	10 HEADS
2½" INCHES	30 HEADS
3 INCHES	60 HEADS
3½" INCHES	100 HEADS
4" INCHES	UNLIMITED HEADS

* SPRINKLER CLASS: LIGHT HAZARD

SPRINKLER HEAD SUMMARY	
NEW	94

1 3RD FLOOR PLAN
SCALE: 1/8"=1'-0"

BUILDING DEPARTMENT NOTE: "THIS PLAN IS APPROVED ONLY FOR WORK INDICATED ON THE APPLICATION SPECIFICATION SHEET. ALL OTHER MATTERS SHOWN ARE NOT TO BE RELIED UPON, OR TO BE CONSIDERED AS EITHER BEING APPROVED OR IN ACCORDANCE WITH APPLICABLE CODES".

ALTERATION OR RE-USE OF THIS DRAWING FOR OTHER THAN THIS PROJECT WITHOUT WRITTEN CONSENT OF THE ABOVE ENGINEER IS PROHIBITED BY LAW.

Client:
RANGER PROPERTIES
4790 BROADWAY
NEW YORK, NY 10034

Architect:
FOGARTY FINGER architecture | interiors
69 Walker St, New York, NY 10013
t 212 966 7450 f 212 966 7444

Library Architect:
Andrew Berman Architect, PLLC
77 Chambers Street, 4th Floor
New York, NY 10007
Tel 212.226.5998

Structural:
Thornton Tomasetti
51 Madison Avenue
New York, NY 10010
Tel 917.661.7800

MEP / FP:
Concessi Engineering, PC
499 7th Avenue, 11th Floor South Tower
New York, NY 10018
Tel 212.629.6810

FACADE:
SIMPSON GUMPERTZ & HEGER
550 7th Avenue, 10th Floor
New York, NY 10018
Tel 212.271.7000

CODE:
METROPOLIS
22 Courtland Street, 10th Floor
New York, NY 10007
Tel 212.233.6344

No.	Date	Issue
2	02/06/19	ISSUED FOR FILING / DD ESTIMATING
1	01/29/19	ISSUED FOR PROGRESS

Project:
4790 BROADWAY
NEW YORK, NY 10034

Drawing Title:
SPRINKLER
3RD FLOOR PLAN

Seal & Signature:
STATE OF NEW YORK · ROBERT V. CONESSA · No. 86705 · LICENSED PROFESSIONAL ENGINEER

DATE (MM-DD-YY): 11-02-2018
PROJECT No.: 7815.00
DRAWING BY: DP
CHK BY: JV/RC
DWG. No.: SP-304.00
CADD FILE No.: –
07 OF 13

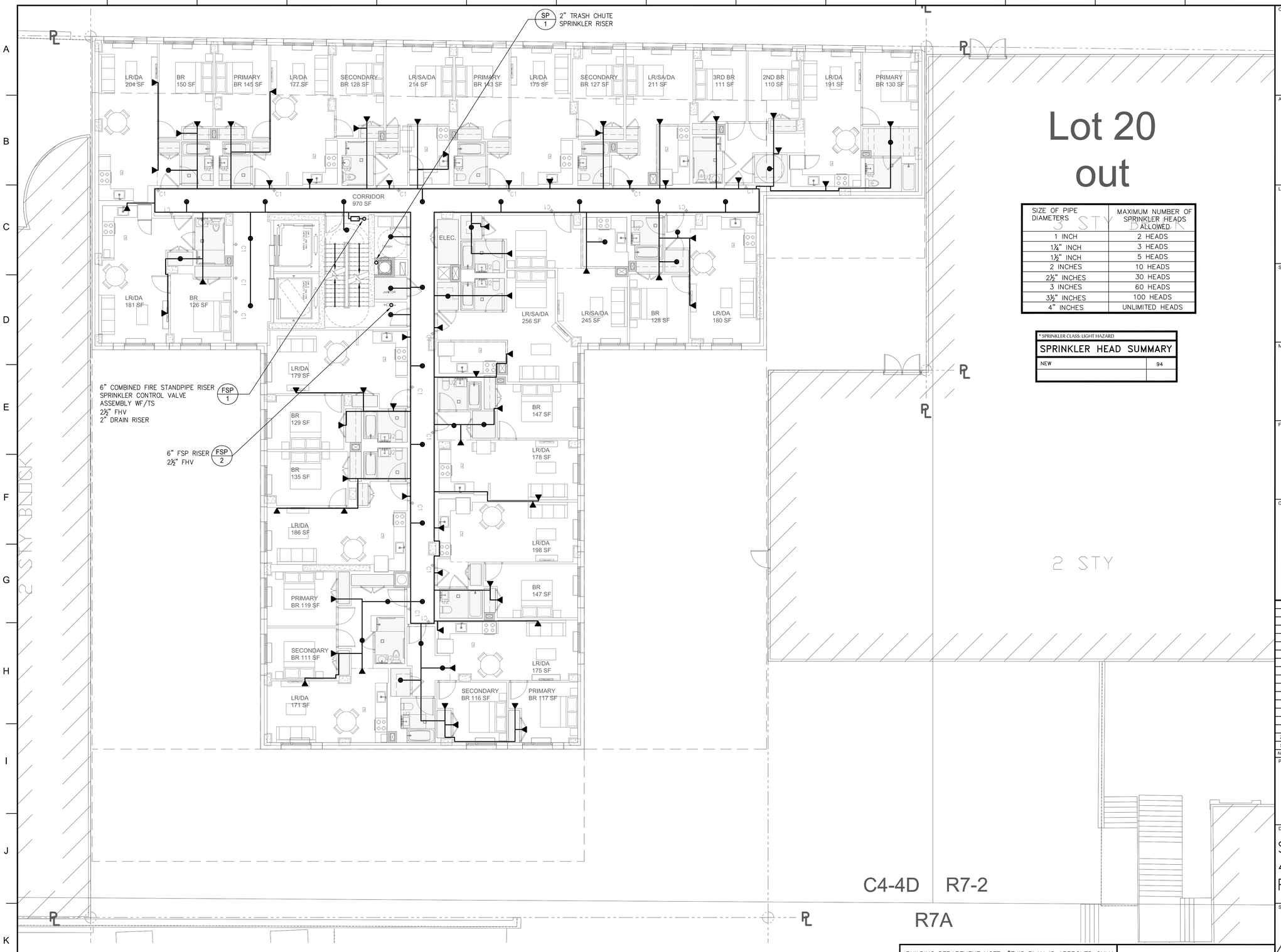

Lot 20 out

SIZE OF PIPE DIAMETERS	MAXIMUM NUMBER OF SPRINKLER HEADS ALLOWED
1 INCH	2 HEADS
1¼" INCH	3 HEADS
1½" INCH	5 HEADS
2 INCHES	10 HEADS
2½" INCHES	30 HEADS
3 INCHES	60 HEADS
3½" INCHES	100 HEADS
4" INCHES	UNLIMITED HEADS

* SPRINKLER CLASS: LIGHT HAZARD

SPRINKLER HEAD SUMMARY	
NEW	94

1 4TH - 10TH FLOOR PLAN
SCALE: 1/8"=1'-0"

BUILDING DEPARTMENT NOTE: "THIS PLAN IS APPROVED ONLY FOR WORK INDICATED ON THE APPLICATION SPECIFICATION SHEET. ALL OTHER MATTERS SHOWN ARE NOT TO BE RELIED UPON, OR TO BE CONSIDERED AS EITHER BEING APPROVED OR IN ACCORDANCE WITH APPLICABLE CODES".

ALTERATION OR RE-USE OF THIS DRAWING FOR OTHER THAN THIS PROJECT WITHOUT WRITTEN CONSENT OF THE ABOVE ENGINEER IS PROHIBITED BY LAW.

Client:
RANGER PROPERTIES
4790 BROADWAY
NEW YORK, NY 10034

Architect:
FOGARTY FINGER architecture | interiors
69 Walker St, New York, NY 10013
t 212 966 7450 f 212 966 7444

Library Architect:
Andrew Berman Architect, PLLC
77 Chambers Street, 4th Floor
New York, NY 10007
Tel 212.226.5998

Structural:
Thornton Tomasetti
51 Madison Avenue
New York, NY 10010
Tel 917.661.7800

MEP / FP:
Concessi Engineering, PC
499 7th Avenue, 11th Floor South Tower
New York, NY 10018
Tel 212.629.6810

FACADE:
SIMPSON GUMPERTZ & HEGER
550 7th Avenue, 10th Floor
New York, NY 10018
Tel 212.271.7000

CODE:
METROPOLIS
22 Courtland Street, 10th Floor
New York, NY 10007
Tel 212.233.6344

No.	Date	Issue
2	02/06/19	ISSUED FOR FILING / DD ESTIMATING
1	01/29/19	ISSUED FOR PROGRESS

Project:
4790 BROADWAY
NEW YORK, NY 10034

Drawing Title:
SPRINKLER
4TH THRU 10TH
FLOOR PLAN

Seal & Signature:
STATE OF NEW YORK ROBERT L. CONCESSI No. 86705 LICENSED PROFESSIONAL ENGINEER

DATE (MM-DD-YY):	11-02-2018
PROJECT No.:	7815.00
DRAWING BY:	DP
CHK BY:	JV/RC
DWG. No.:	SP-305.00
CADD FILE No.:	–

08 OF 13

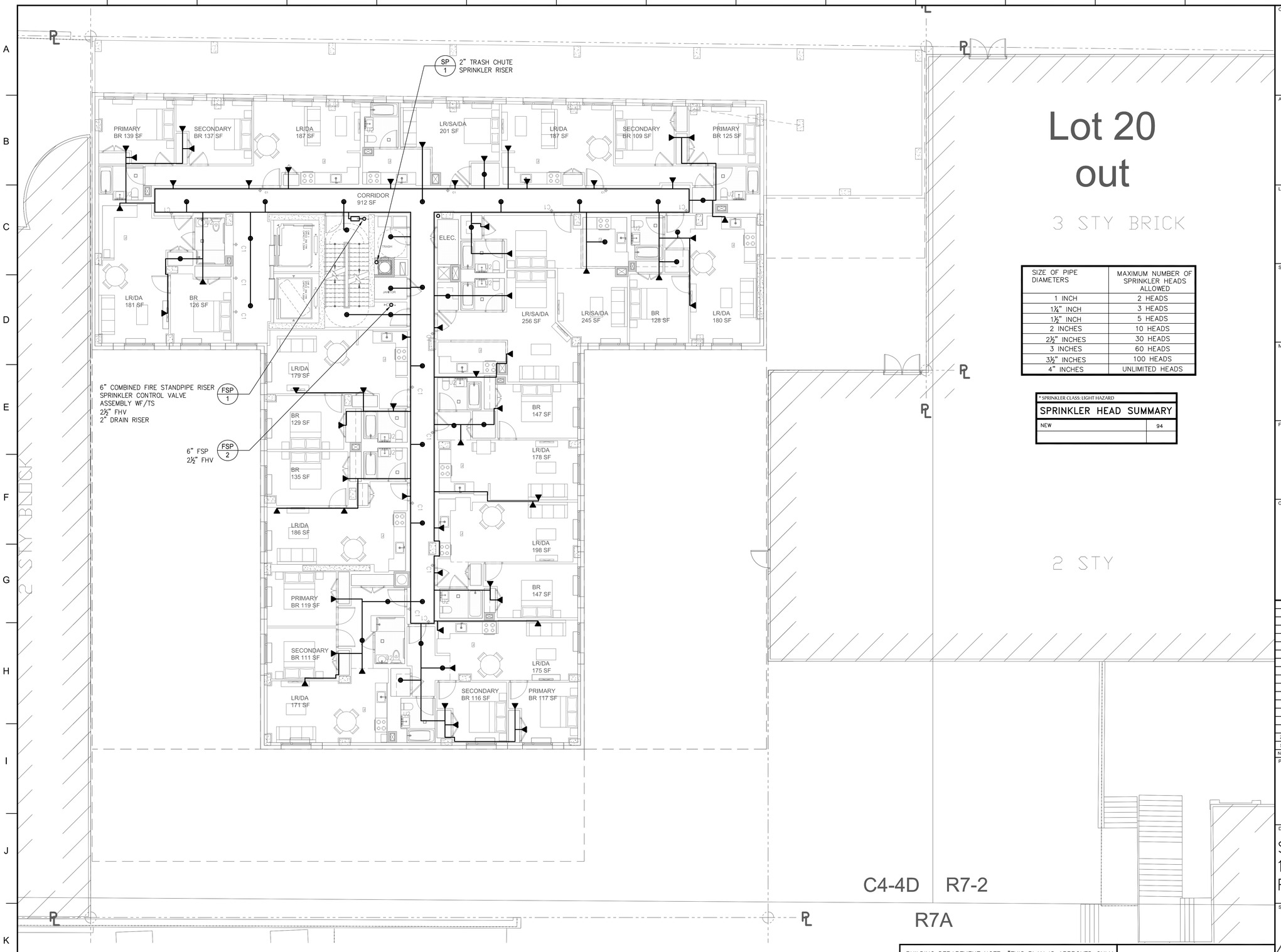

SIZE OF PIPE DIAMETERS	MAXIMUM NUMBER OF SPRINKLER HEADS ALLOWED
1 INCH	2 HEADS
1¼" INCH	3 HEADS
1½" INCH	5 HEADS
2 INCHES	10 HEADS
2½" INCHES	30 HEADS
3 INCHES	60 HEADS
3½" INCHES	100 HEADS
4" INCHES	UNLIMITED HEADS

* SPRINKLER CLASS: LIGHT HAZARD

SPRINKLER HEAD SUMMARY	
NEW	94

1 11TH - 13TH FLOOR PLAN
SCALE: 1/8"=1'-0"

BUILDING DEPARTMENT NOTE: "THIS PLAN IS APPROVED ONLY FOR WORK INDICATED ON THE APPLICATION SPECIFICATION SHEET. ALL OTHER MATTERS SHOWN ARE NOT TO BE RELIED UPON, OR TO BE CONSIDERED AS EITHER BEING APPROVED OR IN ACCORDANCE WITH APPLICABLE CODES".

ALTERATION OR RE-USE OF THIS DRAWING FOR OTHER THAN THIS PROJECT WITHOUT WRITTEN CONSENT OF THE ABOVE ENGINEER IS PROHIBITED BY LAW.

Client:
RANGER PROPERTIES
4790 BROADWAY
NEW YORK, NY 10034

Architect:
FOGARTY FINGER architecture | interiors
69 Walker St, New York, NY 10013
t 212 966 7450 f 212 966 7444

Library Architect:
Andrew Berman Architect, PLLC
77 Chambers Street, 4th Floor
New York, NY 10007
Tel 212.226.5998

Structural:
Thornton Tomasetti
51 Madison Avenue
New York, NY 10010
Tel 917.661.7800

MEP / FP:
Concessi Engineering, PC
499 7th Avenue, 11th Floor South Tower
New York, NY 10018
Tel 212.629.6810

FACADE:
SIMPSON GUMPERTZ & HEGER
550 7th Avenue, 10th Floor
New York, NY 10018
Tel 212.271.7000

CODE:
METROPOLIS
22 Courtland Street, 10th Floor
New York, NY 10007
Tel 212.233.6344

No.	Date	Issue
2	02/06/19	ISSUED FOR FILING / DD ESTIMATING
1	01/29/19	ISSUED FOR PROGRESS

Project:
4790 BROADWAY
NEW YORK, NY 10034

Drawing Title:
SPRINKLER
11TH THRU 13TH
FLOOR PLAN

Seal & Signature:
STATE OF NEW YORK ROBERT L. CONCESSI No. 86705 LICENSED PROFESSIONAL ENGINEER

DATE (MM-DD-YY): 11-02-2018
PROJECT No.: 7815.00
DRAWING BY: DP
CHK BY: JV/RC
DWG. No.: SP-306.00
CADD FILE No.: –
09 OF 13

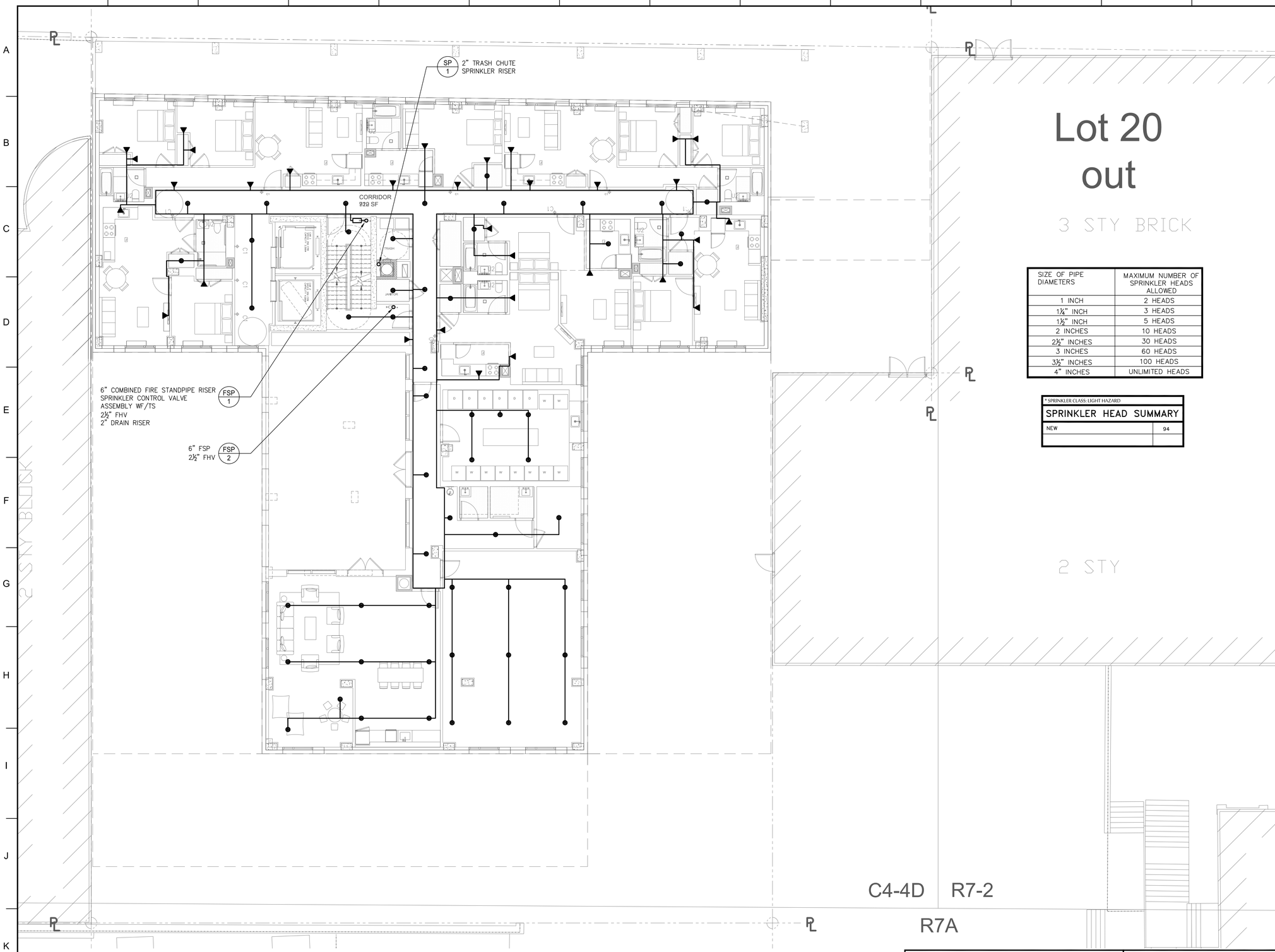

SIZE OF PIPE DIAMETERS	MAXIMUM NUMBER OF SPRINKLER HEADS ALLOWED
1 INCH	2 HEADS
1¼" INCH	3 HEADS
1½" INCH	5 HEADS
2 INCHES	10 HEADS
2½" INCHES	30 HEADS
3 INCHES	60 HEADS
3½" INCHES	100 HEADS
4" INCHES	UNLIMITED HEADS

* SPRINKLER CLASS: LIGHT HAZARD

SPRINKLER HEAD SUMMARY	
NEW	94

1 14TH FLOOR PLAN
SCALE: 1/8"=1'-0"

BUILDING DEPARTMENT NOTE: "THIS PLAN IS APPROVED ONLY FOR WORK INDICATED ON THE APPLICATION SPECIFICATION SHEET. ALL OTHER MATTERS SHOWN ARE NOT TO BE RELIED UPON, OR TO BE CONSIDERED AS EITHER BEING APPROVED OR IN ACCORDANCE WITH APPLICABLE CODES".

ALTERATION OR RE-USE OF THIS DRAWING FOR OTHER THAN THIS PROJECT WITHOUT WRITTEN CONSENT OF THE ABOVE ENGINEER IS PROHIBITED BY LAW.

Client:
RANGER PROPERTIES
4790 BROADWAY
NEW YORK, NY 10034

Architect:
FOGARTY FINGER
architecture | interiors
69 Walker St, New York, NY 10013
t 212 966 7450 f 212 966 7444

Library Architect:
Andrew Berman Architect, PLLC
77 Chambers Street, 4th Floor
New York, NY 10007
Tel 212.226.5998

Structural:
Thornton Tomasetti
51 Madison Avenue
New York, NY 10010
Tel 917.661.7800

MEP / FP:
Concessi Engineering, PC
499 7th Avenue, 11th Floor South Tower
New York, NY 10018
Tel 212.629.6810

FACADE:
SIMPSON GUMPERTZ & HEGER
550 7th Avenue, 10th Floor
New York, NY 10018
Tel 212.271.7000

CODE:
METROPOLIS
22 Courtland Street, 10th Floor
New York, NY 10007
Tel 212.233.6344

No.	Date	Issue
2	02/06/19	ISSUED FOR FILING / DD ESTIMATING
1	01/29/19	ISSUED FOR PROGRESS

Project:
4790 BROADWAY
NEW YORK, NY 10034

Drawing Title:
SPRINKLER
14TH FLOOR PLAN

Seal & Signature:
STATE OF NEW YORK · ROBERT V. CONCESSI · LICENSED PROFESSIONAL ENGINEER · No. 067095

DATE (MM-DD-YY): 11-02-2018
PROJECT No.: 7815.00
DRAWING BY: DP
CHK BY: JV/RC
DWG. No.: SP-307.00
CADD FILE No.: –
11 OF 13

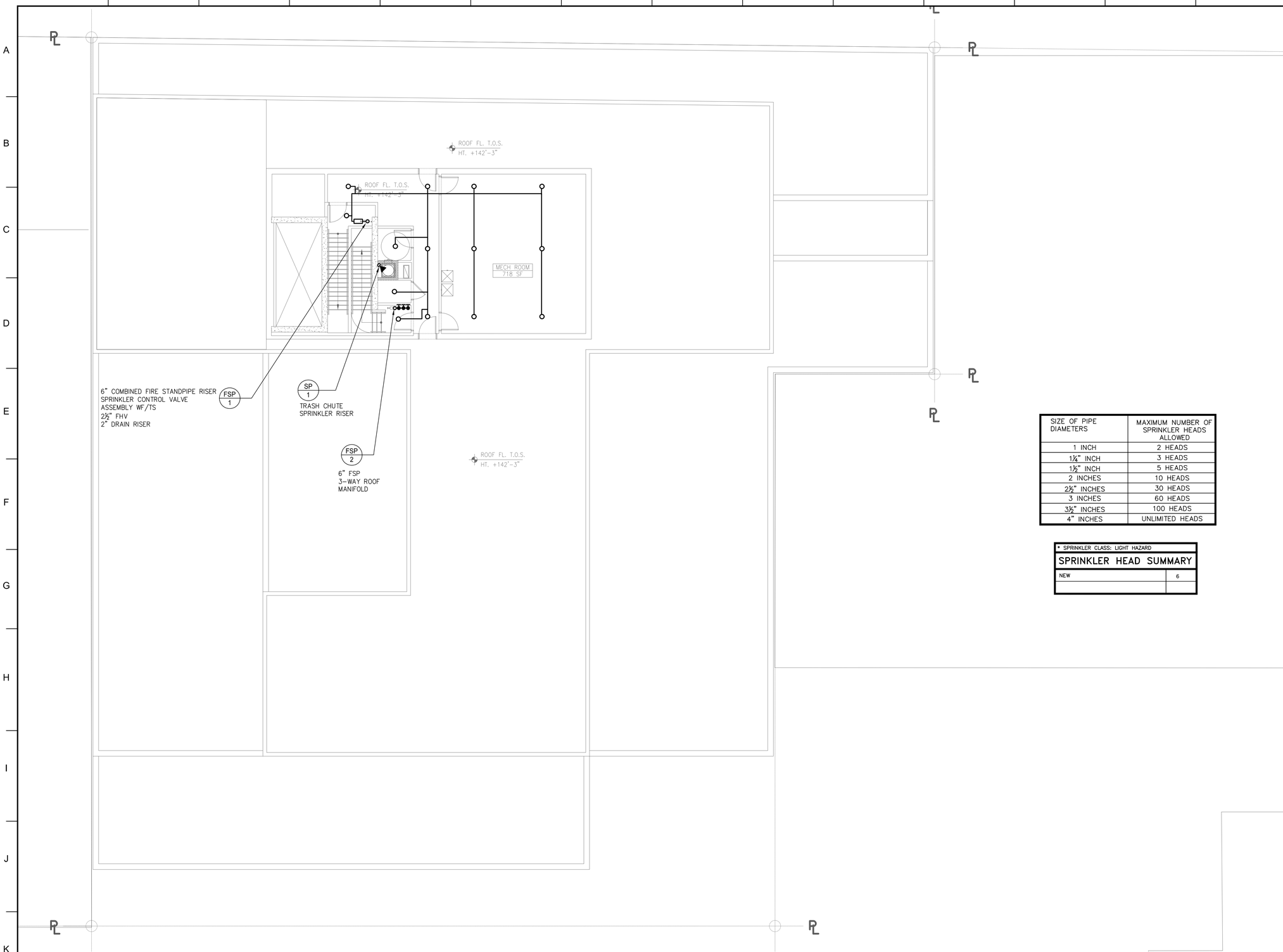

1 BULKHEAD PLAN
SCALE: 1/8"=1'-0"

SIZE OF PIPE DIAMETERS	MAXIMUM NUMBER OF SPRINKLER HEADS ALLOWED
1 INCH	2 HEADS
1¼" INCH	3 HEADS
1½" INCH	5 HEADS
2 INCHES	10 HEADS
2½" INCHES	30 HEADS
3 INCHES	60 HEADS
3½" INCHES	100 HEADS
4" INCHES	UNLIMITED HEADS

* SPRINKLER CLASS: LIGHT HAZARD

SPRINKLER HEAD SUMMARY	
NEW	6

BUILDING DEPARTMENT NOTE: "THIS PLAN IS APPROVED ONLY FOR WORK INDICATED ON THE APPLICATION SPECIFICATION SHEET. ALL OTHER MATTERS SHOWN ARE NOT TO BE RELIED UPON, OR TO BE CONSIDERED AS EITHER BEING APPROVED OR IN ACCORDANCE WITH APPLICABLE CODES".

ALTERATION OR RE-USE OF THIS DRAWING FOR OTHER THAN THIS PROJECT WITHOUT WRITTEN CONSENT OF THE ABOVE ENGINEER IS PROHIBITED BY LAW.

Client:

RANGER PROPERTIES
4790 BROADWAY
NEW YORK, NY 10034

Architect:

FOGARTY FINGER
architecture | interiors

69 Walker St, New York, NY 10013
t 212 966 7450 f 212 966 7444

Library Architect:

Andrew Berman Architect, PLLC
77 Chambers Street, 4th Floor
New York, NY 10007
Tel 212.226.5998

Structural:

Thornton Tomasetti
51 Madison Avenue
New York, NY 10010
Tel 917.661.7800

MEP / FP:

Concessi Engineering, PC
499 7th Avenue, 11th Floor South Tower
New York, NY 10018
Tel 212.629.6810

FACADE:

SIMPSON GUMPERTZ & HEGER
550 7th Avenue, 10th Floor
New York, NY 10018
Tel 212.271.7000

CODE:

METROPOLIS
22 Courtland Street, 10th Floor
New York, NY 10007
Tel 212.233.6344

No.	Date	Issue
1	02/06/19	ISSUED FOR FILING / DD ESTIMATING

Project:

4790 BROADWAY
NEW YORK, NY 10034

Drawing Title:

SPRINKLER
BULKHEAD PLAN

Seal & Signature:

STATE OF NEW YORK · ROBERT V. CONCESSI · No. 085705 · LICENSED PROFESSIONAL ENGINEER

DATE (MM-DD-YY): 11-02-2018
PROJECT No.: 7815.00
DRAWING BY: DP
CHK BY: JV/RC
DWG. No.: SP-308.00
CADD FILE No.: –

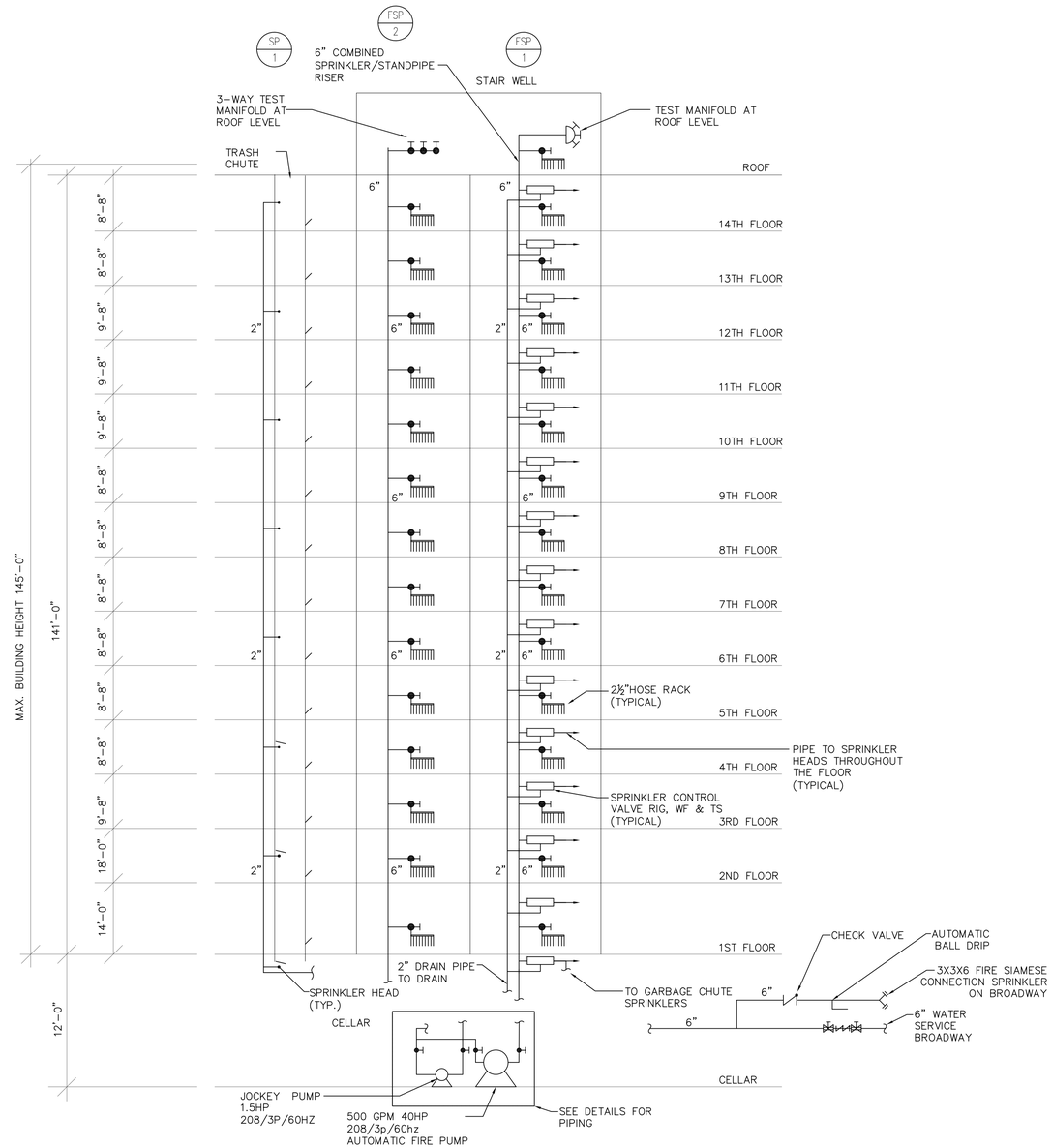

SPRINKLER/FIRE STANDPIPE RISER

N.T.S.

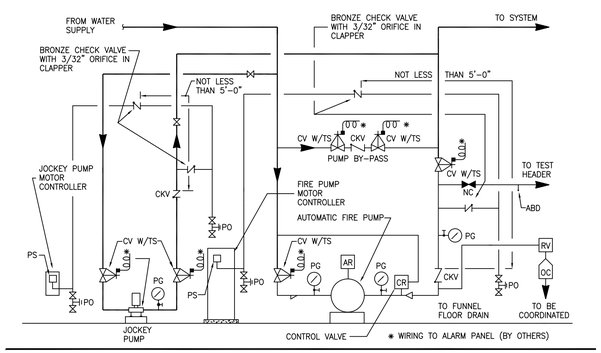

FIRE AND JOCKEY PUMP SCHEMATIC

NOT TO SCALE

BUILDING DEPARTMENT NOTE: "THIS PLAN IS APPROVED ONLY FOR WORK INDICATED ON THE APPLICATION SPECIFICATION SHEET. ALL OTHER MATTERS SHOWN ARE NOT TO BE RELIED UPON, OR TO BE CONSIDERED AS EITHER BEING APPROVED OR IN ACCORDANCE WITH APPLICABLE CODES".

ALTERATION OR RE-USE OF THIS DRAWING FOR OTHER THAN THIS PROJECT WITHOUT WRITTEN CONSENT OF THE ABOVE ENGINEER IS PROHIBITED BY LAW.

Client:

RANGER PROPERTIES
4790 BROADWAY
NEW YORK, NY 10034

Architect:

FOGARTY FINGER architecture | interiors
69 Walker St, New York, NY 10013
t 212 966 7450 f 212 966 7444

Library Architect:

Andrew Berman Architect, PLLC
77 Chambers Street, 4th Floor
New York, NY 10007
Tel 212.226.5998

Structural:

Thornton Tomasetti
51 Madison Avenue
New York, NY 10010
Tel 917.661.7800

MEP / FP:

Concessi Engineering, PC
499 7th Avenue, 11th Floor South Tower
New York, NY 10018
Tel 212.629.6810

FACADE:

SIMPSON GUMPERTZ & HEGER
550 7th Avenue, 10th Floor
New York, NY 10018
Tel 212.271.7000

CODE:

METROPOLIS
22 Courtland Street, 10th Floor
New York, NY 10007
Tel 212.233.6344

No.	Date	Issue
2	02/06/19	ISSUED FOR FILING / DD ESTIMATING
1	01/29/19	ISSUED FOR PROGRESS

Project:

4790 BROADWAY
NEW YORK, NY 10034

Drawing Title:

SPRINKLER/FSP RISER DIAGRAM

Seal & Signature:

STATE OF NEW YORK · ROBERT L. CONESSI · LICENSED PROFESSIONAL ENGINEER · No. 86705

DATE (MM-DD-YY):	11-02-2018
PROJECT No.:	7815.00
DRAWING BY:	DP
CHK BY:	JV/RC
DWG. No.:	SP-401.00
CADD FILE No.:	–

SYMBOL LIST

- F — STROBE/HORN COMBO 15/110 DBA CAT# GE GENESIS SERIES#G1-RF-HDVM
- MM — MONITORING MODULE
- PS — PRESSURE SWITCH

STANDPIPE AIR PRESSURED ALARM SYSTEM NOTES:

1. WORK FOR STANDPIPE AIR PRESSURED ALARM SYSTEM SHALL COMPLY WITH THE LATEST ISSUE OF THE NEW YORK CITY BUILDING CODE NYC ELECTRICAL CODE, NATIONAL FIRE PROTECTION AGENCIES AND THE STANDARDS OR REGULATIONS OF ALL AGENCIES HAVING JURISDICTION.
2. WIRING SHALL BE MINIMUM #12 IN MINIMUM ¾" CONDUIT WHERE REQUIRED BY CODE OR WHERE IT NIGHT INCUR DAMAGE. WIRING SHALL BE TEFLON COATED WHERE REQUIRED BY CODE.
3. ELECTRICAL CONTRACTOR SHALL TEST AND ADJUST THE INSTALLED WORK FOR ITS PROPER FUNCTIONING UNDER THE SUPERVISION OF MANUFACTURER'S REPRESENTATIVE.
4. SEQUENCE OF OPERATION:
   THE FIRE ALARM SYSTEM SHALL BE OF AN NEW YORK CITY BUILDING CODE, LOCAL LAWS, AND NEW YORK CITY FIRE DEPARTMENT REQUIREMENTS AND BE APPROVED.
5. ACTIVATIONS HIGH/LOW PRESSURE SWITCH SHALL:
   A. TRANSMIT A SIGNAL TO CENTRAL STATION.
   B. ACTIVATE THE STROBE/HORN COMBO AT THE ALARM.

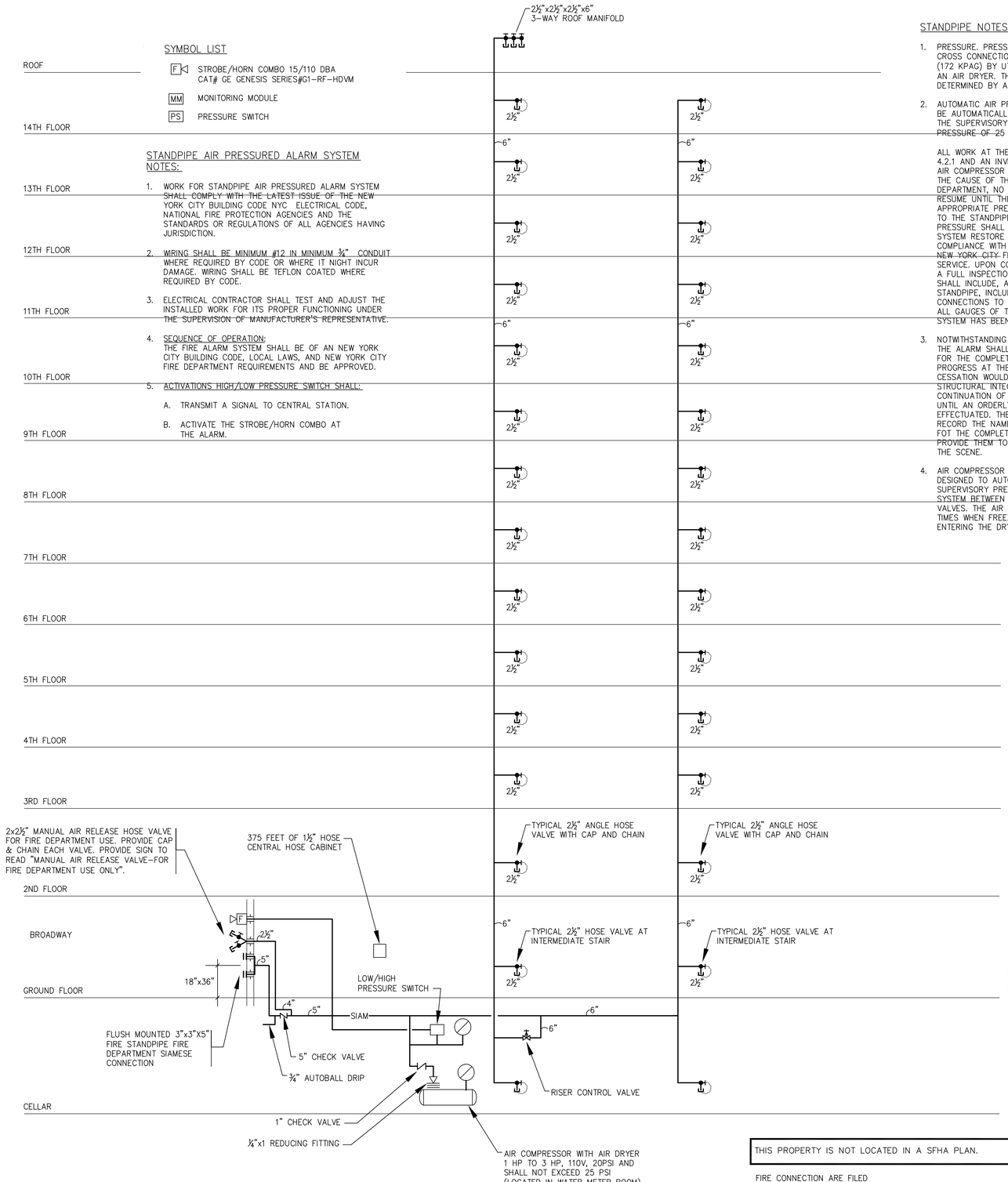

TEMPORARY DRY FIRE STANDPIPE RISER DIAGRAM

N.T.S.

STANDPIPE NOTES

1. PRESSURE. PRESSURE SHALL BE MAINTAINED IN THE STANDPIPE AND CROSS CONNECTIONS AT ALL TIMES AND SHALL NOT EXCEED 25 PSIG (172 KPAG) BY UTILIZING NITROGEN OR AN AIR COMPRESSION WITH AN AIR DRYER. THE SUPERVISORY PRESSURE SHALL BE AS DETERMINED BY A REGISTERED DESIGN PROFESSIONAL.
2. AUTOMATIC AIR PRESSURIZED ALARM ACTIVATION. THE ALARM SHALL BE AUTOMATICALLY ACTIVATED WHEN THE PRESSURE DROPS BELOW THE SUPERVISORY PRESSURE OR RISES ABOVE THE MAXIMUM PRESSURE OF 25 PSIG (172 KPAG). WHEN THE ALARM IS ACTIVATED.

   ALL WORK AT THE SITE SHALL CEASE, EXCEPT AS PROVIDED IN ITEM 4.2.1 AND AN INVESTIGATION OF THE ENTIRE STANDPIPE SYSTEM AND AIR COMPRESSOR SHALL BE IMMEDIATELY PERFORMED TO DETERMINE THE CAUSE OF THE ALARM, UNLESS AUTHORIZED BY THE FIRE DEPARTMENT, NO CONSTRUCTION OR DEMOLITION WORK SHALL RESUME UNTIL THE STANDPIPE SYSTEM IS REPAIRED AND THE APPROPRIATE PRESSURE IS RESTORED, EXCEPT THAT ANY REPAIRS TO THE STANDPIPE SYSTEM NEEDED TO RESTORE THE REQUIRED PRESSURE SHALL BE UNDERTAKEN IMMEDIATELY AND THE STANDPIPE SYSTEM RESTORE AS SOON AS POSSIBLE. THERE SHALL BE COMPLIANCE WITH THE REQUIREMENTS OF SECTION 901.7.7 OF THE NEW YORK CITY FIRE CODE WHILE THE STANDPIPE SYSTEM IS OUT OF SERVICE. UPON COMPLETION OF REPAIRS TO THE STANDPIPE SYSTEM A FULL INSPECTION OF SUCH SYSTEM SHALL BE PERFORMED, WHICH SHALL INCLUDE, AMONG OTHER THINGS, VISUALLY TRACING THE STANDPIPE, INCLUDING RISERS, CROSS CONNECTIONS AND SIAMESE CONNECTIONS TO VERIFY THAT NO BREACH EXISTS AND CHECKING ALL GAUGES OF THE STANDPIPE SYSTEM TO ENSURE THE STANDPIPE SYSTEM HAS BEEN RESTORED TO A STATE OD READINESS.
3. NOTWITHSTANDING THE PROVISION OF ITEM 4.2. THE ACTIVATION OF THE ALARM SHALL NOT REQUIRE CESSATION OF WORK NECESSARY FOR THE COMPLETION OF CONCRETE POURING OPERATIONS IN PROGRESS AT THE TIME OF ALARM ACTIVATION, WHERE SUCH CESSATION WOULD CAUSE A COLD JOINT THAT WOULD IMPAIR THE STRUCTURAL INTEGRITY OF THE FINISHED CONSTRUCTION. THE CONTINUATION OF SUCH OPERATIONS SHALL BE PERMITTED ONLY UNTIL AN ORDERLY TERMINATION OF SUCH OPERATIONS CAN BE EFFECTUATED. THE SITE SAFETY MANAGER OR COORDINATOR SHALL RECORD THE NAMES AND LOCATIONS OF NAY EMPLOYEES NECESSARY FOT THE COMPLETION OF THE CONCRETE POURING OPERATIONS AND PROVIDE THEM TO THE FIRE DEPARTMENT PERSONNEL WHO ARRIVE THE SCENE.
4. AIR COMPRESSOR IF USED. THE AIR COMPRESSOR SHALL BE DESIGNED TO AUTOMATICALLY CUT IN AND CUT OUT AT THE SUPERVISORY PRESSURE AND SHALL BE TIED INTO THE STANDPIPE SYSTEM, BETWEEN THE SIAMESE CONNECTIONS AND THE HOUSE CHECK VALVES. THE AIR COMPRESSOR SHALL UTILIZE AN AIR DRYER DURING TIMES WHEN FREEZING CONDITIONS EXIST TO CONDITION THE AIR ENTERING THE DRY STANDPIPE SYSTEM.
5. ALARM. THE STANDPIPE ALARM SYSTEM SHALL UTILIZE PRESSURE SWITCHES AND CONTROL EQUIPMENT TO ANNUNCIATE A LOCAL AUDIBLE ALARM ON SITE THAT CAN BE HEARD DURING WORKIN AND NON-WORKING HOURS. THE AUDIBLE SIGNAL OF THE HORN SHALL BE AT LEAST 15 DBA ABOVE THE AMBIENT NOISE LEVEL. BUT NOT MORE THAN 110 DBA.
6. POWER SUPPLY. THE STANDPIPE ALARM SYSTEM SHALL BE CONNECTED TO AN ACTIVE, DEDICATED POWER SUPPLY AT ALL TIMES.
7. CHECK VALVES. CHECK VALVES SHALL BE INSTALLED TO PREVENT WATER FROM ENTERING THE AIR COMPRESSOR.
8. LOCKS AND CAPS. ALL CONTROL VALVES SHALL BE CHAINED AND LOCKED IN THE APPROPRIATE POSITION AND SHALL BE PROVIDED WITH CAPPED OUTLETS. ALL HOSE VALVES SHALL ALSO BE PROVIDED WITH CAPPED OUTLETS.
9. FIRE DEPARTMENT CONNECTIONS, THREE INCH (76 MM) IRON HOSE PLUGS WITH GASKETS IN FIRE DEPARTMENT CONNECTIONS SWIVELS SHALL BE PROVIDED.
10. MANUAL RELEASE CONNECTION. A MINIMUM 2.5 INCH (64MM) CONNECTION LOCATED IMMEDIATELY DOWNSTEAM OF THE FIRE DEPARTMENT SIAMESE CONNECTION CHECK VALVE SHALL BE PROVIDED AND PIPED TO A LOCATION IMMEDIATELY ADJACENT TO THE SIAMESE CONNECTIONS. THIS LINE SHALL BE FITTED WITH 2.5 INCH (64 MM) HOSE VALVE AND SHALL ALLOW FOR RELEASE OF THE PRESSURIZED AIR FROM THE DRY STANDPIPE SYSTEM. THE NUMBER OF AIR RELEASE VALVES PROVIDED SHALL BE SUCH THAT THE AIR PRESSURE SHALL BE PERFORMED AT THE TIME OF THE INITIAL INSTALLATION.
11. CONSTRUCTION DOCUMENTS. PLANS SHALL IDENTIFY ALL STANDPIPE RISERS, CROSS CONNECTIONS, SIAMESE CONNECTIONS, ANY INTERMEDIATE CHECK VALVES THAT HAVE TO BE REMOVED, PROPOSED LOCATION OF THE AIR RELEASE CONNECTIONS. DESIGNATION OF THE SUPERVISORY PRESSURE, COMPLETE INFORMATION REGARDING THE ALARM SYSTEM, AND PROCEDURES FOR THE SAFE PRESSURIZATION AND DEPRESSURIZATION OF THE SYSTEM.
12. SIGNAGE. SIGNAGE SHALL BE PROVIDED AT ALL SIAMESE CONNECTIONS INDICATING THAT THE DRY STANDPIPE SYSTEM IS PRESSURED AND SHOWING THE LOCATION OF THE MANUAL AIR RELEASE.

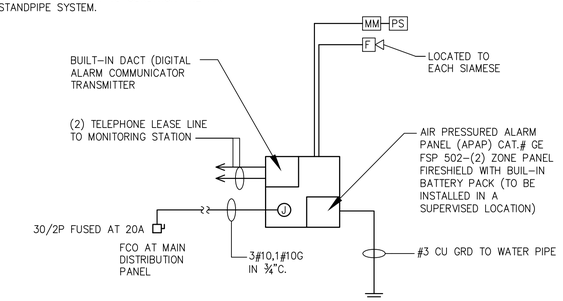

ALARM RISER DIAGRAM

N.T.S.

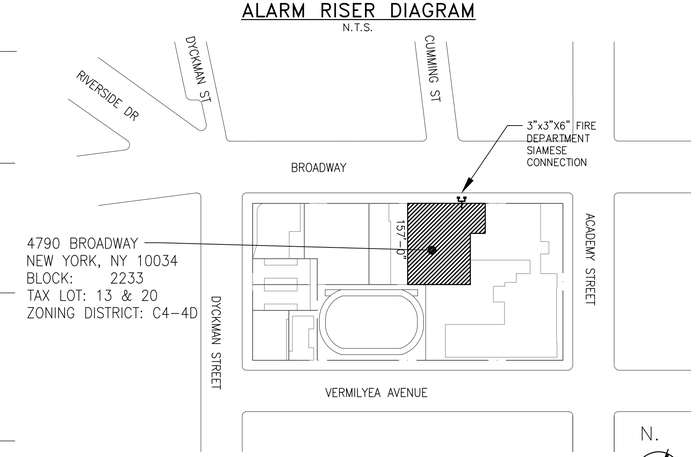

SITE PLAN WITH SIAMESE CONNECTIONS

N.T.S.

THIS PROPERTY IS NOT LOCATED IN A SFHA PLAN.

FIRE CONNECTION ARE FILED UNDER DOB#

BUILDING DEPARTMENT NOTE: "THIS PLAN IS APPROVED ONLY FOR WORK INDICATED ON THE APPLICATION SPECIFICATION SHEET. ALL OTHER MATTERS SHOWN ARE NOT TO BE RELIED UPON, OR TO BE CONSIDERED AS EITHER BEING APPROVED OR IN ACCORDANCE WITH APPLICABLE CODES".

ALTERATION OR RE-USE OF THIS DRAWING FOR OTHER THAN THIS PROJECT WITHOUT WRITTEN CONSENT OF THE ABOVE ENGINEER IS PROHIBITED BY LAW.

Client:

RANGER PROPERTIES
4790 BROADWAY
NEW YORK, NY 10034

Architect:

FOGARTY FINGER architecture | interiors
69 Walker St, New York, NY 10013
t 212 966 7450 f 212 966 7444

Library Architect:

Andrew Berman Architect, PLLC
77 Chambers Street, 4th Floor
New York, NY 10007
Tel 212.226.5998

Structural:

Thornton Tomasetti
51 Madison Avenue
New York, NY 10010
Tel 917.661.7800

MEP / FP:

Concessi Engineering, PC
499 7th Avenue, 11th Floor South Tower
New York, NY 10018
Tel 212.629.6810

FACADE:

SIMPSON GUMPERTZ & HEGER
550 7th Avenue, 10th Floor
New York, NY 10018
Tel 212.271.7000

CODE:

METROPOLIS
22 Courtland Street, 10th Floor
New York, NY 10007
Tel 212.233.6344

No.	Date	Issue
2	02/06/19	ISSUED FOR FILING / DD ESTIMATING
1	01/29/19	ISSUED FOR PROGRESS

Project:

4790 BROADWAY
NEW YORK, NY 10034

Drawing Title:

SPRINKLER TEMPORARY DRY FIRE STANDPIPE RISER DIAGRAM

Seal & Signature:

STATE OF NEW YORK · ROBERT J. CONCESSI · No. 86705 · LICENSED PROFESSIONAL ENGINEER

DATE (MM-DD-YY):	11-02-2018
PROJECT No.:	7815.00
DRAWING BY:	DP
CHK BY:	JV/RC
DWG. No.:	SP-402.00
CADD FILE No.:	–

APPENDIX 2

CITIZEN PARTICIPATION PLAN

The NYC Office of Environmental Remediation and Ranger Properties have established this Citizen Participation Plan because the opportunity for citizen participation is an important component of the NYC Voluntary Cleanup Program. This Citizen Participation Plan describes how information about the project will be disseminated to the Community during the remedial process. As part of its obligations under the NYC VCP, Ranger Properties will maintain a repository for project documents and provide public notice at specified times throughout the remedial program. This Plan also takes into account potential environmental justice concerns in the community that surrounds the project Site. Under this Citizen Participation Plan, project documents and work plans are made available to the public in a timely manner. Public comment on work plans is strongly encouraged during public comment periods. Work plans are not approved by the NYC Office of Environmental Remediation (OER) until public comment periods have expired and all comments are formally reviewed. An explanation of cleanup plans in the form of a public meeting or informational session is available upon request to OER's project manager assigned to this Site, Myrna Hanna who can be contacted about these issues or any others questions, comments or concerns that arise during the remedial process at (212) 788-8841.

Project Contact List: OER has established a Site Contact List for this project to provide public notices in the form of fact sheets to interested members of the Community. Communications will include updates on important information relating to the progress of the cleanup program at the Site as well as to request public comments on the cleanup plan. The Project Contact List includes owners and occupants of adjacent buildings and homes, principal administrators of nearby schools, hospitals and day care centers, the public water supplier that serves the area, established document repositories, the representative Community Board, City Council members, other elected representatives and any local Brownfield Opportunity Area (BOA) grantee organizations. Any member of the public or organization will be added to the

Site Contact List on request. A copy of the Site Contact List is maintained by OER's project manager. If you would like to be added to the Project Contact List, contact NYC OER at (212) 788-8841 or by email at brownfields@cityhall.nyc.gov.

Repositories: A document repository is maintained online. Internet access to view OER's document repositories is available at public libraries. This document repository is intended to house, for community review, all principal documents generated during the cleanup program including Remedial Investigation plans and reports, Remedial Action work plans and reports, and all public notices and fact sheets produced during the lifetime of the remedial project. The library nearest the Site is:

New York Public Library – Kingsbridge Branch
291 West 231st Street, Bronx, New York
(718) 548-5656
Monday-Thursday: 10AM-7PM
Friday-Saturday: 10AM-5PM
Sunday: Closed

Digital Documentation: NYC OER requires the use of digital documents in our repository as a means of minimizing paper use while also increasing convenience in access and ease of use.

Issues of Public Concern: The main issue of concern to the public will be potential construction noise. Impacts of dust and odors are not expected since only minor excavation will take place within an existing basement. Detailed plans to monitor the potential for exposure will be specified under a Health and Safety Plan and air & dust monitoring (CAMP) will be performed during excavation activities.

Public Notice and Public Comment: Public notice to all members of the Project Contact List is required at three major steps during the performance of the cleanup program (listed below) and at other points that may be required by OER. Notices will include Fact Sheets with descriptive project summaries, updates on recent and upcoming project activities, repository information, and important phone and email contact information. All notices will be reviewed

and approved by OER prior to distribution and mailed by the Enrollee. Public comment is solicited in public notices for all work plans developed under the NYC Voluntary Cleanup Program. Final review of all work plans by OER will consider all public comments. Approval will not be granted until the public comment period has been completed.

Citizen Participation Milestones: Public notice and public comment activities occur at several steps during a typical NYC VCP project. These steps include:

- **Public Notice of the availability of the Remedial Investigation Report and Remedial Action Work Plan and a 30-day public comment period on the Remedial Action Work Plan:** Public notice in the form of a Fact Sheet is sent to all parties listed on the Site Contact List announcing the availability of the Remedial Investigation Report and Remedial Action Work Plan and the initiation of a 30-day public comment period on the Remedial Action Work Plan. The Fact Sheet summarizes the findings of the RIR and provides details of the RAWP. The public comment period will be extended an additional 15 days upon public request. A public meeting or informational session will be conducted by OER upon request.
- **Public Notice announcing the approval of the RAWP and the start of remediation:** Public notice in the form of a Fact Sheet is sent to all parties listed on the Site Contact List announcing the approval of the RAWP and the start of remediation.
- **Public Notice announcing the completion of remediation, designation of Institutional and Engineering Controls and issuance of the Notice of Completion:** Public notice in the form of a Fact Sheet is sent to all parties listed on the Site Contact List announcing the completion of remediation, providing a list of all Institutional and Engineering Controls implemented for to the Site and announcing the issuance of the Notice of Completion.

APPENDIX 3

SUSTAINABILITY STATEMENT

This Sustainability Statement documents sustainable activities and green remediation efforts planned under this remedial action.

Reuse of Clean, Recyclable Materials and Reduced Consumption of Non-Renewable Resources: Reuse of clean, locally-derived recyclable materials reduces consumption of non-renewable virgin resources and can provide energy savings and greenhouse gas reduction.

An estimate of the quantity (in tons) of clean, non-virgin materials (reported by type of material) reused under this plan will be quantified and reported in the RAR.

Reduced Energy Consumption and Promotion of Greater Energy Efficiency: Reduced energy consumption lowers greenhouse gas emissions, improves local air quality, lessens in-city power generation requirements, can lower traffic congestion, and provides substantial cost savings.

Best efforts will be made to quantify energy efficiencies achieved during the remediation and will be reported in the Remedial Action Report (RAR). Where energy savings cannot be easily quantified, a gross indicator of the amount of energy saved or the means by which energy savings was achieved will be reported.

Conversion to Clean Fuels: Use of clean fuel improves NYC's air quality by reducing harmful emissions.

Natural gas will be utilized for fuel in the new building. An estimate of the volume of clean fuels used during remedial activities will be quantified and reported in the RAR.

Recontamination Control: Recontamination after cleanup and redevelopment is completed undermines the value of work performed, may result in a property that is less

protective of public health or the environment, and may necessitate additional cleanup work later or impede future redevelopment. Recontamination can arise from future releases that occur within the property or by influx of contamination from off-Site.
An estimate of the area of the Site that utilizes recontamination controls under this plan will be reported in the RAR in square feet.

Stormwater Retention: Stormwater retention improves water quality by lowering the rate of combined stormwater and sewer discharges to NYC's sewage treatment plants during periods of precipitation, and reduces the volume of untreated influent to local surface waters.
An estimate of the enhanced stormwater retention capability of the redevelopment project will be included in the RAR.

Linkage with Green Building: Green buildings provide a multitude of benefits to the city across a broad range of areas, such as reduction of energy consumption, conservation of resources, and reduction in toxic materials use.
The number of Green Buildings that are associated with this brownfield redevelopment property will be reported in the RAR. The total square footage of green building space created as a function of this brownfield redevelopment will be quantified for residential, commercial and industrial/manufacturing uses.

Paperless Voluntary Cleanup Program: Ranger Properties is participating in OER's Paperless Voluntary Cleanup Program. Under this program, submission of electronic documents will replace submission of hard copies for the review of project documents, communications and milestone reports.

Low-Energy Project Management Program: Ranger Properties is participating in OER's low-energy project management program. Under this program, whenever possible, meetings are held using remote communication technologies, such as videoconferencing and teleconferencing to reduce energy consumption and traffic congestion associated with personal transportation.

Trees and Plantings: Trees and other plantings provide habitat and add to NYC's environmental quality in a wide variety of ways. Native plant species and native habitat provide optimal support to local fauna, promote local biodiversity, and require less maintenance.

An estimate of the land area that will be vegetated, including the number of trees planted or preserved, will be reported in square feet in the RAR.

APPENDIX 4

SOIL/MATERIALS MANAGEMENT PLAN

1.1 Soil Screening Methods

Visual, olfactory and PID soil screening and assessment will be performed under the supervision of a Qualified Environmental Professional and will be reported in the final remedial report. Soil screening will be performed during invasive work performed during the remedy and development phases prior to issuance of final signoff by OER.

1.2 Stockpile Methods

Excavated soil from suspected areas of contamination (e.g., hot spots, USTs, drains, etc.) will be stockpiled separately and will be segregated from clean soil and construction materials. Stockpiles will be used only when necessary and will be removed as soon as practicable. While stockpiles are in place, they will be inspected daily, and before and after every storm event. Results of inspections will be recorded in a logbook and maintained at the Site and available for inspection by OER. Excavated soils will be stockpiled on, at minimum, double layers of 8-mil minimum sheeting, will be kept covered at all times with appropriately anchored plastic tarps, and will be routinely inspected. Broken or ripped tarps will be promptly replaced.

All stockpile activities will be compliant with applicable laws and regulations. Soil stockpile areas will be appropriately graded to control run-off in accordance with applicable laws and regulations. Stockpiles of excavated soils and other materials shall be located at least of 50 feet from the property boundaries, where possible. Hay bales or equivalent will surround soil stockpiles except for areas where access by equipment is required. Silt fencing and hay bales will be used as needed near catch basins, surface waters and other discharge points.

1.3 Characterization of Excavated Materials

Soil/fill or other excavated media that is transported off-Site for disposal will be sampled in a manner required by the receiving facility, and in compliance with applicable laws and regulations. Soils proposed for reuse on-Site will be managed as defined in this plan.

1.4 Materials Excavation, Load-Out, and Departure

The PE/QEP overseeing the remedial action will:

- oversee remedial work and the excavation and load-out of excavated material;
- ensure that there is a party responsible for the safe execution of invasive and other work performed under this work plan;
- ensure that Site development activities and development-related grading cuts will not interfere with, or otherwise impair or compromise the remedial activities proposed in this RAWP;
- ensure that the presence of utilities and easements on the Site has been investigated and that any identified risks from work proposed under this plan are properly addressed by appropriate parties;
- ensure that all loaded outbound trucks are inspected and cleaned if necessary before leaving the Site;
- ensure that all egress points for truck and equipment transport from the Site will be kept clean of Site-derived materials during Site remediation.

Locations where vehicles exit the Site shall be inspected daily for evidence of soil tracking off premises. Cleaning of the adjacent streets will be performed as needed to maintain a clean condition with respect to Site-derived materials.

Open and uncontrolled mechanical processing of historical fill and contaminated soil on-Site will not be performed without prior OER approval.

1.5 Off-Site Materials Transport

Loaded vehicles leaving the Site will comply with all applicable materials transportation requirements (including appropriate covering, manifests, and placards) in accordance with applicable laws and regulations, including use of licensed haulers in accordance with 6 NYCRR Part 364. If loads contain wet material capable of causing leakage from trucks, truck liners will be used. Queuing of trucks will be performed on-Site, when possible in order to minimize off Site disturbance. Off-Site queuing will be minimized.

Outbound truck transport routes are described in the remedial report. This routing takes into account the following factors: (a) limiting transport through residential areas and past sensitive sites; (b) use of mapped truck routes; (c) minimizing off-Site queuing of trucks entering the facility; (d) limiting total distance to major highways; (e) promoting safety in access to highways; and (f) overall safety in transport. To the extent possible, all trucks loaded with Site materials will travel from the Site using these truck routes. Trucks will not stop or idle in the neighborhood after leaving the project Site.

1.6 Materials Disposal Off-Site

The following documentation will be established and reported by the PE/QEP for each disposal destination used in this project to document that the disposal of regulated material exported from the Site conforms with applicable laws and regulations: (1) a letter from the PE/QEP or Enrollee to each disposal facility describing the material to be disposed and requesting written acceptance of the material. This letter will state that material to be disposed is regulated material generated at an environmental remediation Site in New York City under a governmental remediation program. The letter will provide the project identity and the name and phone number of the PE/QEP or Enrollee. The letter will include as an attachment a summary of all chemical data for the material being transported; and (2) a letter from each disposal facility stating it is in receipt of the correspondence (1, above) and is approved to accept the material. These documents will be included in the final remedial report.

The Remedial Action Report will include an itemized account of the destination of all material removed from the Site during this remedial action. Documentation associated with disposal of all material will include records and approvals for receipt of the material. This information will be presented in the final remedial report.

All impacted soil/fill or other waste excavated and removed from the Site will be managed as regulated material and will be disposed in accordance with applicable laws and regulations. Historic fill and contaminated soils taken off-Site will be handled as solid waste and will not be disposed at a Part 360-16 Registration Facility (also known as a Soil Recycling Facility).

Waste characterization will be performed for off-Site disposal in a manner required by the receiving facility and in conformance with its applicable permits. Waste characterization sampling and analytical methods, sampling frequency, analytical results and QA/QC will be

reported in the final remedial report. A manifest system for off-Site transportation of exported materials will be employed. Manifest information will be reported in the final remedial report. Hazardous wastes derived from on-Site will be stored, transported, and disposed of in compliance with applicable laws and regulations.

If disposal of soil/fill from this Site is proposed for unregulated disposal (i.e., clean soil removed for development purposes), including transport to a Part 360-16 Registration Facility, a formal request will be made for approval by OER with an associated plan compliant with 6NYCRR Part 360-16. This request and plan will include the location, volume and a description of the material to be recycled, including verification that the material is not impacted by site uses and that the material complies with receipt requirements for recycling under 6NYCRR Part 360. This material will be appropriately handled on-Site to prevent mixing with impacted material.

1.7 Materials Reuse On-Site

Soil and fill that is derived from the property that meets the Soil Cleanup Objectives (SCOs) established in this plan may be reused on-Site. The SCOs for on-Site reuse are listed in Section 4.2 of this cleanup plan. 'Reuse on-Site' means material that is excavated during the remedy or development, does not leave the property, and is relocated within the same property and on land with comparable levels of contaminants in soil/fill material, compliant with applicable laws and regulations, and addressed pursuant to the NYC VCP agreement subject to Engineering and Institutional Controls. The PE/QEP will ensure that reused materials are segregated from other materials to be exported from the Site and that procedures defined for material reuse in this remedial plan are followed. The expected location for placement of reused material is shown in Section 4.2.

Organic matter (wood, roots, stumps, etc.) or other waste derived from clearing and grubbing of the Site will not be buried on-Site. Soil or fill excavated from the site for grading or other purposes will not be reused within a cover soil layer or within landscaping berms.

1.8 Demarcation

After completion of hotspot removal and any other invasive remedial activities, and prior to backfilling, the top of the residual soil/fill will be defined by one of three methods: (1) placement of a demarcation layer. The demarcation layer will consist of geosynthetic fencing or equivalent

material to be placed on the surface of residual soil/fill to provide an observable reference layer. A description or map of the approximate depth of the demarcation layer will be provided in the SMP; or (2) a land survey of the top elevation of residual soil/fill before the placement of cover soils, pavement and associated sub-soils, or other materials or structures or, (3) all materials beneath the approved cover will be considered impacted and subject to site management after the remedy is complete. Demarcation may be established by one or any combination of these three methods. As appropriate, a map showing the method of demarcation for the Site and all associated documentation will be presented in the RAR.

This demarcation will constitute the top of the site management horizon. Materials within this horizon require adherence to special conditions during future invasive activities as defined in the Site Management Plan.

1.9 Import of Backfill Soil From Off-Site Sources

This Section presents the requirements for imported fill materials to be used below the cover layer and within the clean soil cover layer. All imported soils will meet OER-approved backfill and cover soil quality objectives for this Site. Imported soils will not exceed groundwater protection standards established in Part 375. Imported soils for Track 1 remedial action projects will not exceed Track 1 SCO's.

A process will be established to evaluate sources of backfill and cover soil to be imported to the Site, and will include an examination of source location, current and historical use(s), and any applicable documentation. Material from industrial sites, spill sites, environmental remediation sites or other potentially contaminated sites will not be imported to the Site.

The following potential sources may be used pending attainment of backfill and cover soil quality objectives:

- Clean soil from construction projects at non-industrial sites in compliance with applicable laws and regulations;
- Clean soil from roadway or other transportation-related projects in compliance with applicable laws and regulations;
- Clean recycled concrete aggregate (RCA) from facilities permitted or registered by the regulations of NYS DEC.

- All materials received for import to the Site will be approved by a PE/QEP and will be in compliance with provisions in this remedial plan. The final remedial report will report the source of the fill, evidence that an inspection was performed on the source, chemical sampling results, frequency of testing, and a Site map indicating the locations where backfill or soil cover was placed.
- All material will be subject to source screening and chemical testing.
- Inspection of imported fill material will include visual, olfactory and PID screening for evidence of contamination. Materials imported to the Site will be subject to inspection, as follows:
- Trucks with imported fill material will be in compliance with applicable laws and regulations and will enter the Site at designated locations;
- The PE/QEP is responsible to ensure that every truck load of imported material is inspected for evidence of contamination; and
- Fill material will be free of solid waste including pavement materials, debris, stumps, roots, and other organic matter, as well as ashes, oil, perishables or foreign matter.

Composite samples of imported material will be taken at a minimum frequency of one sample for every 500 cubic yards of material. Once it is determined that the fill material meets imported backfill or cover soil chemical requirements and is non-hazardous, and lacks petroleum contamination, the material will be loaded onto trucks for delivery to the Site.

Recycled concrete aggregate (RCA) will be imported from facilities permitted or registered by NYSDEC. Facilities will be identified in the final remedial report. A PE/QEP is responsible to ensure that the facility is compliant with 6NYCRR Part 360 registration and permitting requirements for the period of acquisition of RCA. RCA imported from compliant facilities will not require additional testing, unless required by NYSDEC under its terms for operation of the facility. RCA imported to the Site must be derived from recognizable and uncontaminated concrete. RCA material is not acceptable for, and will not be used as cover material.

1.10 Fluids Management

All liquids to be removed from the Site, including dewatering fluids, will be handled, transported and disposed in accordance with applicable laws and regulations. Liquids discharged into the

New York City sewer system will receive prior approval by New York City Department of Environmental Protection (NYC DEP). The NYC DEP regulates discharges to the New York City sewers under Title 15, Rules of the City of New York Chapter 19. Discharge to the New York City sewer system will require an authorization and sampling data demonstrating that the groundwater meets the City's discharge criteria. The dewatering fluid will be pretreated as necessary to meet the NYC DEP discharge criteria. If discharge to the City sewer system is not appropriate, the dewatering fluids will be managed by transportation and disposal at an off-Site treatment facility.

Discharge of water generated during remedial construction to surface waters (i.e. a stream or river) is prohibited without a SPDES permit issued by New York State Department of Environmental Conservation.

1.11 Stormwater Pollution Prevention

Applicable laws and regulations pertaining to stormwater pollution prevention will be addressed during the remedial program. Erosion and sediment control measures identified in this remedial plan (silt fences and barriers, and hay bale checks) will be installed around the entire perimeter of the remedial construction area and inspected once a week and after every storm event to ensure that they are operating appropriately. Discharge locations will be inspected to determine whether erosion control measures are effective in preventing significant impacts to receptors. Results of inspections will be recorded in a logbook and maintained at the Site and available for inspection by OER. All necessary repairs shall be made immediately. Accumulated sediments will be removed as required to keep the barrier and hay bale check functional. Undercutting or erosion of the silt fence toe anchor will be repaired immediately with appropriate backfill materials. Manufacturer's recommendations will be followed for replacing silt fencing damaged due to weathering.

1.12 Contingency Plan for Unknown Contamination Sources

This contingency plan is developed for the remedial construction to address the discovery of unknown structures or contaminated media during excavation. Identification of unknown contamination source areas during invasive Site work will be promptly communicated to OER's Project Manager. Petroleum spills will be reported to the NYS DEC Spill Hotline. These findings

will be included in the daily report. If previously unidentified contaminant sources are found during on-Site remedial excavation or development-related excavation, sampling will be performed on contaminated source material and surrounding soils and reported to OER. Chemical analytical testing will be performed for TAL metals, TCL volatiles and semi-volatiles, TCL pesticides and PCBs, as appropriate.

1.13 Odor, Dust, and Nuisance Control

Odor Control

All necessary means will be employed to prevent on- and off-Site odor nuisances. At a minimum, procedures will include: (a) limiting the area of open excavations; (b) shrouding open excavations with tarps and other covers; and (c) use of foams to cover exposed odorous soils. If odors develop and cannot otherwise be controlled, additional means to eliminate odor nuisances will include: (d) direct load-out of soils to trucks for off-Site disposal; and (e) use of chemical odorants in spray or misting systems.

This odor control plan is capable of controlling emissions of nuisance odors. If nuisance odors are identified, work will be halted and the source of odors will be identified and corrected. Work will not resume until all nuisance odors have been abated. OER will be notified of all odor complaint events. Implementation of all odor controls, including halt of work, will be the responsibility of the PE/QEP's certifying this remedial plan.

Dust Control

Dust management during invasive on-Site work will include, at a minimum:

- Use of a dedicated water spray methodology for roads, excavation areas and stockpiles.
- Use of properly anchored tarps to cover stockpiles.
- Exercise extra care during dry and high-wind periods.
- Use of gravel or recycled concrete aggregate on egress and other roadways to provide a clean and dust-free road surface.

This dust control plan is capable of controlling emissions of dust. If nuisance dust emissions are identified, work will be halted and the source of dusts will be identified and corrected. Work will not resume until all nuisance dust emissions have been abated. OER will be notified of all

dust complaint events. Implementation of all dust controls, including halt of work, will be the responsibility of the PE/QEP's responsible for certifying this remedial plan.

Other Nuisances

Noise control will be exercised during the remedial program. All remedial work will conform, at a minimum, to NYC noise control standards.

Rodent control will be provided during Site clearing and grubbing and during the remedial program, as necessary, to prevent nuisances.

APPENDIX 5

CONSTRUCTION HEALTH AND SAFETY PLAN

vEKtor consultants

t: +1.347.871.0750 info@vektorconsultants.com
f: +1.347.402.7735 www.vektorconsultants.com

CONSTRUCTION HEALTH AND SAFETY PLAN

NYC VCP Project Number TBD
OER Project Number 18TMP1075M

Prepared For:	Ranger Properties
Project Name:	The Eliza
Project Location:	4790 Broadway, New York, New York
Date:	March 27, 2019

33 Irving Place, 3rd Floor, New York, NY 10003

Health and Safety Plan

The Eliza
4790 Broadway
New York, New York
18TMP1075M

March 27, 2019

Emergency Contacts			
Position	**Name**	**Organization**	**Phone**
Site Supervisor	TBD	Ranger Properties	(212) 675-6900
Site Health and Safety Supervisor	Ezgi Karayel	Vektor Consultants	(347) 871-0750
Client Contact	Sheldon Stein	Ranger Properties	(212) 675-6900
Emergency Response		FDNY	911

Emergency Medical Facility	
Primary	***Alternate***
New York Presbyterian – the Allen Hospital 5141 Broadway, New York, NY Tel: (212) 932-4000 Monday-Sunday: Open 24 Hours	New York Presbyterian Hospital 575 West 181st Street, New York, NY Tel: (866) 432-2778 Monday-Tuesday-Wednesday-Friday: 9:45AM-5PM Thursday: 9:30AM-6PM Saturday-Sunday: Closed
Route to emergency medical facility map attached to back of this health & safety plan	

This plan was prepared by:

vEKtor consultants

33 Irving Place, 3rd Floor
New York, NY 10003
(347) 871-0750

Sign-in Sheet

Name	Signature	Company	Date

Table of Contents

Element 1 - Organizational Structure **1**
Site Supervisor 1
Site Health and Safety Supervisor 2
General Site Workers 3
Contractors and Subcontractors 3
Local/State/Federal Agency Representative 3
Client Contact 3
Contact Summary Table 4

Element 2 - Hazard Analysis **5**
Site Description 5
Hazard Notification Process 6
Phases, Site Tasks and Hazard Analysis 6
Job Hazard Analysis Worksheets 8
Hazardous Substance Profiles 9

Element 3 - Training Program **10**
Initial HAZWOPER Training 10
Required Supervised Field Experience 11
Site-Specific Training for Site Workers 11
Site Briefings for Visitors and Workers 11
On-Site Management and Supervisor Training 12
Qualification of Trainers 12
Training Certification 12
Emergency Response Training 12
Refresher Training 12
Equivalent Training 12
Training Records 13

Element 4 - Medical Surveillance Program **14**

Element 5 - Site Control Program **15**
Site Map 15
Site Access Procedures 15
Site Security 16
Internal and External Communications 16
Medical Assistance 16
Use of the Buddy System 16

Element 6 - Personal Protective Equipment **17**
PPE Selection Criteria 17
Site-Specific PPE 18
Training In Use of PPE 18
Minimum Standards for PPE 18
Hearing Conservation 18
PPE Maintenance & Storage 19
Using PPE at This Site 19

Table of Contents

Element 7 - Environmental Monitoring **20**
Air Monitoring Procedures 20
Initial Monitoring Procedures 20
Periodic Monitoring 20
Direct-Reading Instrument Monitoring Procedures 21

Element 8 - Spill Containment Program **22**
Potential for Spills and Available Controls 22

Element 9 - Decontamination **23**
General and Specific Decontamination Procedures for Site Workers and PPE 23
General and Specific Decontamination Procedures for Equipment 24
Location and Type of Site Decontamination Procedures 24
Disposal of Waste from Decontamination 24
Monitoring the Effectiveness of Decontamination Procedures 24

Element 10 - Emergency Response Plan **25**
Pre-Emergency Planning 25
Personnel Roles, Lines of Authority, and Communication 26
Emergency Recognition and Prevention 27
Safe Distances and Places of Refuge 27
Site Security and Control 27
Evacuation Routes and Procedures 27
Emergency Decontamination Procedures 28
Emergency Medical Treatment and First Aid 28
Emergency Alerting and Response Procedures 28
Critique of Response and Follow-Up 29
Emergency Equipment and PPE 29
Procedures for Handling Emergency Incidents 29

Element 11 - Confined Space Entry Procedures **30**

Element 12 - Standard Operating Procedures (SOPs) **31**

Element 13 - Thermal Stress Issues **32**

Element 14 - Hot Work Requirements **33**

Element 15 - Energy Control or LOTO Program **34**

Attachment 1 - Job Hazard Analysis Worksheets **35**

Attachment 2 - Hazardous Substance Profiles and/or SDS **38**

Attachment 3 - Figures and Maps **45**

Element 1 - Organizational Structure

This HASP element describes lines of authority, responsibility, and communication as they pertain to health and safety functions at this site in compliance with *29 CFR 1910.120(b)(2) and 29 CFR 1926.65(b)(2)*. This element also details key personnel who are responsible for the development and implementation of the HASP. Additionally, this element includes the general functions and responsibilities of supervisors and site workers, as well as a specific chain of command.

Ranger Properties, LLC has responsibility only for Ranger Properties, LLC employees during work conducted per this HASP. Ranger Properties, LLC will provide a copy of this HASP to each contractor and subcontractor in accordance with *29 CFR 1910.120(b)(1)(iv) and 29 CFR 1926.65(b)(1)(iv)* to inform them of site hazards and emergency procedures. All contractors and subcontractors are solely responsible for the safe and healthful performance of all work by each of its employees and/or support personnel who may enter the site. Each contractor and subcontractor shall provide its own HASP as required by *29 CFR 1910.120 and 29 CFR 1926.65*.

Site Supervisor

As required by *29 CFR 1910.120(b)(2)(i)(A) and 29 CFR 1926.65(b)(2)(i)(A)*, is the Site Supervisor and is responsible for directing all hazardous waste operations. All other site personnel report directly to the Site Supervisor unless otherwise noted. The Site Supervisor is directly responsible for:

- Ensuring the pre-entry briefing and/or tailgate-safety meetings are held prior to initiating any site activity, and at such other times as necessary to ensure that employees are apprised of site hazards
- Ensuring that all work activities conducted are consistent with this HASP and making any modifications as necessary
- Verifying all Job Hazard Analyses and ensuring that ongoing Hazard Analysis is conducted at this site
- Overseeing the training program and ensuring that employees are trained for all tasks or operations they are asked to perform
- Providing a copy of this HASP to each contractor and subcontractor
- Updating the Site Control Program as needed
- Granting site workers site and zone access approval
- Registering all site visitors
- Establishing and maintaining security measures for this site
- Directing how each work zone is adjusted
- Notified if emergency assistance is needed
- Supervising PPE use on this site
- Approving any changes in PPE used on this site
- Notified when any hazardous-substance spill occurs
- Evaluating the quality and safety of response activities after every emergency incident or evacuation of this site
- Providing site workers with notifications and training on changes to the emergency response plan
- Evaluating confined spaces and responsible for the confined space permit program
- Performing initial monitoring to identify and evaluate any hazardous atmospheres during confined space operations
- Implementing the thermal stress program
- Authorizing the hot-work plan and cutting and welding operations
- Inspecting the hot-work permit area before work is authorized
- Responsible for the Lock Out/Tag Out (LOTO) program
- Monitoring site activities as they pertain to health and safety at this site

- Stopping any unsafe acts that pose an immediate or imminent health and safety hazard to anyone at this site
- Ensuring that all elements of this HASP are followed and correctly implemented
- Ensuring all personnel are apprised of their responsibilities and are fulfilling their requirements
- Updating the Site Health and Safety Supervisor and other applicable personnel as to changes or work progress reports that may pertain to health and safety functions at this site
- Setting up decontamination lines and the solutions appropriate for the type of chemical contamination on site
- Controlling the decontamination of all equipment, personnel and samples from the contaminated areas
- Providing for the disposal of contaminated clothing and materials
- Ensuring that all required decontamination equipment is available and in working order
- Providing for collection, storage and disposal of decontamination waste (e.g., rinse water, contaminated sediment, etc.)

Site Health and Safety Supervisor

As required by *29 CFR 1910.120(b)(2)(i)(B) and 29 CFR 1926.65(b)(2)(i)(B)*, Ezgi Karayel (or designated alternate) is the Site Health and Safety Supervisor who has the responsibility and authority for all functions that may pertain to health and safety at this site. This is the individual located on a hazardous waste site that is responsible to the Site Supervisor, and has the authority and knowledge necessary to implement the HASP and verify compliance with applicable safety and health requirements. The Site Health and Safety Supervisor is directly responsible for:

- Providing a copy of this HASP to each contractor and subcontractor
- Updating the Site Control Program as needed
- Notified if emergency assistance is needed
- Supervising PPE use on this site
- Approving any changes in PPE used on this site
- Notified when any hazardous-substance spill occurs
- Evaluating the quality and safety of response activities after every emergency incident or evacuation of this site
- Providing site workers with notifications and training on changes to the emergency response plan
- Performing initial monitoring to identify and evaluate any hazardous atmospheres during confined space operations
- Implementing the thermal stress program
- Authorizing the hot-work plan and cutting and welding operations
- Inspecting the hot-work permit area before work is authorized
- Developing and implementing the HASP
- Monitoring site activities as they pertain to health and safety at this site
- Stopping any unsafe acts that pose an immediate or imminent health and safety hazard to anyone at this site
- Ensuring that all elements of this HASP are followed and correctly implemented
- Verifying compliance of Ranger Properties, LLC employees with respect to this HASP and reporting deviations to the Site Supervisor
- Evaluating site incidents including spills, releases of hazardous substances, fires, or explosions
- Determining the appropriate response including site evacuations
- Implementing the Emergency Response Plan
- Coordinating emergency response activities on this site

Qualified alternate(s) for the Site Health and Safety Supervisor are: TBD

General Site Workers

General Site Workers are responsible for complying with this HASP, using the proper personal protective equipment (PPE), reporting unsafe acts and conditions to appropriate supervisory personnel, and following the work, safety and health instructions of the Site Supervisor, and representative of Vektor Consultants, Site Health and Safety Supervisor. General Site Workers report directly to, the Site Supervisor. General Site Workers at this site are listed in the Contact Summary Table at the end of this element.

The following types of workers are considered General Site Workers at this site:

- General Laborers

Contractors and Subcontractors

Each contractor and subcontractor shall designate a Contractor Site Representative. The Contractor Site Representative will interface directly with the Site Supervisor, and Vektor Consultants, the Site Health and Safety Supervisor, with regards to all areas that relate to this HASP and safe and healthful performance of work conducted by the contractor and/or subcontractor workforce. Contractor Site Representatives for this site are listed in the Contact Summary Table at the end of this element.

Local/State/Federal Agency Representative

Local, state, and/or federal agencies are responsible for ensuring the site is in compliance with appropriate regulatory requirements, permits, and/or legal ruling(s). Local/State/Federal Agency Representatives for this site are listed in the Contact Summary Table at the end of this element.

Client Contact

The Client Contact is the party responsible for the site or the commissioning site work owner. The Client Contact is listed in the Contact Summary Table at the end of this element.

The organizational structure shall be reviewed and updated as necessary to reflect the current status of site operations.

Contact Summary Table

Position	Name	Organization	Phone
Site Supervisor	TBD	Ranger Properties	(212) 675-6900
Site Health and Safety Supervisor	Ezgi Karayel	Vektor Consultants	(347) 871-0750
General Site Workers	TBD	Ranger Properties	(212) 675-6900
Contractor Site Representative	TBD	TBD	(718) 366-1800
Agency Representative	Myrna Hanna	NYCOER	(212) 788-8841
Client Contact	Sheldon Stein	Ranger Properties	(212) 675-6900

Element 2 - Hazard Analysis

This HASP element describes the safety and health hazards associated with site work and the control measures selected to protect workers in compliance with *29 CFR 1910.120(b)(4)(ii)(A) and 29 CFR 1926.65(b)(4)(ii)(A)*. This is accomplished by creating a specific Job Hazard Analysis for each task and operation to be conducted at the work site.

The purpose of the Job Hazard Analysis is to identify and, to the extent practicable, quantify the health and safety hazards associated with each site task and operation, and to evaluate the risks of each hazard to workers. With this information, appropriate control methods are selected to eliminate the identified risks if possible, or to effectively control them. The control methods are documented in each task-specific Job Hazard Analysis.

This element of the HASP includes:

- Site Description
- Hazard Notification Process
- Site Tasks and Hazard Analysis
- Job Hazard Analysis Worksheets (included in Attachment 1)
- Hazardous Substance Profiles (included in Attachment 2)

All incidents, injuries, illnesses, and near misses of incidents shall be reported to Ezgi Karayel (or designated alternate), the Site Health and Safety Supervisor, or designated alternate.

Job Hazard Analyses contained in this HASP have been developed by Vektor Consultants, the Site Health and Safety Supervisor. The Site Supervisor, is the individual responsible for reviewing and "verifying" that all Job Hazard Analyses are complete and to ensure that ongoing hazard analyses are conducted at this site.

Site Description

The Site is located at 4790 Broadway in the Inwood section in New York, New York and is identified as Block 2233, Lot 13 and about 6,000-square feet of the adjoining Lot 20 (partial) on the New York City Tax Map. he Site is 18,000-square feet and is bounded by Broadway to the north beyond which are a one-story commercial building utilized as a medical office and pharmacy, and a six-story mixed residential and commercial use building; a five-story public school to the south and east; and a vacant car wash to the west. The proposed future use of the Site will consist of a new 14-story mixed residential and commercial building with a full cellar. The new development will be 100% affordable and will provide 174 residential apartments and community facilities. The cellar will be utilized as kitchen, classrooms, mechanical rooms, utility rooms, storage, multi-purpose rooms, office, and bike room. The first floor will be utilized as mail package room, residential and community lobby, and library; the second floor will be utilized as classrooms, office, dining room, and library; the third through thirteenth floors will be utilized as residential apartment; the fourteenth floor will be utilized as residential apartments, lounge, gym, laundry and rooftop terrace. In order to construct the new cellar and foundation, approximately 75% of the Site will be excavated to approximately 12 feet below grade surface (bgs). Remaining areas will consist of approximately 3,600 square feet of residential rear yard, and 560 square feet of community/commercial rear yard.

Source information for preparing the above site description is from the following document(s):

- Phase I Environmental Site Assessment
- Phase II Environmental Site Investigation
- Remedial Action Work Plan

Hazard Notification Process

The information in the Job Hazard Analysis Worksheets, Hazardous Substance Profiles, and Safety Data Sheets (SDS) is made available to all employees who could be affected in the scope of their work at this site. This shall be done prior to beginning work activities.

New, or modifications to existing, Job Hazard Analysis Worksheets, Hazardous Substance Profiles, or SDS are communicated during routine briefings.

Consistent with *29 CFR 1910.120(i) and 29 CFR 1926.65(i)*, this information will also be made available to contractors and subcontractors.

The Site Supervisor, is the person responsible for providing site information, this HASP, and any modifications to this HASP to contractors and/or subcontractors working on this site.

Phases, Site Tasks and Hazard Analysis

Onsite Phases, Site Tasks and/or Operations

This HASP applies to the following Phases of work at this site:

- All Phases

This HASP will apply to the following Tasks and/or Operations that will be accomplished on this site:

- Construction
- Decontamination
- Demolition
- Excavation
- Inspection
- Mobilization
- Sampling - subsurface soil
- Site survey
- Traffic control
- Welding, cutting, brazing

Detailed information regarding site work locations, phases, tasks, and/or operations are included in the Job Hazard Analysis Worksheets, which are discussed later in this Element.

Chemical Hazards

Exposure to chemical hazards should always be avoided. When working around chemical hazards it is important to be protected by administrative and/or engineered controls or, if administrative and/or engineered controls are not practicable or fully protective, by use of proper personal protective equipment (PPE). A direct reading instrument must be used, as necessary, to establish potential worker exposure.

Below is a list of chemical hazards that may be encountered on this site.

Chemical Name	OSHA PEL (ppm)	OSHA PEL (mg/m^3)	NIOSH REL (ppm)	NIOSH REL (mg/m^3)	IDLH (ppm)	IDLH (mg/m^3)
ARSENIC METAL		0.01		0.002		5
LEAD METAL		0.05		0.05		100

OSHA PEL. OSHA sets permissible exposure limits (PELs) to protect workers against the health effects of exposure to hazardous substances. PELs are regulatory limits on the amount or concentration of a substance in the air. They may also contain a skin designation. PELs are enforceable. OSHA PELs are based on an 8-hour time weighted average (TWA) exposure.

ACGIH®; TLV®-TWA. ACGIH® develops threshold limit values (TLVs®) as exposure guidelines. The TLV®-TWA concentration for a conventional 8-hour workday and a 40-hour workweek, to which it is believed that nearly all workers may be repeatedly exposed, day after day, for a working lifetime without adverse effect. ***See ACGIH policy statement below.***

ACGIH® TLV®-STEL. A short-term exposure limit (STEL) 15-minute TWA exposure that should not be exceeded at any time during a workday, even if the 8-hour TWA is within the TLV®-TWA. The TLV®-STEL is the concentration to which it is believed that workers can be exposed continuously for a short period of time without suffering from 1) irritation, 2) chronic or irreversible tissue damage, 3) dose-rate-dependent toxic effects, or 4) narcosis of sufficient degree to increase the likelihood of accidental injury, impaired self-rescue, or materially reduced work efficiency. The TLV®-STEL will not necessarily protect against these effects if the daily TLV®-TWA is exceeded. The TLV®-STEL is not a separate, independent exposure guideline; rather, it supplements the TLV®-TWA where there are recognized acute effects from a substance whose toxic effects are primarily of a chronic nature. Exposures above the TLV®-TWA up to the TLV®-STEL should be less than 15 minutes, should occur less than four times per day, and there should be at least 60 minutes between successive exposures in this range. An averaging period other than 15 minutes may be recommended when this is warranted by observed biological effects. ***See ACGIH policy statement below.***

ACGIH® TLV®-C. The ceiling (C) concentration that should not be exceeded during any part of the working exposure. If instantaneous measurements are not available, sampling should be conducted for the minimum period of time sufficient to detect exposures at or above the ceiling value. ***See ACGIH policy statement below.***

IDLH. Immediately dangerous to life or health (IDLH) is a regulatory value defined as the maximum exposure concentration in the workplace from which one could escape within 30 minutes without any escape-impairing symptoms or any irreversible health effects. This value should be referred to in respirator selection.

ACGIH® Policy Statement. *These values are intended for use in the practice of industrial hygiene as guidelines or recommendations to assist in the control of potential workplace health hazards and for no other use. These values are not fine lines between safe and dangerous concentrations and should not be used by anyone untrained in the discipline of industrial hygiene.* ***It is imperative that the user of these values read the Introduction to each section of the TLV®/BEI® Book and be familiar with the Documentation of the TLVs® and BEIs® before applying the recommendations.*** *ACGIH® disclaims liability with respect to the use of the TLVs® and BEIs®.* ***See http://www.acgih.org/TLV/PolicyStmt.htm for more information.***

For more information on:

- PELs go to http://www.cdc.gov/niosh/pel88/pelstart.html or http://www.osha.gov/SLTC/pel/
- IDLH go to http://www.cdc.gov/niosh/idlh/idlhintr.html
- ACGIH® TLVs® go to http://www.acgih.org/TLV/

NOTE - More specific chemical information is available in the Hazardous Substance Profiles included in Attachment 2 of this HASP.

Physical Hazards

Below is a list of physical hazards that may be encountered during work activities at this site. Personal awareness, strict adherence to all safety requirements, and the use of proper PPE when applicable will help keep this work site safe.

- Demolition Operations
- Electrical
- Excavation/Trenching Operations
- Flammable Liquids - Storage and Use
- Hand Tool Use
- Heavy Manual Lifting/Moving
- Hot Surfaces
- Ladder Use
- Material Handling
- Noise (Sound Pressure Level), dBA
- Scaffolding Use
- Sharp Objects
- Slips/Trips/Falls
- Traffic - On or Near Site
- Utilities (electrical, gas, water, etc.) - Overhead
- Utilities (electrical, gas, water, etc.) - Underground
- Welding/Cutting/Burning Operations

Biological Hazards

Below is a list of biological hazards that may be encountered during work activities at this site. Personal awareness, strict adherence to all safety requirements, and the use of proper PPE when applicable will help keep this work site safe.

- Metals

Radiological Hazards

Job hazard analysis indicates that workers are not expected to encounter radiological hazards at this site for the phases, tasks and/or operations and work locations covered by this HASP.

Job Hazard Analysis Worksheets

Each site-specific Job Hazard Analysis Worksheet is included in Attachment 1. A single Job Hazard Analysis Worksheet may be used for multiple locations provided that the task or operation, and hazards and control measures, are the same in each location.

Each Job Hazard Analysis Worksheet lists the following information:

- Phase description
- Specific task or operation
- Specific location for task or operation
- Hazard analysis date(s) of task or operation
- Task or operation date(s)
- Person responsible for developing Job Hazard Analysis
- Person responsible for reviewing the Job Hazard Analysis
- Chemical, physical, biological and radiological hazards for each task or operation
- Specific control measures for each task or operation
- Required permit(s), if any

The Job Hazard Analysis Worksheet should be kept updated as information changes and previous copies should be retained.

Hazardous Substance Profiles

Hazardous Substance Profiles for each chemical hazard identified at the site are included in Attachment 2 of this HASP. The Hazardous Substance Profiles are designed to assist with "chemical guidelines" in which further information may be needed, including but not limited to an SDS. This information is not intended to replace an SDS, rather to augment one. The user should verify the contents to be accurate and up to date prior to use.

Element 3 - Training Program

The site safety and health Training Program is designed to provide workers with the training necessary to work safely on this site in compliance with *29 CFR 1910.120(b)(4)(ii)(B) and 29 CFR 1926.65(b)(4)(ii)(B)*. Training requirements for this site are based on the Job Hazard Analysis, contained in Attachment 1 this HASP, and relevant OSHA requirements. Employees who have not been trained to a level required by their job function and responsibility are not permitted to participate in or supervise field activities.

At this site, the Site Supervisor, oversees the Training Program and is responsible for ensuring that employees are trained for all tasks or operations they are asked to perform.

This Training Program is consistent with the requirements of *29 CFR 1910.120(e) and 29 CFR 1926.65(e)* and addresses the following site-specific information:

- Initial HAZWOPER Training
- Required Supervised Field Experience
- Site Specific Training for Site Workers
- Site Briefings for Visitors and Workers
- Management and Supervisor Training
- Qualification of Trainers
- Training Certification
- Emergency Response Training
- Refresher Training
- Equivalent Training
- Training Records

Initial HAZWOPER Training

Initial training requirements for site workers are based on the worker's potential for exposure and compliance with the requirements of *29 CFR 1910.120(e)(3) and 29 CFR 1926.65(e)(3)*.

General Site Workers (such as equipment operators, general laborers and supervisory personnel) engaged in hazardous substance removal or other activities that expose, or potentially expose, them to hazardous substances and health hazards shall receive a minimum of 40 hours of instruction off site, and a minimum of three days of actual field experience under direct supervision of a trained, experienced supervisor as per *29 CFR 1910.120(e)(3)(i) and 29 CFR 1926.65(e)(3)(i)*.

Specific Limited Task Workers on site only occasionally for a specific limited task (such as, but not limited to, groundwater monitoring, land surveying, or geophysical surveying) and who are unlikely to be exposed over permissible exposure limits and published exposure limits shall receive a minimum of 24 hours of instruction off site, and a minimum of one day of actual field experience under direct supervision of a trained, experienced supervisor as per *29 CFR 1910.120(e)(3)(ii) and 29 CFR 1926.65(e)(3)(ii)*.

Other workers regularly on site who work in areas that have been monitored and fully characterized, indicating that exposures are under permissible exposure limits and published exposure limits where respirators are not necessary, and the characterization indicates that there are no health hazards or the possibility of an emergency developing, shall receive a minimum of 24 hours of instruction off site, and a minimum of one day of actual field experience under direct supervision of a trained, experienced supervisor as per *29 CFR 1910.120(e)(3)(iii) and 29 CFR 1926.65(e)(3)(iii)*.

Required Supervised Field Experience

In accordance with *29 CFR 1910.120(e)(3)(i), (ii), and (iii) and 29 CFR 126.65(e)(3)(i), (ii), and (iii)*, site workers on this site shall provide documentation of having received the appropriate number of days (either 1 or 3) of supervised field experience under the direct supervision of a trained, experienced supervisor, or must receive the appropriate number of days of supervised field experience at this site.

Site-Specific Training for Site Workers

In addition to the initial HAZWOPER training requirements outlined above, site workers shall be trained on the following site-specific elements:

- Names of personnel and alternates responsible for site safety and health
- Health, safety and other hazards present
- Use of specific personal protective equipment (PPE) detailed in Elements 2 and 6 of this HASP
- Standard work practices by which the employee can minimize risks from the hazards detailed in Element 2 of this HASP
- Safe use of administrative and/or engineering controls and equipment detailed in Element 2 of this HASP
- Medical surveillance requirements detailed in Element 4 of this HASP
- The site control plan detailed in Element 5 of this HASP
- The spill containment program detailed in Element 8 of this HASP
- Decontamination procedures detailed in Element 9 of this HASP
- The emergency response plan detailed in Element 10 of this HASP
- Confined space entry procedures detailed in Element 11 of this HASP
- Hot work requirements as detailed in Element 14 of this HASP
- Portable fire extinguishers, in accordance with *29 CFR 1910.157 and 29 CFR 1926 Subpart F (Fire Protection and Prevention)*
- Heat and cold stress prevention
- Working safely around heavy equipment
- Hazard communication, in accordance with *29 CFR 1910.1200 and 29 CFR 1926.59*
- Lockout/tagout, in accordance with *29 CFR 1910.147 and 1926 Subpart K (Electrical)*
- Respirator use, in accordance with *29 CFR 1910.134 and 29 CFR 1926.103*
- Trenching and excavations, in accordance with *29 CFR 1926.651 and 29 CFR 1926.651*
- Concrete and masonry construction, in accordance with *29 CFR 1926.701-706 and 29 CFR 1926.701-706*
- Process safety management, in accordance with *29 CFR 1910.119 and 29 CFR 1926.64*
- Inorganic arsenic, in accordance with 29 CFR 1910.1018
- Lead, in accordance with 29 CFR 1910.1025 and CCR Title 8 1532.1

Site Briefings for Visitors and Workers

A site-specific briefing shall be provided to visitors who enter this site beyond the designated entry point. For visitors, the site-specific briefing shall include information about site hazards, the site layout including work zones and places of refuge, the emergency alarm system and emergency evacuation procedures, and other pertinent safety and health requirements, as appropriate.

Site workers shall review this HASP and shall be provided a site-specific briefing prior to the commencement of work. Additional briefings shall be provided, as necessary, to notify employees of changes to this HASP. This includes, but is not limited to:

- Changes or revisions to this HASP
- Changes in site conditions
- Changes in the work schedule/plan
- Additional hazards discovered
- Accidents or incidents that occurred at this work site

On-Site Management and Supervisor Training

In addition to the initial training requirements as described above, on-site management and supervisors directly responsible for, or who supervise employees engaged in hazardous waste operations, shall receive at least eight additional hours of specialized training at the time of job assignment in accordance with *29 CFR 1910.120(e)(4) and 29 CFR 1926.65(e)(4)*.

Training received by management and supervisors includes:

- Employer's safety and health program
- Personal protective equipment program
- Spill containment program
- Health hazard monitoring procedures and techniques
- Management of hazardous waste site clean-up operations
- Management of the site work zones
- Communication with the press and local community

Qualification of Trainers

Only instructors qualified in accordance with *29 CFR 1910.120(e)(5) and 29 CFR 1926.65(e)(5)* are used to train workers for this site. Qualified instructors have either completed a training program for the subjects they are expected to teach or have the academic credentials and instructional experience necessary for teaching the subjects.

Training Certification

Site workers including on-site management and supervisors who have received and completed the necessary training and field experience are certified. A written certificate is given to each person so certified. Any person who has not been certified is prohibited from engaging in hazardous waste operations on this site.

Emergency Response Training

Emergency response training is addressed in Element 10 of this HASP, Emergency Response Plan.

Refresher Training

Site workers, including on-site management and supervisors, shall receive annual HAZWOPER refresher training consistent with the requirements of *29 CFR 1910.120(e)(8) and 29 CFR 1926.65(e)(8)*.

Equivalent Training

This site does not accept prior academic training or job site experience in lieu of HAZWOPER initial training for workers and supervisors.

Training Records

Written certificates and up-to-date records of site-specific training for each site worker, including on-site management and supervisors, are retained. A sign-off sheet indicating that each worker has received a copy of this HASP and understands its contents is also retained. These records are stored at the following location:

Site Office

Element 4 - Medical Surveillance Program

The Medical Surveillance Program is designed to medically monitor worker health to ensure that personnel are not adversely affected by site hazards in compliance with *29 CFR 1910.120(b)(4)(ii)(D) and 29 CFR 1926.65(b)(4)(ii)(D)*.

Medical surveillance is not required at this site due to:

- There is NO potential for worker exposure to hazardous substances at levels above OSHA permissible exposure limits or other published limits for 30 days or more per year, without regard to use of respiratory protection.
- Employees DO NOT wear a respirator for 30 days or more a year or as required by *29 CFR 1910.134 and 29 CFR 1926.103*.

Any worker who is injured, becomes ill, or develops signs or symptoms of possible over-exposure to hazardous substances or health hazards on this site shall receive a medical examination as soon as possible after the occurrence, with follow-up examinations provided as required by the attending physician. Physical Exams shall be consistent with *29 CFR 1910.120(f) and 29 CFR 1926.65(f)*, and the Ranger Properties, LLC Health and Safety Program, if applicable.

Element 5 - Site Control Program

This Site Control Program is designed to minimize the spread of hazardous substances from contaminated areas to areas that have not been contaminated in compliance with *29 CFR 1910.120(b)(4)(ii)(F) and 29 CFR 1926.65(b)(4)(ii)(F)*. Additionally, the Site Control Program is intended to identify and isolate contaminated areas of the site, to facilitate emergency evacuation and medical care, to prevent unauthorized entry to the site, and to deter vandalism and theft.

This Site Control Program includes the elements specified in *29 CFR 1910.120(d) and 29 CFR 1926.65(d)* and provides the following site-specific information:

- Site Map (included in Attachment 3)
- Site Access Procedures
- Site Security
- Site Work Zones
- Use of the Buddy System
- Both Internal (on-site) and External (off-site) Communications
- Medical Assistance

The Site Supervisor is responsible for ensuring the Site Control Program is updated as needed.

Site Map

A site map(s) indicating the site perimeter, entry and exit points, work zones, emergency equipment storage locations, and evacuation routes and places of safe assembly is included in Attachment 3 of this HASP.

Site Access Procedures

For the safety of all personnel, access to this site is restricted to only those site workers who have access approval from Site Supervisor. To further reduce the potential for chemical exposure, site workers shall only enter into zones in which they have access approval from Site Supervisor.

During hours of site operation, site entry and exit is authorized only at the point(s) identified on the attached map. Entry and exit at these points is controlled by:

- Warning Signs
- Locked Gate

During hours that the site is not operating, access to the site is controlled by:

- Warning Signs
- Locked Gate
- Security Guard

For accountability purposes, all visitors to the site must register with the Site Supervisor. Visitors shall be escorted at all times. Visitors are expected to comply with the requirements of this HASP. Visitors who will enter contaminated areas of the site must provide adequate documentation that they have the required training and medical evaluation as required by this HASP. Visitors shall receive a site-specific briefing about protecting themselves from site hazards, recognizing site zones, and following emergency evacuation procedures.
Visitors shall have the required personal protective equipment (PPE) for the areas that they will visit.

Site Security

The Site Supervisor is responsible for establishing and maintaining site security measures for this site.

Site security at this site is maintained to prevent unauthorized entry; limit the spread of contamination; prevent exposure of unauthorized and unprotected people to site hazards; and minimize vandalism and theft.

Site security is provided at this site by:

- Fences
- Locked Gate

Internal and External Communications

Internal on-site communication will be handled on this site by:

- Face to face
- 2-way radio
- Cell phone

External off-site communication will be handled on this site by:

- 2-way radio
- Cell phone

The following are standard hand signals that will be used on this site:

- Thumbs down = No
- Thumbs up = OK/understood
- Both arms waving upright above head = Need assistance/send support

Medical Assistance

Medical assistance at this site is addressed in Element 10, Emergency Response Plan.

Use of the Buddy System

While working in the hazardous areas, workers use the buddy system. The buddy system is a system of organizing employees into work groups in such a manner that each employee of the work group is designated to be observed by at least one other employee in the work group. The purpose of the buddy system is to provide rapid assistance to employees in the event of an emergency.

The responsibilities of workers using the buddy system include:

- Remaining in close contact with other buddies
- Providing assistance to other buddies as needed or requested
- Observing other buddies for signs of heat stress or other difficulties
- Periodically checking the integrity of buddy's PPE
- Notifying the Site Supervisor, if emergency assistance is needed

Element 6 - Personal Protective Equipment

Personal protective equipment (PPE) will be used at this site to protect employees from biological, chemical and physical hazards in compliance with *29 CFR 1910.120(b)(4)(ii)(C) and 29 CFR 1926.65(b)(4)(ii)(C)*. This includes hazards associated with, but not limited to, entry operations, decontamination processes, and routine site tasks and operations.

With employee safety being the number one priority, site health hazards will be eliminated or reduced to the greatest extent possible through administrative and/or engineering controls and safe work practices. Where hazards are still present, a combination of administrative and/or engineering controls, work practices, and PPE will be used to protect employees.

The Site Supervisor is responsible for PPE use on this

site. The following topics are addressed in this element:

- PPE Selection Criteria
- Site-Specific PPE
- Training in Use of PPE
- Minimum Standards for PPE
- Hearing Conservation
- PPE Maintenance & Storage
- Using PPE at this Site

PPE Selection Criteria

PPE shall be selected and used to protect site workers from the hazards and potential hazards they are likely to encounter, as identified during the site characterization and Job Hazard Analysis (see Attachment 1). A PPE ensemble shall be assigned to each work task or operation.

PPE selection shall be based upon many factors. Initial PPE ensembles shall be selected based on the anticipated route(s) of entry of the hazardous substances on site and their concentration. Ensemble materials shall be selected using permeation data supplied by individual manufacturers. Materials providing the greatest duration of protection shall be used. Tear and seam strength of the PPE shall also be considered to ensure ensemble durability while work is performed.

When necessary, multiple layers of protection shall be used to accommodate the range of hazards that may be encountered. All PPE shall be properly fitted.

PPE selection criteria shall also include:

- Level of PPE required (Level A, B, C, or D)
- PPE components
- Chemical suit and glove compatibility

Other factors that influence the above selection criteria include:

- Work mission and duration
- Climatic considerations
- Personal tolerances

Any changes in PPE selection must be approved by the Site Supervisor.

All PPE ensembles shall be consistent with Appendix B of *29 CFR 1910.120 and 29 CFR 1926.65*, and used in accordance with manufacturers' recommendations.

The following criteria were used to select PPE levels at this site:

Level D Protection was selected due to the following:

- The atmosphere contains no known or suspected hazardous substances at concentrations that meet or exceed the published exposure limits
- Contact with hazardous levels of any chemicals through splashes, immersion, or by other means will not occur
- There is no potential for unexpected inhalation or contact with hazardous levels of any chemical

Site-Specific PPE

Level D Ensemble

Specific Level D ensemble components for the phases, tasks, and locations at this site are listed in the applicable Job Hazard Analysis Worksheet(s) included in Attachment 1 of this HASP.

Training In Use of PPE

Employees receive general training regarding proper selection, use and inspection of PPE during initial HAZWOPER training and subsequent refresher training. Site-specific PPE requirements, including task-specific PPE, ensemble components, cartridge and canister service times, and inspection and maintenance procedures, as applicable, shall be communicated as identified in Element 3, Training Program.

Because chemical exposure levels present do not create a substantial possibility of immediate death, immediate serious illness or injury, or impair the ability to escape, positive pressure self-contained breathing apparatus or positive-pressure air-line respirators equipped with an escape air supply are not required.

Minimum Standards for PPE

If the preliminary site evaluation did not produce sufficient information to identify the hazards or suspected hazards of the site, an ensemble providing equivalent to Level B PPE shall be provided as minimum protection, and direct reading instruments, in accordance with Element 7 of this HASP, will be used as appropriate for identifying IDLH conditions.

Hearing Conservation

Since this site has no noise exposures equal to or exceeding an 8-hour time-weighted average sound level of 85 dBA, site workers are not required to wear hearing protection. If area noise exposure meets or exceeds this level, noise shall be listed as a physical hazard in the Job Hazard Analysis Worksheet and hearing protection (PPE) for the tasks or operation in these areas will be included as one of the control measures. Site workers required to use hearing protection will participate in a Hearing Conservation Program.

PPE Maintenance & Storage

To ensure that PPE continues to provide the anticipated protection, this site uses specific procedures for PPE inspection, cleaning, maintenance, and storage based upon manufacturers' guidelines. Adherence to these procedures is tracked with written inspection records.

Using PPE at This Site

Workers using PPE at this site shall have the proper training and fit testing, as applicable. PPE shall be inspected prior to, during, and after each use.

Element 7 - Environmental Monitoring

This element of the HASP describes how site worker exposures to hazardous substances will be monitored in compliance with *29 CFR 1910.120(b)(4)(ii)(E) and 29 CFR 1926.65(b)(4)(ii)(E)*.

This element addresses:

- Air Monitoring Procedures
- Initial Monitoring Procedures
- Periodic Monitoring
- Direct-Reading Instrument Monitoring Procedures

Air Monitoring Procedures

Exposures to airborne hazardous substances shall be fully characterized throughout site operations to ensure that exposure controls are effectively selected and modified as needed. Air monitoring shall be used to identify and quantify airborne levels of hazardous substances and safety and health hazards to determine the appropriate level of site worker protection needed on site. Air monitoring procedures shall be consistent with OSHA requirements in *29 CFR 1910.120(c)(6) and 29 CFR 1926.65(c)(6)*.

Air monitoring shall be conducted using direct-reading instruments. Air monitoring includes:

- Initial monitoring prior to the beginning of site activities to identify conditions that may cause death or serious harm and to permit preliminary selection of site controls
- Periodic monitoring throughout site operations when conditions and site worker exposures may change rapidly

Initial Monitoring Procedures

Upon initial entry, representative air monitoring shall be conducted to identify any IDLH condition, exposure over permissible exposure limits or published exposure levels, exposure over a radioactive material's dose limits, or other dangerous condition such as the presence of flammable atmospheres or oxygen-deficient environments.

Periodic Monitoring

Periodic monitoring shall be conducted when the possibility of an IDLH condition or flammable atmosphere has developed, or when there is indication that exposure may have risen over permissible exposure limits or published exposure levels since previous monitoring was conducted. Situations where it shall be considered that the possibility exposures have risen are as follows:

- When work begins on a portion of the site that has not been previously monitored
- When contaminants other than those previously identified are being handled
- When a different type of operation is initiated
- When a change in environmental conditions exist
- When site workers handle leaking drums or containers, or work in areas with obvious liquid contamination
- When site workers report or exhibit signs of exposure

Direct-Reading Instrument Monitoring Procedures

Direct-reading instrument monitoring will be used on this site as follows:

- VOCs by photoionization detector (PID)

Monitoring equipment calibration and maintenance procedures on this site are:

Every morning

Element 8 - Spill Containment Program

This element describes the potential for hazardous substance spills at this site and procedures for controlling and containing such spills in compliance with *29 CFR 1910.120(b)(4)(ii)(J) and 29 CFR 1926.65(b)(4)(ii)(J)* and *29 CFR 1910.120(j)(1)(viii) and 29 CFR 1926.65(j)(1)(viii)*. The purpose of the Spill Containment Program is to ensure that spill containment planning is conducted and appropriate control measures are established.

The Spill Containment Program addresses the following site-specific information:

- Potential for Spills and Available Controls
- Initial Notification and Response
- Spill Evaluation and Response
- Post-Spill Evaluation

Potential for Spills and Available Controls

An evaluation was conducted to determine the potential for hazardous substance spills at this site. This evaluation indicates that there is no potential for a hazardous substance spill of sufficient size to require containment planning, equipment, and procedures.

For that reason, no spill containment program is implemented at this site.

Element 9 - Decontamination

This HASP element describes procedures for decontaminating site workers and equipment when exiting the Exclusion Zone in compliance with *29 CFR 1910.120(b)(4)(ii)(G) and 29 CFR 1926.65(b)(4)(ii)(G)*. This element also describes disposal of waste from decontamination processes. Site decontamination procedures are designed to achieve a safe, logical removal or neutralization of contaminants that may accumulate on site workers and/or equipment. The Site Supervisor is responsible for decontamination procedures at this site.

These procedures are intended to minimize site worker contact with contaminants and protect against the transfer of contamination to clean areas of the site and away from the site. They may also extend the useful life of personal protective equipment (PPE) by reducing the amount of time that contaminants contact and permeate or otherwise affect the surfaces of PPE.

Decontamination procedures shall be communicated to site workers, and implemented before any site workers or equipment are permitted to enter areas on site where potential for exposure to hazardous substances exists.

Emergency decontamination procedures are detailed in Element 10, the Emergency Response Plan of this HASP.

The decontamination procedures described below are designed to meet the requirements of *29 CFR 1910.120(k) and 29 CFR 1926.65(k)* and include site-specific information about:

- General and Specific Decontamination Procedures for Personnel and PPE
- General and Specific Decontamination Procedures for Equipment
- Location and Type of Site Decontamination Procedures
- Disposal of Residual Waste from Decontamination
- Monitoring the Effectiveness of Decontamination Procedures

General and Specific Decontamination Procedures for Site Workers and PPE

All site workers and PPE leaving a contaminated area shall be appropriately decontaminated.

General decontamination guidelines for site workers and PPE include:

- Decontamination is required for all site workers exiting a contaminated area. Site workers may only re-enter uncontaminated areas after undergoing the decontamination procedures described in the next section.
- Protective clothing is decontaminated, cleaned, laundered, maintained and/or replaced as needed to ensure its effectiveness.
- PPE used at this site is decontaminated or prepared for proper disposal. Site workers who handle contaminated equipment have been trained in the proper decontamination procedures to avoid hazardous exposure.
- The site requires and trains site workers that if their permeable clothing is splashed or becomes wetted with a hazardous substance, they will immediately exit the work zone, perform applicable decontamination procedures, shower, and change into uncontaminated clothing.

Specific decontamination on this site for site workers and PPE shall be conducted as outlined in the Job Hazard Analysis Worksheets in Attachment 1.

General and Specific Decontamination Procedures for Equipment

All contaminated clothing and equipment leaving a contaminated area shall be appropriately disposed of or decontaminated.

General decontamination guidelines for equipment include:

- Decontamination is required for all equipment exiting a contaminated area. Equipment may only re-enter uncontaminated areas after undergoing specific decontamination as described in the Job Hazard Analysis Worksheets.
- Particular attention is given to decontaminating tires, scoops, and other parts of heavy equipment that are directly exposed to contaminants and contaminated soil.

Specific decontamination for equipment on this site shall be conducted as outlined in the Job Hazard Analysis Worksheets in Attachment 1.

Location and Type of Site Decontamination Procedures

Decontamination shall be performed in areas that will minimize the exposure of uncontaminated site workers or equipment to contaminated site workers or equipment. Decontamination on this site shall be conducted in the Contamination Reduction Zone. The Contamination Reduction Zone acts as a buffer between the Exclusion Zone and Support Zone. The location and design of decontamination stations minimize the spread of contamination beyond these stations.

Disposal of Waste from Decontamination

Procedures for disposal of decontamination waste shall meet applicable local, State, and Federal regulations.

Monitoring the Effectiveness of Decontamination Procedures

Decontamination procedures shall be monitored by a representative of Vektor Consultants, the Site Health and Safety Supervisor, to determine effectiveness. If procedures are found to be deficient, appropriate steps shall be taken to correct any deficiencies.

Element 10 - Emergency Response Plan

This HASP element describes the site-specific Emergency Response Plan in compliance with *29 CFR 1910.120(b)(4)(ii)(H) and 29 CFR 1926.65(b)(4)(ii)(H)*. Specifically, the Emergency Response Plan addresses potential emergencies at this site, procedures for responding to these emergencies, roles and responsibilities during emergency response, and training. This element also describes the provisions this site has made to coordinate its emergency response planning with other contractors on site and with off-site emergency response organizations.

This Emergency Response Plan shall be available for inspection and copying by site workers, their representatives, OSHA personnel, and other governmental agencies with relevant responsibilities as required by *29 CFR 1910.120(l)(1)(i) and 29 CFR 1926.65(l)(1)(i)*.

In accordance with *29 CFR 1910.120(l)(3)(ii) and 29 CFR 1926.65(l)(3)(ii)*, this Emergency Response Plan is a separate element of the HASP.

This Emergency Response Plan, which is consistent with the requirements of *29 CFR 1910.120(l) and 29 CFR 1926.65(l)*, provides the following site-specific information:

- Pre-Emergency Planning
- Personnel Roles, Lines of Authority, and Communication
- Emergency Recognition and Prevention
- Safe Distances and Places of Refuge
- Site Security and Control
- Evacuation Routes and Procedures
- Emergency Decontamination Procedures
- Emergency Medical Treatment and First Aid
- Emergency Alerting and Response Procedures
- Critique of Response and Follow-Up
- Personal Protective Equipment (PPE) and Emergency Equipment

Pre-Emergency Planning

This Emergency Response Plan is compatible and integrated with the disaster, fire and/or emergency response plans of local, state, and federal agencies.

This Emergency Response Plan shall be reviewed periodically and amended as necessary to keep it current with new or changing site conditions or information. This Plan shall be rehearsed regularly as part of the overall training program for site operations.

This site has been evaluated for potential emergency occurrences based on site hazards, the tasks within the work plan, the site topography, and prevailing weather conditions.

Based on this evaluation, the following potential emergencies have been identified:

Type of Emergency	Location(s) of Emergency	Source of Emergency
Heat stress/worker collapses	Site	Excavation

Personnel Roles, Lines of Authority, and Communication

Anyone may activate the Emergency Response Plan; however, Ezgi Karayel (or designated alternate), Site Health and Safety Supervisor, is responsible for implementing the Emergency Response Plan and coordinating emergency response activities on this site. Ezgi Karayel, (or designated alternate) also provides specific direction for emergency action based upon information available regarding the incident and response capabilities, initiates emergency procedures including protection of the public, and ensures appropriate authorities are notified.

In accordance with *29 CFR 1910.38(a) and 29 CFR 1926.35*, in the event of an emergency, site workers are evacuated and do not participate in emergency response activities.

This site relies upon the off-site emergency response organizations listed in the Emergency Response Contact Information list to respond to site emergencies. These organizations are appropriately trained, staffed, and equipped to provide emergency response to this site.

These organizations are contacted at least annually to verify the accuracy of phone numbers and contact names.

Communication on this site will be conducted by the following methods:

- Face to face
- 2-way radio
- Cell phone
- Hand signals

Key Site Personnel

Position	Name	Organization	Phone	Email
Site Supervisor	TBD	Ranger Properties		
Site Health and Safety Supervisor	Ezgi Karayel	Vektor Consultants	(347) 871-0750	ezgi@vektorconsultants.com
Contractor Site Representative	TBD	TBD		
Agency Representative	Myrna Hanna	NYCOER		
Client Contact	Sheldon Stein	Ranger Properties		

Emergency Response Contact Information

Organization	Contact	Address/Location	Phone
FDNY		New York, New York	

Emergency Recognition and Prevention

Emergency recognition and prevention is of the utmost importance on this site. In addition to the minimum training requirements outlined in Element 3, all workers shall receive periodic briefings that cover potential site emergencies and techniques that may be used to prevent such emergencies.

Safe Distances and Places of Refuge

Safe distances and places of refuge used in emergencies shall be shown on the site map and all site workers and site visitors shall be briefed as to these locations.

Site Security and Control

In case of an on-site emergency, site security and control for this site shall be provided by:

- Warning Signs
- Barrier Tape
- Locked Gate

Evacuation Routes and Procedures

Site workers shall always be made aware of evacuation routes and procedures. Appropriate primary and alternate evacuation routes and assembly areas shall be marked on the site map and updated as needed. The routes and assembly areas will be determined by conditions at the time of the evacuation based on wind direction, the location of the hazard source, and other factors as determined by rehearsals and input from onsite personnel.

If an evacuation notice is given, site workers will leave the worksite with their respective buddies, if possible, by way of the nearest exit. Emergency decontamination procedures detailed later in this element will be followed, to the extent practicable, without compromising the safety and health of site workers.

Personnel exiting the site shall gather at a designated assembly point. To determine if everyone has successfully exited the site, personnel will be accounted for at the assembly site. If any worker cannot be accounted for, notification shall be given to a representative of Vektor Consultants, the Site Health and Safety Supervisor, so that appropriate action can be initiated.

Contractors and subcontractors on this site have coordinated their emergency response plans to ensure that these plans are compatible and that source(s) of potential emergencies are recognized, alarm systems are clearly understood, and evacuation routes are accessible to all site workers.

Emergency Decontamination Procedures

Emergency decontamination will be conducted by:

Site Safety Officer will coordinate.

Emergency Medical Treatment and First Aid

This site has 2 workers with current first aid certification assigned to provide first aid during each shift. Because of this practice, the site has an exposure control plan in accordance with OSHA's bloodborne pathogens standard, *29 CFR 1910.1030(c)(1)(i) and 29 CFR 1926.21 & 1926.25*. The site also offers Hepatitis B vaccinations to workers who are assigned to provide first aid. A record of those vaccinations or the employee's declination of the vaccination is kept in her/his medical records file.

Any site worker who requires medical care and/or is transferred to a medical facility shall be accompanied by Hazardous Substance Profiles included in Attachment 2 of this HASP and other applicable information to apprise caregivers of the chemicals and hazards to which the victim has potentially been exposed. The emergency medical care facility for this site is:

New York Presbyterian The Allen Hospital
5141 Broadway, New York, NY
Tel: (212) 932-4000
Monday-Sunday: Open 24 Hours

The route to the facility is shown in on the map included in Attachment 3 of this HASP.

Emergency Alerting and Response Procedures

Upon discovering an emergency situation, personnel shall notify a representative of Vektor Consultants, the Site Health and Safety Supervisor, (or a designated alternate) who will evaluate available information and initiate the appropriate actions. Personnel on this site are notified of emergencies by use of an employee alarm system.

This site uses the following types of communication devices in initiating the employee alarm system.

Communication Device	Location Stored	Method
2-way radio	Site Office	Pick up

This employee alarm system shall meet the requirements of *29 CFR 1910.165 and 29 CFR 1926.159*. This system is designed to notify employees of an emergency situation, to stop work activities if necessary, to lower background noise in order to speed communication, and to begin emergency procedures.

This alarm system shall be tested every Month under normal site operating conditions to ensure that it can effectively alert all persons on site. A log of alarm tests shall be kept by Vektor Consultants, the Site Health and Safety Supervisor.

Critique of Response and Follow-Up

After every emergency incident or evacuation of this site, the Site Supervisor, will evaluate the quality and safety of response activities. Any deficiencies in response actions will be included in a specific follow-up plan and corrected.

This Emergency Response Plan shall be evaluated periodically throughout site operations and updated for accuracy. Changes made to emergency response procedures as the result of rehearsals or actual response incidents shall be recorded in this Plan. Representative of Vektor Consultants, Site Health and Safety Supervisor, shall provide site workers with notification and training on changes to this Plan.

Emergency Equipment and PPE

No emergency equipment is required at this site.

No emergency PPE is required at this site.

Procedures for Handling Emergency Incidents

In case of site emergencies, site workers shall be evacuated per this element and will not participate in emergency response activities.

Site emergencies shall be reported to local, state, and federal governmental agencies as required by those agencies.

Element 11 - Confined Space Entry Procedures

OSHA's General Industry Regulation, 29 CFR 1910.146 *Permit-required confined spaces*, contains requirements for practices and procedures to protect employees in general industry from the hazards of entry into permit-required confined spaces. This regulation does not apply to construction.

OSHA's Construction Safety and Health Regulations Part 1926 do not contain a permit-required confined space regulation. Subpart C, 29 CFR 1926.21 *Safety training and education* specifies training for personnel who are required to enter confined spaces and defines a "confined or enclosed space." These requirements are shown below.

> **§1926.21 Safety training and education. (Partial)**
>
> (b)(6)(i) All employees required to enter into confined or enclosed spaces shall be instructed as to the nature of the hazards involved, the necessary precautions to be taken, and in the use of protective and emergency equipment required. The employer shall comply with any specific regulations that apply to work in dangerous or potentially dangerous areas.
>
> (ii) For purposes of paragraph (b)(6)(i) of this section, "confined or enclosed space" means any space having a limited means of egress, which is subject to the accumulation of toxic or flammable contaminants or has an oxygen deficient atmosphere. Confined or enclosed spaces include, but are not limited to, storage tanks, process vessels, bins, boilers, ventilation or exhaust ducts, sewers, underground utility vaults, tunnels pipelines, and open top spaces more than 4 feet in depth such as pits, tubs, vaults, and vessels.

OSHA's Construction Regulations also contain requirements dealing with confined space hazards in underground construction (Subpart S), underground electric transmission and distribution work (§1926.956), excavations (Subpart P), and welding and cutting (Subpart J).

Further guidance may be obtained from American National Standard ANSI Z117.1-1989, *Safety Requirements for Confined Spaces*. This standard provides minimum safety requirements to be followed while entering, exiting and working in confined spaces at normal atmospheric pressure. This standard does not pertain to underground mining, tunneling, caisson work or other similar tasks that have established national consensus standards.

Element 12 - Standard Operating Procedures (SOPs)

Employees shall follow Ranger Properties, LLC 's Health and Safety Program Standard Operating Procedures (SOPs) in compliance with *29 CFR 1910.120(b)(1)(ii) and 29 CFR 1926.65(b)(1)(ii)*.

Element 13 - Thermal Stress Issues

Based on an analysis of site-specific environmental conditions, workloads, and PPE requirements, a Thermal Stress Prevention Program is not needed at this site for the scope of work covered by this HASP to protect workers from hazards related to heat or cold stress. Should there be a change in environmental conditions, workloads, or PPE, representative of Vektor Consultants, the Site Health and Safety Supervisor, should reevaluate the need for implementation of a Thermal Stress Prevention Program.

Element 14 - Hot Work Requirements

This section of the HASP describes site cutting and/or welding (hot work) operations. The purpose of this chapter is to establish procedures that protect workers from safety and health hazards associated with these operations.

Hot work operations at this site are governed by Ranger Properties, LLC procedures. A copy of these procedures is kept is the following location:

Site Office

Element 15 - Energy Control or LOTO Program

This section of the HASP describes the site-specific hazardous energy control or Lockout/Tagout (LOTO) program. The purpose of this section is to establish the minimum requirements for the lockout of energy isolating devices whenever maintenance or servicing is done on machines or equipment. It shall be used to ensure that the machine or equipment is stopped, isolated from all potentially hazardous energy sources, and locked out before employees perform any servicing or maintenance where the unexpected energization or start-up of the machine or equipment or release of stored energy could cause injury. These procedures are intended to comply with *29 CFR 1910.147 and 1926 Subpart K (Electrical)*.

The person with the overall responsibility for the LOTO program is the Site Supervisor.

Attachment 1

Job Hazard Analysis Worksheets

JOB HAZARD ANALYSIS WORKSHEET			
Phase Description:	All Phases		
Task or Operation:	Construction, Decontamination, Demolition, Excavation, Inspection, Mobilization, Sampling - subsurface soil, Site survey, Traffic control, Welding, cutting, brazing		
Specific Location:	Entire Site		
Task or Operation Start Date(s):	06/01/2019	**Task or Operation Duration:**	24 Months
Date of Hazard Analysis:	03/27/2019		
Job Hazard Analysis Developed by:	EK		
Job Hazard Analysis Reviewed by:	EK		

POTENTIAL HAZARDS DURING THIS TASK and/or OPERATION			
Chemical*	**Physical**	**Biological**	**Radiological**
» Arsenic METAL » LEAD (INORGANIC, DUSTS & FUMES), as Pb	» Demolition Operations » Electrical » Excavation/Trenching Operations » Flammable Liquids - Storage and Use » Hand Tool Use » Heavy Manual Lifting/Moving » Hot Surfaces » Ladder Use » Material Handling » Noise (Sound Pressure Level), dBA » Scaffolding Use » Sharp Objects » Slips/Trips/Falls » Traffic - On or Near Site » Utilities (electrical, gas, water, etc.) - Overhead » Utilities (electrical, gas, water, etc.) - Underground » Welding/Cutting/Burn ing Operations	» Metals	

HAZARD CONTROL MEASURES USED DURING THIS TASK and/or OPERATION	
Administrative Controls:	Log In/Out Sheets
Engineering Controls:	Vapor Barrier System Composite Cover System

PPE Description:

Component	Description
Level A Ensemble	
Boots, chemical-resistant, steel toe and shank	
Gloves, inner, chemical-resistant	
Gloves, outer, chemical-resistant	
Supplied Air Respirator - air-line	
Totally-encapsulating vapor tight chemical protective suit	
Level B Ensemble	
Boots, chemical-resistant, steel toe and shank	
Disposable one-piece hooded chemical resistant splash clothing suit	
Gloves, inner, chemical-resistant	
Gloves, outer, chemical-resistant	

	Supplied Air Respirator - air-line
	Level C Ensemble
	Air purifying respirator - full face
	Boots, chemical-resistant, steel toe and shank
	Coveralls
	Disposable one-piece hooded chemical resistant splash clothing suit
	Escape Mask
	Gloves, inner, chemical-resistant
	Gloves, outer, chemical-resistant
	Level D Ensemble
	Dust Mask
	Escape Mask
Air-Purifying Respirator Cartridge/Canister Change Schedule:	
Decon Procedures for People & Equipment:	Alconox Tap Water Distilled Water
Required Permit(s):	
Other Information:	

*Detailed Chemical Information is listed on attached Hazardous Substance Profiles and/or SDS

Attachment 2

Hazardous Substance Profiles and/or SDS

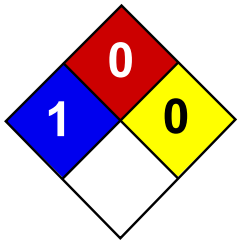

Health	1
Fire	0
Reactivity	0
Personal Protection	E

Material Safety Data Sheet
Lead MSDS

Section 1: Chemical Product and Company Identification

Product Name: Lead

Catalog Codes: SLL1291, SLL1669, SLL1081, SLL1459, SLL1834

CAS#: 7439-92-1

RTECS: OF7525000

TSCA: TSCA 8(b) inventory: Lead

CI#: Not available.

Synonym: Lead Metal, granular; Lead Metal, foil; Lead Metal, sheet; Lead Metal, shot

Chemical Name: Lead

Chemical Formula: Pb

Contact Information:

Sciencelab.com, Inc.
14025 Smith Rd.
Houston, Texas 77396

US Sales: **1-800-901-7247**
International Sales: **1-281-441-4400**

Order Online: ScienceLab.com

CHEMTREC (24HR Emergency Telephone), call: 1-800-424-9300

International CHEMTREC, call: 1-703-527-3887

For non-emergency assistance, call: 1-281-441-4400

Section 2: Composition and Information on Ingredients

Composition:

Name	CAS #	% by Weight
Lead	7439-92-1	100

Toxicological Data on Ingredients: Lead LD50: Not available. LC50: Not available.

Section 3: Hazards Identification

Potential Acute Health Effects: Slightly hazardous in case of skin contact (irritant), of eye contact (irritant), of ingestion, of inhalation.

Potential Chronic Health Effects:
Slightly hazardous in case of skin contact (permeator). CARCINOGENIC EFFECTS: Classified A3 (Proven for animal.) by ACGIH, 2B (Possible for human.) by IARC. MUTAGENIC EFFECTS: Not available. TERATOGENIC EFFECTS: Not available. DEVELOPMENTAL TOXICITY: Not available. The substance may be toxic to blood, kidneys, central nervous system (CNS). Repeated or prolonged exposure to the substance can produce target organs damage.

Section 4: First Aid Measures

Eye Contact:

Check for and remove any contact lenses. In case of contact, immediately flush eyes with plenty of water for at least 15 minutes. Get medical attention if irritation occurs.

Skin Contact: Wash with soap and water. Cover the irritated skin with an emollient. Get medical attention if irritation develops.

Serious Skin Contact: Not available.

Inhalation:
If inhaled, remove to fresh air. If not breathing, give artificial respiration. If breathing is difficult, give oxygen. Get medical attention.

Serious Inhalation: Not available.

Ingestion:
Do NOT induce vomiting unless directed to do so by medical personnel. Never give anything by mouth to an unconscious person. If large quantities of this material are swallowed, call a physician immediately. Loosen tight clothing such as a collar, tie, belt or waistband.

Serious Ingestion: Not available.

Section 5: Fire and Explosion Data

Flammability of the Product: May be combustible at high temperature.

Auto-Ignition Temperature: Not available.

Flash Points: Not available.

Flammable Limits: Not available.

Products of Combustion: Some metallic oxides.

Fire Hazards in Presence of Various Substances: Non-flammable in presence of open flames and sparks, of shocks, of heat.

Explosion Hazards in Presence of Various Substances:
Risks of explosion of the product in presence of mechanical impact: Not available. Risks of explosion of the product in presence of static discharge: Not available.

Fire Fighting Media and Instructions:
SMALL FIRE: Use DRY chemical powder. LARGE FIRE: Use water spray, fog or foam. Do not use water jet.

Special Remarks on Fire Hazards: When heated to decomposition it emits highly toxic fumes of lead.

Special Remarks on Explosion Hazards: Not available.

Section 6: Accidental Release Measures

Small Spill:
Use appropriate tools to put the spilled solid in a convenient waste disposal container. Finish cleaning by spreading water on the contaminated surface and dispose of according to local and regional authority requirements.

Large Spill:
Use a shovel to put the material into a convenient waste disposal container. Finish cleaning by spreading water on the contaminated surface and allow to evacuate through the sanitary system. Be careful that the product is not present at a concentration level above TLV. Check TLV on the MSDS and with local authorities.

Section 7: Handling and Storage

Precautions:
Keep locked up.. Keep away from heat. Keep away from sources of ignition. Empty containers pose a fire risk, evaporate the residue under a fume hood. Ground all equipment containing material. Do not ingest. Do not breathe dust. Wear suitable

protective clothing. If ingested, seek medical advice immediately and show the container or the label. Keep away from incompatibles such as oxidizing agents.

Storage: Keep container tightly closed. Keep container in a cool, well-ventilated area.

Section 8: Exposure Controls/Personal Protection

Engineering Controls:
Use process enclosures, local exhaust ventilation, or other engineering controls to keep airborne levels below recommended exposure limits. If user operations generate dust, fume or mist, use ventilation to keep exposure to airborne contaminants below the exposure limit.

Personal Protection: Safety glasses. Lab coat. Dust respirator. Be sure to use an approved/certified respirator or equivalent. Gloves.

Personal Protection in Case of a Large Spill:
Splash goggles. Full suit. Dust respirator. Boots. Gloves. A self contained breathing apparatus should be used to avoid inhalation of the product. Suggested protective clothing might not be sufficient; consult a specialist BEFORE handling this product.

Exposure Limits:
TWA: 0.05 (mg/m3) from ACGIH (TLV) [United States] TWA: 0.05 (mg/m3) from OSHA (PEL) [United States] TWA: 0.03 (mg/m3) from NIOSH [United States] TWA: 0.05 (mg/m3) [Canada]Consult local authorities for acceptable exposure limits.

Section 9: Physical and Chemical Properties

Physical state and appearance: Solid. (Metal solid.)

Odor: Not available.

Taste: Not available.

Molecular Weight: 207.21 g/mole

Color: Bluish-white. Silvery. Gray

pH (1% soln/water): Not applicable.

Boiling Point: 1740°C (3164°F)

Melting Point: 327.43°C (621.4°F)

Critical Temperature: Not available.

Specific Gravity: 11.3 (Water = 1)

Vapor Pressure: Not applicable.

Vapor Density: Not available.

Volatility: Not available.

Odor Threshold: Not available.

Water/Oil Dist. Coeff.: Not available.

Ionicity (in Water): Not available.

Dispersion Properties: Not available.

Solubility: Insoluble in cold water.

Section 10: Stability and Reactivity Data

Stability: The product is stable.

Instability Temperature: Not available.

Conditions of Instability: Incompatible materials, excess heat

Incompatibility with various substances: Reactive with oxidizing agents.

Corrosivity: Non-corrosive in presence of glass.

Special Remarks on Reactivity:
Can react vigorously with oxidizing materials. Incompatible with sodium carbide, chlorine trifluoride, trioxane + hydrogen peroxide, ammonium nitrate, sodium azide, disodium acetylide, sodium acetylide, hot concentrated nitric acid, hot concentrated hydrochloric acid, hot concentrated sulfuric acid, zirconium.

Special Remarks on Corrosivity: Not available.

Polymerization: Will not occur.

Section 11: Toxicological Information

Routes of Entry: Absorbed through skin. Inhalation. Ingestion.

Toxicity to Animals:
LD50: Not available. LC50: Not available.

Chronic Effects on Humans:
CARCINOGENIC EFFECTS: Classified A3 (Proven for animal.) by ACGIH, 2B (Possible for human.) by IARC. May cause damage to the following organs: blood, kidneys, central nervous system (CNS).

Other Toxic Effects on Humans: Slightly hazardous in case of skin contact (irritant), of ingestion, of inhalation.

Special Remarks on Toxicity to Animals: Not available.

Special Remarks on Chronic Effects on Humans: Not available.

Special Remarks on other Toxic Effects on Humans:
Acute Potential: Skin: Lead metal granules or dust: May cause skin irritation by mechanical action. Lead metal foil, shot or sheets: Not likely to cause skin irritation Eyes: Lead metal granules or dust: Can irritate eyes by mechanical action. Lead metal foil, shot or sheets: No hazard. Will not cause eye irritation. Inhalation: In an industrial setting, exposure to lead mainly occurs from inhalation of dust or fumes. Lead dust or fumes: Can irritate the upper respiratory tract (nose, throat) as well as the bronchi and lungsby mechanical action. Lead dust can be absorbed through the respiratory system. However, inhaled lead does not accumulate in the lungs. All of an inhaled dose is eventually abssorbed or transferred to the gastrointestinal tract. Inhalation effects of exposure to fumes or dust of inorganic lead may not develop quickly. Symptoms may include metallic taste, chest pain, decreased physical fitness, fatigue, sleep disturbance, headache, irritability, reduces memory, mood and personality changes, aching bones and muscles, constipation, abdominal pains, decreasing appetite. Inhalation of large amounts may lead to ataxia, deliriuim, convulsions/seizures, coma, and death. Lead metal foil, shot, or sheets: Not an inhalation hazard unless metal is heated. If metal is heated, fumes will be released. Inhalation of these fumes may cause "fume metal fever", which is characterized by flu-like symptoms. Symptoms may include metallic taste, fever, nausea, vomiting, chills, cough, weakness, chest pain, generalized muscle pain/aches, and increased white blood cell count. Ingestion: Lead metal granules or dust: The symptoms of lead poisoning include abdominal pain or cramps (lead cholic), spasms, nausea, vomiting, headache, muscle weakness, hallucinations, distorted perceptions, "lead line" on the gums, metallic taste, loss of appetite, insomnia, dizziness and other symptoms similar to that of inhalation. Acute poisoning may result in high lead levels in the blood and urine, shock, coma and death in extreme cases. Lead metal foil, shot or sheets: Not an ingestion hazard for usual industrial handling.

Section 12: Ecological Information

Ecotoxicity: Not available.

BOD5 and COD: Not available.

Products of Biodegradation:
Possibly hazardous short term degradation products are not likely. However, long term degradation products may arise.

Toxicity of the Products of Biodegradation: The products of degradation are less toxic than the product itself.

Special Remarks on the Products of Biodegradation: Not available.

Section 13: Disposal Considerations

Waste Disposal:
Waste must be disposed of in accordance with federal, state and local environmental control regulations.

Section 14: Transport Information

DOT Classification: Not a DOT controlled material (United States).

Identification: Not applicable.

Special Provisions for Transport: Not applicable.

Section 15: Other Regulatory Information

Federal and State Regulations:
California prop. 65: This product contains the following ingredients for which the State of California has found to cause cancer, birth defects or other reproductive harm, which would require a warning under the statute: Lead California prop. 65: This product contains the following ingredients for which the State of California has found to cause reproductive harm (female) which would require a warning under the statute: Lead California prop. 65: This product contains the following ingredients for which the State of California has found to cause reproductive harm (male) which would require a warning under the statute: Lead California prop. 65 (no significant risk level): Lead: 0.0005 mg/day (value) California prop. 65: This product contains the following ingredients for which the State of California has found to cause birth defects which would require a warning under the statute: Lead California prop. 65: This product contains the following ingredients for which the State of California has found to cause cancer which would require a warning under the statute: Lead Connecticut hazardous material survey.: Lead Illinois toxic substances disclosure to employee act: Lead Illinois chemical safety act: Lead New York release reporting list: Lead Rhode Island RTK hazardous substances: Lead Pennsylvania RTK: Lead

Other Regulations:
OSHA: Hazardous by definition of Hazard Communication Standard (29 CFR 1910.1200). EINECS: This product is on the European Inventory of Existing Commercial Chemical Substances.

Other Classifications:

WHMIS (Canada): CLASS D-2A: Material causing other toxic effects (VERY TOXIC).

DSCL (EEC):
R20/22- Harmful by inhalation and if swallowed. R33- Danger of cumulative effects. R61- May cause harm to the unborn child. R62- Possible risk of impaired fertility. S36/37- Wear suitable protective clothing and gloves. S44- If you feel unwell, seek medical advice (show the label when possible). S53- Avoid exposure - obtain special instructions before use.

HMIS (U.S.A.):

Health Hazard: 1

Fire Hazard: 0

Reactivity: 0

Personal Protection: E

National Fire Protection Association (U.S.A.):

Health: 1

Flammability: 0

Reactivity: 0

Specific hazard:

Protective Equipment:
Gloves. Lab coat. Dust respirator. Be sure to use an approved/certified respirator or equivalent. Wear appropriate respirator when ventilation is inadequate. Safety glasses.

Section 16: Other Information

References: Not available.

Other Special Considerations: Not available.

Created: 10/10/2005 08:21 PM

Last Updated: 05/21/2013 12:00 PM

The information above is believed to be accurate and represents the best information currently available to us. However, we make no warranty of merchantability or any other warranty, express or implied, with respect to such information, and we assume no liability resulting from its use. Users should make their own investigations to determine the suitability of the information for their particular purposes. In no event shall ScienceLab.com be liable for any claims, losses, or damages of any third party or for lost profits or any special, indirect, incidental, consequential or exemplary damages, howsoever arising, even if ScienceLab.com has been advised of the possibility of such damages.

ISO9001:2000 Certified

Material Safety Data Sheet
Arsenic AA Standard, 1ml=1mg As (1000ppm)

Section 1 - Chemical Product and Company Identification

MSDS Name:
Arsenic AA Standard, 1ml=1mg As (1000ppm)
Catalog Numbers:
LC11500
Synonyms:

Company Identification:
LabChem Inc
200 William Pitt Way
Pittsburgh, PA 15238
Company Phone Number:
(412) 826-5230
Emergency Phone Number:
(800) 424-9300
CHEMTREC Phone Number:
(800) 424-9300

Section 2 – Composition, Information on Ingredients

CAS#	Chemical Name:	Percent
7732-18-5	Water	balance
1327-53-3	Arsenic trioxide	<1
7647-01-0	Hydrochloric acid	4-5

Section 3 - Hazards Identification

Emergency Overview

Appearance: *Clear, colorless solution*

Caution! Corrosive. Toxic. May cause severe eye, skin, respiratory and gastrointestinal tract irritation or burns. Contains inorganic arsenic, which is a cancer hazard. May cause lung, liver, and kidney damage. May cause adverse reproductive and fetal effects. May cause blood abnormalities, central nervous system effects, and cardiac disturbances.

Target Organs: *Kidneys, central nervous system, liver, lungs, cardiovascular system, red blood cells, skin, respiratory and gastrointestinal systems, teeth.*

Potential Health Effects

Eye:
May cause irreversible eye injury, photophobia, tearing, edema, corneal ulceration, burns, and deep tissue necrosis.

Skin:
May cause severe skin irritation. Dermal burns may occur depending on duration of contact.

Ingestion:
May be fatal if swallowed. Causes severe digestive tract burns with abdominal pain, vomiting, and possible death. May cause hemorrhaging of the digestive tract, throat constriction, nausea, diarrhea, convulsions, coma, and death.

Inhalation:
May cause severe respiratory tract irritation, coughing, choking, headache, dizziness, and weakness.

Chronic:
Arsenic trioxide may cause cancer in humans. Other long-term effects include anemia, liver and kidney damage, and nervous system effects such as numbness, tingling, burning pain, weakness, and incoordination.

Section 4 - First Aid Measures

Eyes:
Immediately flush eyes with plenty of water for at least 15 minutes, occasionally lifting the upper and lower eyelids. Get medical aid at once.

Skin:
Immediately flush skin with plenty of water for at least 15 minutes while removing contaminated clothing and shoes. Wash clothing before reuse. Get medical aid.

Ingestion:
Call a poison control center. If swallowed, do not induce vomiting unless directed to do so by medical personnel. Give conscious victim 2-4 glasses of water to dilute acid. Never give anything by mouth to an unconscious person. Get medical aid at once.

Inhalation:
Remove from exposure and move to fresh air immediately. If not breathing, give artificial respiration. If breathing is difficult, give oxygen. Get medical aid.

Notes to Physician:
Treat symptomatically and supportively. Do not use sodium bicarbonate in an attempt to neutralize the acid.

Section 5 - Fire Fighting Measures

General Information:
As in any fire, wear a self-contained breathing apparatus in pressure-demand, MSHA/NIOSH (approved or equivalent), and full protective gear. Combustion generates irritating and toxic fumes. Move container if possible. Avoid breathing vapors or dust.

Extinguishing Media:
For small fires, use dry chemical, carbon dioxide, water spray, or alcohol-resistant foam.

Autoignition Temperature:
Not applicable

Flash Point:
Not applicable

NFPA Rating:
CAS# 7732-18-5: Health- 0, Flammability- 0, Instability- 0
CAS# 1327-53-3: Health- 3, Flammability- 0, Instability- 0
CAS# 7647-01-0: Health- 3, Flammability- 0, Instability- 1

Explosion Limits:
Lower: n/a Upper: n/a

Material Safety Data Sheet
Arsenic AA Standard, 1ml=1mg As (1000ppm)

Section 6 - Accidental Release Measures

General Information:

Use proper personal protective equipment as indicated in Section 8.

Spills/Leaks:

Absorb spills with absorbent (vermiculite, sand, diatomaceous earth) and place in labeled containers for later disposal. Material may be carefully neutralized with lime (calcium oxide.)

Section 7 - Handling and Storage

Handling:

Wash thoroughly after handling. Avoid breathing dust, vapor, mist, or gas. Avoid contact with eyes, skin, or clothing.

Storage:

Store capped at room temperature. Protect from heat and incompatibles. Do not store in metal containers.

Section 8 - Exposure Controls, Personal Protection

Engineering Controls:

Facilities storing or utilizing this material should be equipped with an eyewash facility and a safety shower. Use adequate ventilation to keep airborne concentrations below the permissible exposure limits.

Exposure Limits:

Chemical Name:	ACGIH	NIOSH	OSHA
Water	none listed	none listed	none listed
Arsenic trioxide	0.01 mg/m3 TWA (as Arsenic), listed under Arsenic, inorganic compounds	5 mg/ml IDLH (as Arsenic), listed under Arsenic, inorganic compounds	10 µg/m3 TWA (as Arsenic), listed under Arsenic, inorganic compounds (see 29 CFR 1910.1018)
Hydrochloric acid	2 ppm Ceiling	50 ppm IDLH	5 ppm Ceiling; 7 mg/m3 Ceiling

OSHA Vacated PELs:

None listed

Personal Protective Equipment

Eyes:

Wear appropriate protective eyeglasses or chemical safety goggles as described by OSHA's eye and face protection regulations in 29 CFR 1910.133 or European Standard EN166.

Skin:

Wear appropriate gloves to prevent skin exposure.

Clothing:

Wear appropriate protective clothing to prevent skin exposure.

Respirators:

Follow the OSHA respirator regulations found in 29 CFR 1910.134 or European Standard EN 149. Use a NIOSH/MSHA or European Standard EN 149 approved respirator if exposure limits are exceeded or if irritation or other symptoms are experienced.

Section 9 - Physical and Chemical Properties

Physical State:	Liquid
Color:	Colorless
Odor:	Slight pungent odor
pH:	Acidic
Vapor Pressure:	Not available
Vapor Density:	Not available
Evaporation Rate:	Not available
Viscosity:	Not available
Boiling Point:	Not available
Freezing/Melting Point:	Not available
Decomposition Temperature:	Not available
Solubility in water:	Soluble
Specific Gravity/Density:	1.0-1.1
Molecular Formula:	Not applicable
Molecular Weight:	Not applicable

Section 10 - Stability and Reactivity

Chemical Stability:

Stable under normal temperatures and pressures.

Conditions to Avoid:

Incompatible materials, excess heat.

Incompatibilities with Other Materials:

Oxidizing agents, hydrogen fluoride, bases, metals.

Hazardous Decomposition Products:

Oxides of arsenic, arsine, hydrogen chloride, chlorine, hydrogen gas.

Hazardous Polymerization:

Has not been reported.

Section 11 - Toxicological Information

RTECS:

CAS# 7732-18-5: ZC0110000
CAS# 1327-53-3: CG3325000
CAS# 7647-01-0: MW4025000, MW4031000

LD50/LC50:

CAS# 7732-18-5:
Oral, rat: LD50 = >90 mL/kg.
CAS# 1327-53-3:
Oral, mouse: LD50 = 31500 ug/kg
Oral, rabbit: LD50 = 20190 ug/kg

Oral, rat: LD50 = 14600 ug/kg.

CAS# 7647-01-0:

Inhalation, rat: LC50 = 3124 ppm/1H

Oral, rabbit: LD50 = 900 mg/kg

Carcinogenicity:

CAS# 7732-18-5: Not listed as a carcinogen by ACGIH, IARC, NIOSH, NTP, OSHA, or CA Prop 65.

CAS# 1327-53-3: Listed as a carcinogen by ACGIH, IARC, NTP, and CA Prop 65.

ACGIH: A1 – Confirmed Human Carcinogen

California: Carcinogen, initial date 2/27/87 (listed as Arsenic, inorganic compounds)

NTP: Known carcinogen

IARC: Group 1 carcinogen

CAS# 7647-01-0: Not listed as a carcinogen by ACGIH, IARC, NIOSH, NTP, OSHA, or CA Prop 65.

Epidemiology:

Exposure to inorganic arsenic compounds has been causally associated with the development of cancer, primarily of the skin and lungs.

Teratogenicity:

Teratogenic effects, including exencephaly, skeletal defects, and genitourinary system defects, of arsenic compounds administered intravenously or intraperitoneally to high doses have been demonstrated in hamsters, rats and mice.

Reproductive:

May cause reproductive effects.

Mutagenicity:

No information found

Neurotoxicity:

No information found

Section 12 - Ecological Information

The half-life of arsenic trioxide in soil is 6.5 years. Arsenic tends to bioaccumulate.

Section 13 - Disposal Considerations

Dispose of in accordance with Federal, State, and local regulations.

Section 14 - Transport Information

US DOT

Shipping Name:	Hydrochloric acid solution
Hazard Class:	8
UN Number:	UN1789
Packing Group:	PGII

Material Safety Data Sheet
Arsenic AA Standard, 1ml=1mg As (1000ppm)

Section 15 - Regulatory Information

US Federal

TSCA:

CAS# 7732-18-5 is listed on the TSCA Inventory.
CAS# 1327-53-3 is listed on the TSCA Inventory.
CAS# 7647-01-0 is listed on the TSCA Inventory.

SARA Reportable Quantities (RQ):

CAS# 1327-53-3: final RQ = 1 pound (0.454 kg)
CAS# 7647-01-0: final RQ = 5000 pounds (2270 kg)

CERCLA/SARA Section 313:

This material contains Arsenic trioxide (listed as Arsenic, inorganic compounds), <1%, (CAS# 1327-53-3) which is subject to the reporting requirements of Section 313 of SARA Title III and 40 CFR Part 373.

This material contains Hydrogen chloride, 4-5%, (CAS# 7647-01-0), which is subject to the reporting requirements of Section 313 of SARA Title III and 40 CFR Part 373.

OSHA - Highly Hazardous:

None of the chemicals in this product are considered highly hazardous by OSHA.

US State

State Right to Know:

Arsenic trioxide can be found on the following state Right-to-Know lists: California, New Jersey, Florida, Pennsylvania, Massachusetts, Minnesota (listed as Arsenic, inorganic compounds).
Hydrochloric acid can be found on the following state Right-to-Know lists: California, New Jersey, Florida, Pennsylvania, Minnesota, Massachusetts.

California Regulations:

WARNING: This product contains Arsenic trioxide, listed as `Arsenic, inorganic compounds', a chemical known to the state of California to cause cancer and developmental reproductive toxicity.

European/International Regulations

Canadian DSL/NDSL:

CAS# 7732-18-5 is listed on Canada's DSL List.
CAS# 1327-53-3 is listed on Canada's DSL List.
CAS# 7647-01-0 is listed on Canada's DSL List.

Canada Ingredient Disclosure List:

CAS# 7732-18-5 is not listed on Canada's Ingredient Disclosure List.
CAS# 1327-53-3 is listed on Canada's Ingredient Disclosure List.
CAS# 7647-01-0 is listed on Canada's Ingredient Disclosure List.

Section 16 - Other Information

MSDS Creation Date: August 21, 2008
Revision Date: August 29, 2008

Information in this MSDS is from available published sources and is believed to be accurate. No warranty, express or implied, is made and LabChem Inc. assumes no liability resulting from the use of this MSDS. The user must determine suitability of this information for his application.

Attachment 3

Figures and Maps

Directions to Hospital

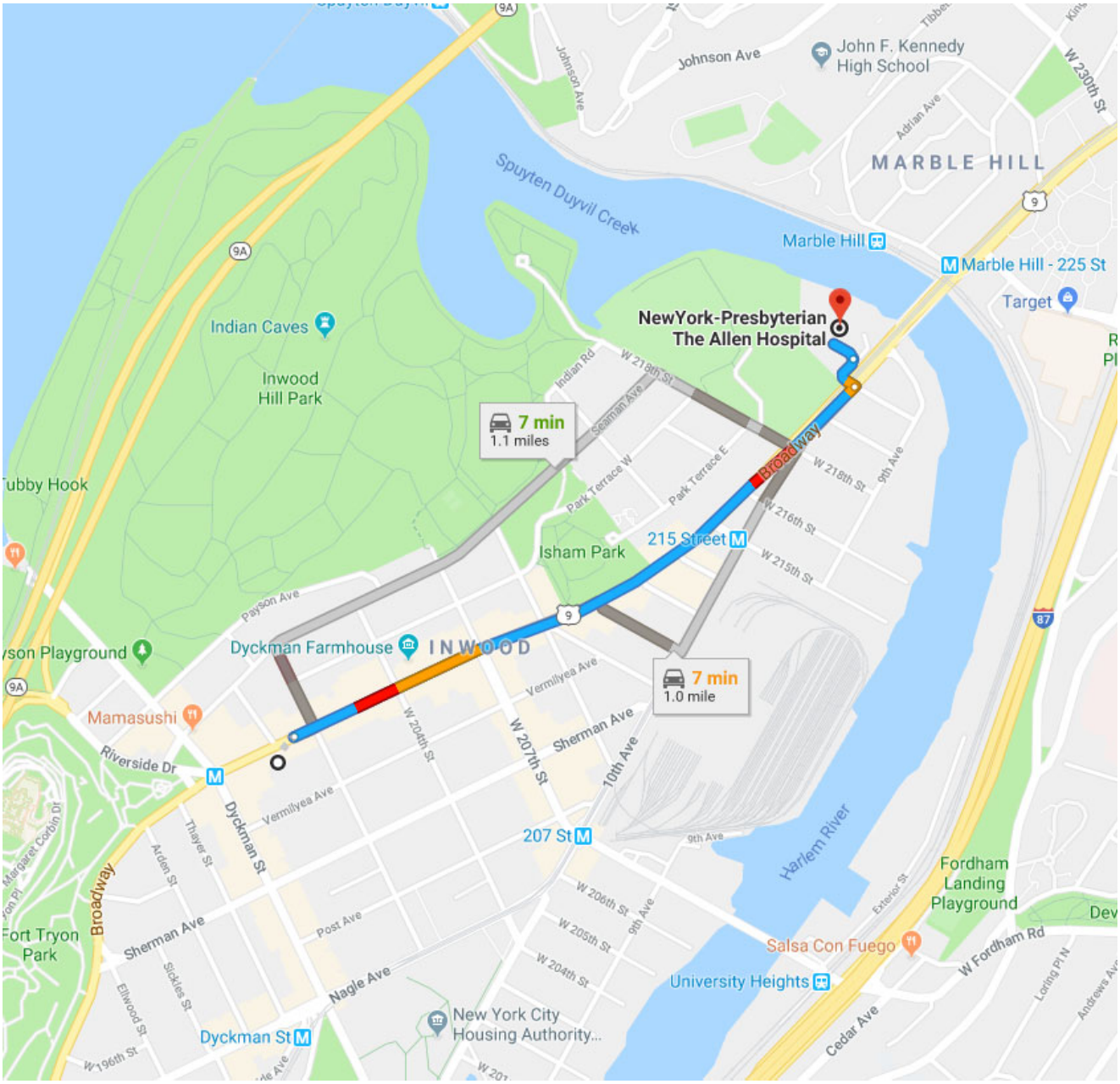

4790 Broadway
New York, NY 10034

Head northeast on Broadway toward Academy St
Pass by CTown Supermarkets (on the right in 0.2 mi)

0.8 mi

Turn left onto W 220th St

236 ft

Turn left
Destination will be on the right

164 ft

NewYork-Presbyterian The Allen Hospital
5141 Broadway, New York, NY 10034

APPENDIX 6

MANUFACTURER SPECIFICATIONS FOR VAPOR BARRIER SYSTEM

Stego® Wrap 20-Mil Vapor Barrier

STEGO INDUSTRIES, LLC

Vapor Retarders
07 26 00, 03 30 00

1. Product Name

Stego Wrap 20-Mil Vapor Barrier

2. Manufacturer

Stego Industries, LLC
216 Avenida Fabricante, Suite 101
San Clemente, CA 92672
Sales, Technical Assistance
Ph: (877) 464-7834
Fx: (949) 257-4113
www.stegoindustries.com

3. Product Description

USES: Stego Wrap 20-Mil Vapor Barrier is used as a below-slab vapor barrier, and as a protection course for below grade waterproofing applications.
COMPOSITION: Stego Wrap 20-Mil Vapor Barrier is a multi-layer plastic extrusion manufactured with only the highest grade of prime, virgin, polyolefin resins.
ENVIRONMENTAL FACTORS:
Stego Wrap 20-Mil Vapor Barrier can be used in systems for the control of soil gases (radon, methane), soil poisons (oil by-products) and sulfates.

5. Installation

UNDER SLAB: Unroll Stego Wrap 20-Mil Vapor Barrier over an aggregate, sand or tamped earth base. Overlap all seams a minimum of six inches and tape using Stego Tape or Crete Claw® Tape. All penetrations must be sealed using a combination of Stego Wrap and Stego accessories.

For additional information, please refer to Stego's complete installation instructions.

6. Availability & Cost

Stego Wrap 20-Mil Vapor Barrier is available nationally via building supply distributors. For current cost information, contact your local Stego Wrap distributor or Stego Industries' sales department.

7. Warranty

Stego Industries, LLC believes to the best of its knowledge, that specifications and recommendations herein are accurate and reliable. However, since site conditions are not within its control, Stego Industries does not guarantee results from the use of the information provided and disclaims all liability from any loss or damage. NO WARRANTY, EXPRESS, IMPLIED OR STATUTORY, IS GIVEN AS TO THE MERCHANTABILITY, FITNESS FOR A PARTICULAR PURPOSE, OR OTHERWISE WITH RESPECT TO THE PRODUCTS REFERRED TO. Please see www.stegoindustries.com/legal.

8. Maintenance

None required.

9. Technical Services

Technical advice, custom CAD drawings, and additional information can be obtained by contacting Stego Industries' technical assistance department or via the website.

10. Filing Systems

- www.stegoindustries.com

4. Technical Data

TABLE 1: PHYSICAL PROPERTIES OF STEGO WRAP 20-MIL VAPOR BARRIER

PROPERTY	TEST	RESULTS
Under Slab Vapor Retarders	ASTM E1745 Class A, B & C – Standard Specification for Water Vapor Retarders Used in Contact with Soil or Granular Fill under Concrete Slabs	Exceeds Class A, B & C
Water Vapor Permeance	ASTM F1249 – Test Method for Water Vapor Transmission Rate Through Plastic Film and Sheeting Using a Modulated Infrared Sensor	0.0071 perms
Puncture Resistance	ASTM D1709 – Test Methods for Impact Resistance of Plastic Film by Free-Falling Dart Method	3500+ grams*
Tensile Strength	ASTM D882 – Test Method for Tensile Properties of Thin Plastic Sheeting	97.7 lbf/in.
Permeance After Conditioning (ASTM E1745 Sections 7.1.2 - 7.1.5)	ASTM E154 Section 8, F 1249 – Permeance after wetting, drying, and soaking ASTM E154 Section 11, F 1249 – Permeance after heat conditioning ASTM E154 Section 12, F 1249 – Permeance after low temperature conditioning ASTM E154 Section 13, F 1249 – Permeance after soil organism exposure	0.0088 perms 0.0081 perms 0.0084 perms 0.0077 perms
Radon Diffusion Coefficient	K124/02/95	9.9 x 10^{-12} m^2/second
Thickness		20 mils
Roll Dimensions		14 ft. wide x 105 ft. long or 1,470 ft^2
Roll Weight		140 lbs.

Note: perm unit = grains/(ft^2 *hr* in.Hg)
* The material maxed out the testing equipment and did not fail at 3746 grams.

Stego, the stegosaurus design logo[s], Crete Claw, StegoTack, StegoCrawl, Beast, and the Beast design logo are all deemed to be registered and/or protectable trademarks or service marks of Stego Industries, LLC. © 2016 Stego Industries, LLC. All Rights Reserved. Please see www.stegoindustries.com/legal. 5/2016

Stego® Mastic

STEGO INDUSTRIES, LLC

Vapor Retarders
07 26 00, 03 30 00

1. Product Name
Stego Mastic

2. Manufacturer
Stego Industries, LLC
216 Avenida Fabricante, Suite 101
San Clemente, CA 92672
Sales, Technical Assistance
Ph: (877) 464-7834
Fx: (949) 257-4113
www.stegoindustries.com

3. Product Description
USES: Stego Mastic is designed to be used as a waterproofing and vapor retardant membrane for use in conjunction with Stego Wrap 10-mil and 15-mil Vapor Retarder/Barrier. Stego Mastic can be used as an alternate to boots for pipe penetrations in Stego Wrap Vapor Barrier.
COMPOSITION: Stego Mastic is a medium-viscosity, water-based, polymer-modified anionic bituminous/asphalt emulsion.
SIZE: Stego Mastic comes in two-gallon and five-gallon buckets.

4. Technical Data
APPLICABLE STANDARDS:
American Society for Testing and Materials (ASTM)

- ASTM D412 Standard Test Method for Vulcanized Rubber and Thermoplastic Elastomers - Tension
- ASTM E154 Standard Test Methods for Water Vapor Retarders Used in Contact with Earth under Concrete Slabs, on Walls, or as Ground Cover
- ASTM E96 Standard Test Methods for Water Vapor Transmission of Materials
- ASTM D751 Standard Test Methods for Coated Fabrics
- ASTM D1434 Standard Test Method for Determining Gas Permeability Characteristics of Plastic Film and Sheeting
- ASTM C836 Standard Specification for High Solids Content, Cold Liquid-Applied Elastomeric Water-proofing Membrane for Use with Separate Wearing Course.
- ASTM E1643 Standard Practice for Installation of Water Vapor Retarders Used in Contact with Earth or Granular Fill under Concrete Slabs.

5. Installation
PREPARATION:

- A test application simulating the project environment should always be done prior to final usage of Stego Mastic.
- All Surfaces should be dry and free of loose materials, oils and other contaminants. The surfaces should be cleaned in the same fashion as the test surface in order to ensure proper results.
- Store above 40°F, and apply above 40°F and below 100°F.

PENETRATIONS:
To repair penetrations in Stego Wrap, cut Stego Wrap just big enough to fit over and around the penetration so as to minimize void space. Liberally apply Stego Mastic around the penetration to keep the integrity of the membrane intact. Stego Mastic can be applied by brush, roller, or trowel.
NOTES: 1) For larger penetrations or wide cut-outs of Stego Wrap, use Stego Wrap and Stego Tape to repair and seal. 2) Solvent-based products should not be applied over this product. 3) Clean all tools with kerosene and/or oil-based cleaners.

For additional information, please refer to Stego's complete installation instructions.

6. Availability & Cost
Stego Mastic is available nationally via building supply distributors. For current cost information, contact your local Stego distributor or Stego Industries' sales department.

7. Warranty
Stego Industries, LLC believes to the best of its knowledge, that specifications and recommendations herein are accurate and reliable. However, since site conditions are not within its control, Stego Industries does not guarantee results from the use of the information provided and disclaims all liability from any loss or damage. NO WARRANTY, EXPRESS, IMPLIED OR STATUTORY, IS GIVEN AS TO THE MERCHANTABILITY, FITNESS FOR A PARTICULAR PURPOSE, OR OTHERWISE WITH RESPECT TO THE PRODUCTS REFERRED TO. Please see www.stegoindustries.com/legal.

8. Maintenance
None required.

9. Technical Services
Technical advice, custom CAD drawings, and additional information can be obtained by contacting Stego Industries' technical assistance department or by visiting the website.

10. Filing Systems
- www.stegoindustries.com
- Buildsite

TABLE 1: PHYSICAL PROPERTIES OF STEGO MASTIC

Property and Test	Stego Mastic
Tensile/Elongation, ASTM D412	32 psi / 3860%
Resistance to Decay, ASTM E154	10% perm loss
Permeance, ASTM E96	0.17 Perms
Hydrostatic Water Pressure, ASTM D751	28 psi
Adhesion to Concrete & Masonry, ASTM C836	7 lbf./in.
Hardness, ASTM C836	75
Crack Bridging, ASTM C836	No Cracking
Low Temp Flexibility, ASTM C836	No Cracking

Note: perm unit = grains/(ft^2 *hr* in.Hg)

Stego, the stegosaurus design logo[s], Crete Claw, StegoTack, StegoCrawl, Beast, and the Beast design logo are all deemed to be registered and/or protectable trademarks or service marks of Stego Industries, LLC. © 2016 Stego Industries, LLC. All Rights Reserved. Please see www.stegoindustries.com/legal. 5/2016

Stego® Tape

STEGO INDUSTRIES, LLC

Vapor Retarders
07 26 00, 03 30 00

1. Product Name
Stego Tape

2. Manufacturer
Stego Industries, LLC
216 Avenida Fabricante, Suite 101
San Clemente, CA 92672
Sales, Technical Assistance
Ph: (877) 464-7834
Fx: (949) 257-4113
www.stegoindustries.com

3. Product Description
USES: Stego Tape is a low permeance tape designed for protective sealing, hanging, seaming, splicing, and patching applications where a highly conformable material is required. It has been engineered to bond specifically to Stego Wrap, making it ideal for sealing Stego Wrap seams and penetrations.
COMPOSITION: Stego Tape is composed of polyethylene film and an acrylic, pressure-sensitive adhesive.
SIZE: Stego Tape is 3.75" wide and 180' long. Stego Tape ships 12 rolls in a case.

4. Technical Data
APPLICABLE STANDARDS:
Pressure Sensitive Tape Council (PSTC)
- PSTC 101 – International Standard for Peel Adhesion of Pressure Sensitive Tape

American Society for Testing & Materials (ASTM)
- ASTM E1643 - Standard Practice for Selection, Design, Installation, and Inspection of Water Vapor Retarders Used in Contact with Earth or Granular Fill under Concrete Slabs

5. Installation
SEAMS:
Overlap Stego Wrap six inches and seal with Stego Tape. Make sure the area of adhesion is free from dust, dirt, moisture and frost to allow maximum adhesion of the pressure sensitive tape.

PIPE PENETRATION SEALING
1) Install Stego Wrap around pipe by slitting/cutting material
2) If void space around pipe is minimal, seal around base of pipe with Stego Tape (Stego Mastic can be used for additional coverage)

DETAIL PATCH FOR PIPE PENETRATION SEALING
1) Cut a piece of Stego Wrap that creates a six inch overlap around all edges of the void space
2) Cut an "X" in the center of the detail patch
3) Slide detail patch over pipe, secure tightly
4) Tape down all sides of detail patch with Stego Tape
5) Seal around base of pipe with Stego Tape (Stego Mastic can be used for additional coverage)

Stego Tape should be installed above 40°F. In temperatures below 40°F, take extra care to remove moisture or frost from the area of adhesion.

For additional information, please refer to Stego's complete installation instructions.

6. Availability & Cost
Stego Tape is available nationally via building supply distributors. For current cost information, contact your local Stego distributor or Stego Industries' sales department.

7. Warranty
Stego Industries, LLC believes to the best of its knowledge, that specifications and recommendations herein are accurate and reliable. However, since site conditions are not within its control, Stego Industries does not guarantee results from the use of the information provided and disclaims all liability from any loss or damage. NO WARRANTY, EXPRESS, IMPLIED OR STATUTORY, IS GIVEN AS TO THE MERCHANTABILITY, FITNESS FOR A PARTICULAR PURPOSE, OR OTHERWISE WITH RESPECT TO THE PRODUCTS REFERRED TO. Please see www.stegoindustries.com/legal.

8. Maintenance
None required.

9. Technical Services
Technical advice, custom CAD drawings, and additional information can be obtained by contacting Stego Industries' technical assistance department or by visiting the website.

10. Filing Systems
- www.stegoindustries.com
- Buildsite

TABLE 1: PHYSICAL PROPERTIES OF STEGO TAPE

PROPERTY	RESULTS
Total Thickness	6 mils
Permeance	0.03 perms
Tensile Strength	17 lbs./in. width
Elongation (at break) MD	1060%
Adhesion (20 min dwell ss, PSTC 101)	84-oz./in. width
Ultraviolet Resistance	Excellent

Stego, the stegosaurus design logo[s], Crete Claw, StegoTack, StegoCrawl, Beast, and the Beast design logo are all deemed to be registered and/or protectable trademarks or service marks of Stego Industries, LLC. © 2016 Stego Industries, LLC. All Rights Reserved. Please see www.stegoindustries.com/legal. 5/2016

STEGO® CRETE CLAW® TAPE

Stego Crete Claw® Tape provides an innovative and economical way to secure plastic film to concrete while the concrete is still wet.

Crete Claw is a multi-layered tape/detail strip that will mechanically lock Stego Wrap Vapor Barrier to concrete. The patented design allows wet concrete to cast into the textured surface of Crete Claw. Just stick Crete Claw to Stego Wrap prior to concrete placement, then place the concrete directly over the system.

Stego Crete Claw can be used in place of Stego Tape to seal joints in Stego Wrap Vapor Barrier providing a dual purpose and helping to offset costs.

The patented design allows wet concrete to cast into the textured surface of Crete Claw

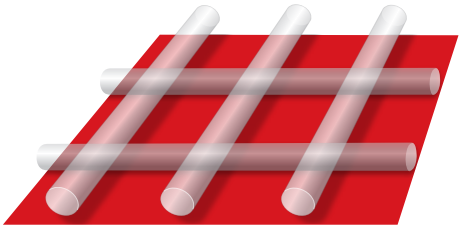

ANGLED TOP VIEW

MOST COMMON APPLICATIONS FOR CRETE CLAW®		6" Wide	3" Wide
ASTM E1643 - Forming seal to the slab at perimeter		✓	✓
Securing Stego Wrap to bottom of slab for expansive/settling soils and carton/void form applications	Perimeter	✓	
	Seams	✓	

- Quick and easy to install
- Saves time and money
- Innovative Solution to help meet ASTM E1643

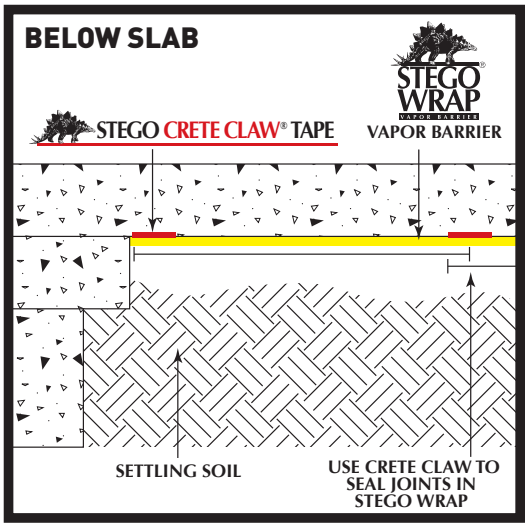

Other more expensive products rely on chemical reaction or geotextile to bond with concrete making it all but impossible to properly install the vapor barrier. Often in pursuit of the all-in-one product, the performance characteristics of the vapor barrier are compromised. Because Crete Claw Tape is applied as a separate accessory to the vapor barrier, it does not interfere with the ability to detail around penetrations or repair damaged areas.

TABLE 1: CRETE CLAW TAPE TEST RESULTS

PROPERTY	TEST	RESULTS
Total Thickness		26 mils
Permeance	ASTM F1249	0.03 perms
180° Adhesion Peel Strength	ASTM D903	17.6 lbf/in.
Sheer Adhesion Strength	1 in.^{2} shear test using an Instron 3345 Machine	>49 lbf/in.^{2}*
Roll Sizes		6" x 180' and 3" x 180' **

* Specimens failed by stretching vapor barrier to failure before pulling Crete Claw from concrete.
** 3" wide is for perimeter seal application only.

Contact us to learn more about this innovative product.

STEGO INDUSTRIES, LLC | San Clemente, CA | 949-257-4100 | Toll Free 877-464-7834 | Fax 949-257-4113 | www.stegoindustries.com

Stego, the stegosaurus design logo[s], Crete Claw, StegoTack, StegoCrawl, Beast, and the Beast design logo are all deemed to be registered and/or protectable trademarks or service marks of Stego Industries, LLC. © 2016 Stego Industries, LLC. All Rights Reserved. Please see www.stegoindustries.com/legal. 5/2016

STEGO® CRETE CLAW® TAPE

INSTALLATION INSTRUCTIONS

TOP-DOWN VIEWS OF A BUILDING FOOTPRINT

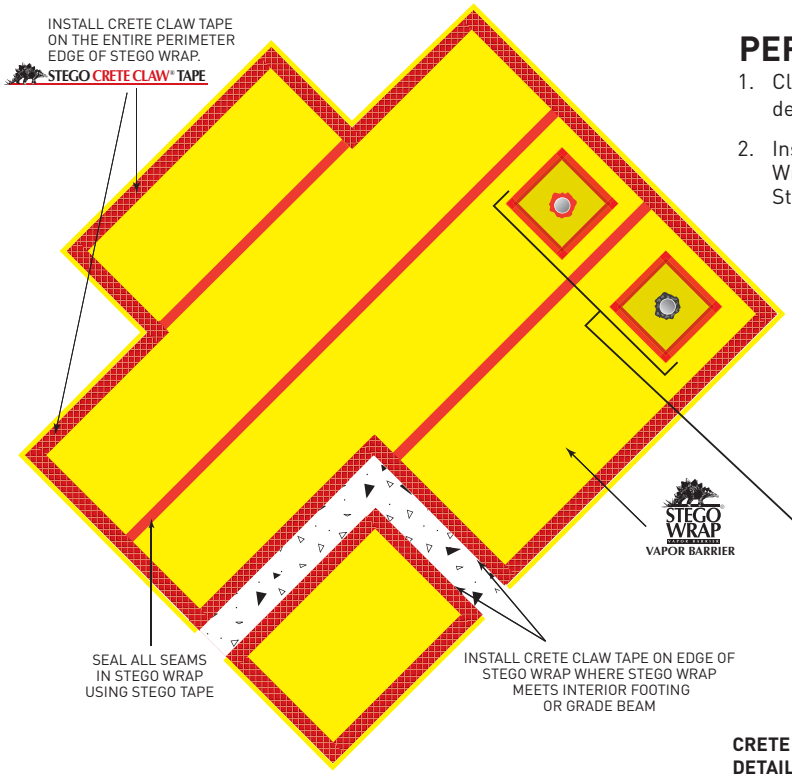

PERIMETER SEAL TO SLAB

1. Clean surface of Stego Wrap to ensure that it is free of moisture and debris prior to the installation of Crete Claw Tape.
2. Install 3" or 6" Crete Claw Tape on the entire perimeter of the Stego Wrap Installation. Crete Claw Tape should be completely on Stego Wrap.

SEAL ALL PENETRATIONS WITH STEGO TAPE AND/OR STEGO MASTIC. CRETE CLAW TAPE IS NOT MEANT FOR REPAIRING PENETRATIONS.

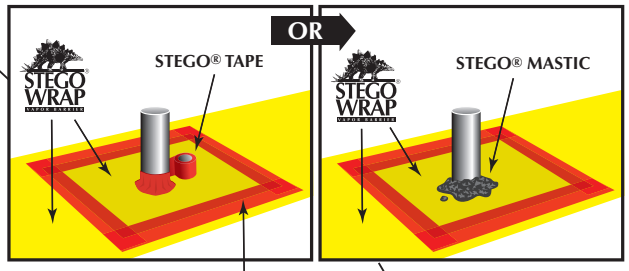

CRETE CLAW CAN BE USED TO SEAL SEAM AROUND DETAIL PATCH FOR ADDED PROTECTION.

SECURING STEGO WRAP TO THE BOTTOM OF THE SLAB

1. Clean surface of Stego Wrap to ensure that it is free of moisture and debris prior to the installation of 6" wide Crete Claw Tape.
2. Overlap seams a minimum of 6 inches. Seal all seams in Stego Wrap using Crete Claw Tape.
3. Install 6" wide Crete Claw Tape on the entire perimeter of the Stego Wrap Installation. Crete Claw Tape should be completely on Stego Wrap.
4. Install additional Crete Claw Tape if required. Lab and simulated field tests have shown that if 6" wide Crete Claw is installed on all seams and around the perimeter, then it is more than strong enough to support Stego Wrap. If determined by the architect or engineer, additional Crete Claw may be specified.
5. Prior to the placement of concrete, ensure that Crete Claw is free of dirt or debris to ensure maximum bond to the concrete.

These are general instructions. Installation requirements may change on a project-by-project basis

IMPORTANT - For the application of securing Stego Wrap to the bottom of the slab, always use 6" wide Crete Claw Tape.

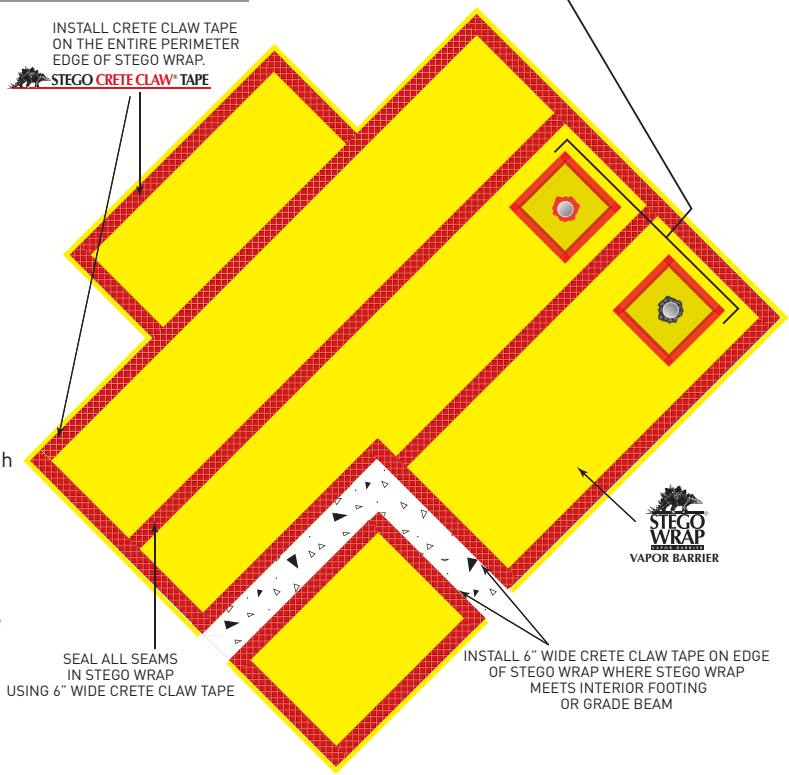

NOTE: Stego Industries, LLC's ("Stego") installation instructions are based on ASTM E1643 - *Standard Practice for Selection, Design, Installation, and Inspection of Water Vapor Retarders Used in Contact with Earth or Granular Fill Under Concrete Slabs*. These instructions are meant to be used as a guide, and do not take into account specific job site situations. Consult local building codes and regulations along with the building owner or owner's representative before proceeding. If you have any questions regarding the above mentioned installation instructions, Stego products, please call us at 877-464-7834 for technical assistance. While Stego employees and representatives may provide technical assistance regarding the utility of a specific installation practice or Stego product, they are not authorized to make final design decisions.

949-257-4100 • 877-464-7834 • www.stegoindustries.com

Stego® Crete Claw® Tape

STEGO INDUSTRIES, LLC

Vapor Retarders
07 26 00, 03 30 00

1. Product Name

Stego® Crete Claw® Tape

2. Manufacturer

Stego Industries, LLC
216 Avenida Fabricante, Suite 101
San Clemente, CA 92672
Sales, Technical Assistance
Ph: (877) 464-7834
Fx: (949) 257-4113
www.stegoindustries.com

3. Product Description

USES: Stego Crete Claw Tape is a multi-layered tape that is used to seal Stego Wrap to concrete while the concrete is still wet. Crete Claw allows wet concrete to cast into the textured top surface to form a mechanical bond/seal.
COMPOSITION: Stego Crete Claw is composed of polyethylene film, aperture film, and an acrylic, pressure sensitive adhesive.
SIZE: Stego Crete Claw is 6" wide by 180' long. Stego Crete Claw ships 8 rolls in a case.

4. Technical Data

TABLE 1: PHYSICAL PROPERTIES OF STEGO CRETE CLAW

PROPERTY	RESULTS
Dimensions	6" x 180'
Total Thickness	26 mils
Permeance: ASTM F1249	0.03 perms
180° Adhesion Peel Strength: ASTM D903	17.6 lbf/in.
Sheer Adhesion Strength: 1 in^2 shear test using an Instron 3345 Machine	>49 lbf/in^2*

* Specimens failed by stretching vapor barrier to failure before pulling Crete Claw from concrete.

5. Installation

SECURING STEGO WRAP TO SLAB: Clean the surface of Stego Wrap to ensure that it is free of moisture, frost, dirt, and debris prior to the installation of Stego Crete Claw. When ready to apply Crete Claw, peel back the release liner and apply to Stego Wrap. Stego Crete Claw should be completely on Stego Wrap.

Install Crete Claw Tape on all seams and around the entire perimeter of the Stego Wrap installation.

To detail, cut Stego Crete Claw with a box knife or scissors. Crete Claw should be installed above 40°F for maximum adhesion. For additional information, please refer to Stego's complete installation instructions.

TIP: Wrap the release liner back over the entire roll while unrolling Crete Claw. This technique will allow the release liner to pull off easily and keep it out of the way.

6. Availability & Cost

Stego Crete Claw is available nationally through our network of building supply distributors. For current cost information, contact your local Stego Wrap distributor or Stego Industries' Sales Representative.

7. Warranty

Stego Industries, LLC believes to the best of its knowledge, that specifications and recommendations herein are accurate and reliable. However, since site conditions are not within its control, Stego Industries does not guarantee results from the use of the information provided and disclaims all liability from any loss or damage. NO WARRANTY, EXPRESS, IMPLIED OR STATUTORY, IS GIVEN AS TO THE MERCHANTABILITY, FITNESS FOR A PARTICULAR PURPOSE, OR OTHERWISE WITH RESPECT TO THE PRODUCTS REFERRED TO. Please see www.stegoindustries.com/legal.

8. Maintenance

Store Stego Crete Claw in a dry and temperate area.

9. Technical Services

Technical advice, custom CAD drawings, and additional information can be obtained by contacting Stego Industries' technical department or via our website.

10. Filing Systems

www.stegoindustries.com
Buildsite

Stego, the stegosaurus design logo[s], Crete Claw, StegoTack, StegoCrawl, Beast, and the Beast design logo are all deemed to be registered and/or protectable trademarks or service marks of Stego Industries, LLC. © 2016 Stego Industries, LLC. All Rights Reserved. Please see www.stegoindustries.com/legal. 5/2016

Stego® Crete Claw® (3" Wide)

STEGO INDUSTRIES, LLC

Vapor Retarders
07 26 00, 03 30 00

1. Product Name

Stego® Crete Claw® (3" Wide)

2. Manufacturer

Stego Industries, LLC
216 Avenida Fabricante, Suite 101
San Clemente, CA 92672
Sales, Technical Assistance
Ph: (877) 464-7834
Fx: (949) 257-4113
www.stegoindustries.com

3. Product Description

USES: Stego Crete Claw is a multi-layered tape that is used to seal Stego Wrap to the perimeter of the slab while the concrete is placed. Crete Claw allows wet concrete to cast into the textured top surface to form a mechanical bond/seal.
COMPOSITION: Stego Crete Claw is composed of polyethylene film, aperture film, and an acrylic, pressure sensitive adhesive.
SIZE: Stego Crete Claw (3" Wide) is 3" wide and 180' long. Stego Crete Claw (3" Wide) ships 16 rolls in a case.

4. Technical Data

TABLE 1: PHYSICAL PROPERTIES OF STEGO CRETE CLAW (3" Wide)

PROPERTY	RESULTS
Dimensions	3" x 180'
Total Thickness	26 mils
Permeance: ASTM F1249	0.03 perms
180° Adhesion Peel Strength: ASTM D903	17.6 lbf/in.
Sheer Adhesion Strength: 1 in^2 shear test using an Instron 3345 Machine	>49 lbf/in^2*

* Specimens failed by stretching vapor barrier to failure before pulling Crete Claw from concrete.

5. Installation

UNDER SLAB: Clean surface of Stego Wrap to ensure that it is free of moisture, frost, dirt, and debris prior to the installation of Stego Crete Claw. When ready to apply Crete Claw, peel back the release liner and apply to Stego Wrap. Stego Crete Claw should be completely on Stego Wrap.

To detail, cut Stego Crete Claw with a box knife or scissors. Crete Claw should be installed above 40°F for maximum adhesion. For additional information please refer to Stego's complete installation instructions.

TIP: Wrap the release liner back over the entire roll while unrolling Crete Claw. This technique will allow the release liner to pull off easily and keep it out of the way.

6. Availability & Cost

Stego Crete Claw (3" Wide) is available nationally through our network of building supply distributors. For current cost information, contact your local Stego Wrap distributor or Stego Industries' Sales Representative.

7. Warranty

Stego Industries, LLC believes to the best of its knowledge, that specifications and recommendations herein are accurate and reliable. However, since site conditions are not within its control, Stego Industries does not guarantee results from the use of the information provided and disclaims all liability from any loss or damage. NO WARRANTY, EXPRESS, IMPLIED OR STATUTORY, IS GIVEN AS TO THE MERCHANTABILITY, FITNESS FOR A PARTICULAR PURPOSE, OR OTHERWISE WITH RESPECT TO THE PRODUCTS REFERRED TO. Please see www.stegoindustries.com/legal.

8. Maintenance

Store Stego Crete Claw in a dry and temperate area.

9. Technical Services

Technical advice, custom CAD drawings, and additional information can be obtained by contacting Stego Industries' technical department or via our website.

10. Filing Systems

www.stegoindustries.com
Buildsite

Stego, the stegosaurus design logo[s], Crete Claw, StegoTack, StegoCrawl, Beast, and the Beast design logo are all deemed to be registered and/or protectable trademarks or service marks of Stego Industries, LLC. © 2016 Stego Industries, LLC. All Rights Reserved. Please see www.stegoindustries.com/legal. 5/2016

StegoTack® Tape

STEGO INDUSTRIES, LLC

Vapor Retarders
07 26 00, 03 30 00

1. Product Name
StegoTack® Tape

2. Manufacturer
Stego Industries, LLC
216 Avenida Fabricante, Suite 101
San Clemente, CA 92672
Sales, Technical Assistance
Ph: (877) 464-7834
Fx: (949) 257-4113
www.stegoindustries.com

3. Product Description
USES: StegoTack Tape is a double-sided adhesive strip used to bond and seal Stego Wrap to concrete, masonry, wood, metal, and other surfaces. StegoTack is a flexible and moldable material to allow for a variety of applications and installations.
COMPOSITION: StegoTack Tape is made from a blend of synthetic rubber and resins. SIZE: StegoTack Tape is 2 inches wide and 50 feet long. StegoTack Tape ships 12 rolls in a case.

4. Technical Data

TABLE 1: PHYSICAL PROPERTIES OF STEGOTACK TAPE

PROPERTY	RESULTS
Dimensions	50 feet long, 2 inches wide
Total Thickness	30 Mils
Permeance	0.03 perms (30 mils)
Color	Grey
Material	Synthetic rubber blend
Adhesion to Steel	12.5 lbs./in. width ASTM D1000
Installation Temperature	40°F/110°F (4°C/43°C)
In Service Temperature Range	-20°F/+140°F (-29°C/60°C)
VOC Content	No VOC's, 100% solids

5. Installation
TO WALLS: Make sure the area of adhesion is free of dust, dirt, debris, moisture, and frost to allow maximum adhesion. Remove release liner on one side and stick to desired surface. When ready to apply Stego Wrap, remove the exposed release liner and press Stego Wrap firmly against StegoTack Tape to secure.

Cut StegoTack Tape using a utility knife or scissors. Cut StegoTack Tape before removing the release liner for easier cutting. Install StegoTack Tape between 40°F and 110°F. For additional information please refer to Stego's complete installation instructions.

6. Availability & Cost
StegoTack Tape is available nationally through our network of building supply distributors. For current cost information, contact your local Stego Wrap distributor or Stego Industries' Sales Representative.

7. Warranty
Stego Industries, LLC believes to the best of its knowledge, that specifications and recommendations herein are accurate and reliable. However, since site conditions are not within its control, Stego Industries does not guarantee results from the use of the information provided and disclaims all liability from any loss or damage. NO WARRANTY, EXPRESS, IMPLIED OR STATUTORY, IS GIVEN AS TO THE MERCHANTABILITY, FITNESS FOR A PARTICULAR PURPOSE, OR OTHERWISE WITH RESPECT TO THE PRODUCTS REFERRED TO. Please see www.stegoindustries.com/legal.

8. Maintenance
For longer adhesive life, store in dry, temperate area.

9. Technical Services
Technical advice, custom CAD drawings, and additional information can be obtained by contacting Stego Industries' technical assistance department or via the website.

10. Filing Systems
www.stegoindustries.com
Buildsite

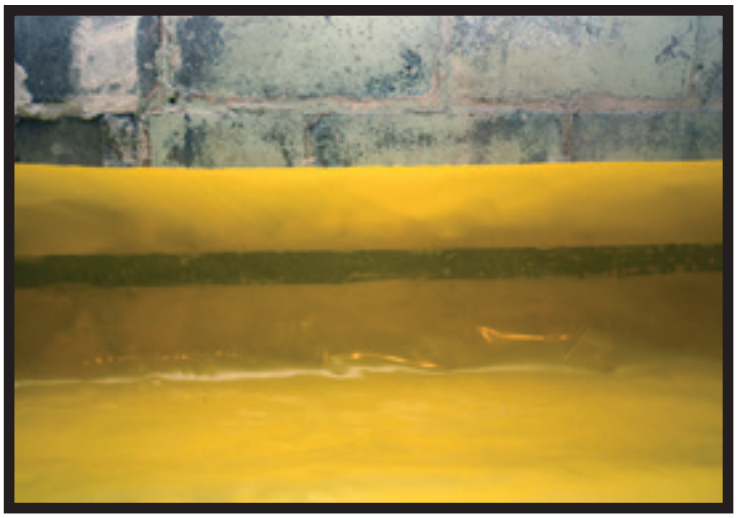

Stego, the stegosaurus design logo[s], Crete Claw, StegoTack, StegoCrawl, Beast, and the Beast design logo are all deemed to be registered and/or protectable trademarks or service marks of Stego Industries, LLC. © 2016 Stego Industries, LLC. All Rights Reserved. Please see www.stegoindustries.com/legal. 5/2016

Stego® Term Bar

STEGO INDUSTRIES, LLC

Vapor Retarders
07 26 00, 03 30 00

1. Product Name
Stego Term Bar

2. Manufacturer
Stego Industries, LLC
216 Avenida Fabricante, Suite 101
San Clemente, CA 92672
Sales, Technical Assistance
Ph: (877) 464-7834
Fx: (949) 257-4113
www.stegoindustries.com

3. Product Description
USES: Stego Term Bar is a semi-flexible plastic termination bar used for mechanically securing Stego Wrap or other materials to concrete, masonry, or wood.
COMPOSITION: Stego Term Bar is made from post-industrial recycled PVC.

5. Installation
UNDER SLAB: Nail through Stego Term Bar and Stego Wrap to secure material as needed. If the beveled edge is facing the wall, a pocket/lip is created for mastic/sealant to be used if required. Pre-drilled nail holes are provided every 6 inches for ease of installation.

To cut Stego Term Bar, score with a utility knife or wire snips. Stego Term Bar can be bent back and forth and then broken at desired locations as well. Stego Term Bar is flexible enough to bend around corners and contours in the wall for easy installation.

For additional information, please refer to Stego's complete installation instructions.

6. Availability & Cost
Stego Term Bar is available nationally through our network of building supply distributors. For current cost information, contact your local Stego Wrap distributor or Stego Industries' Sales Representative.

7. Warranty
Stego Industries, LLC believes to the best of its knowledge, that specifications and recommendations herein are accurate and reliable. However, since site conditions are not within its control, Stego Industries does not guarantee results from the use of the information provided and disclaims all liability from any loss or damage. NO WARRANTY, EXPRESS, IMPLIED OR STATUTORY, IS GIVEN AS TO THE MERCHANTABILITY, FITNESS FOR A PARTICULAR PURPOSE, OR OTHERWISE WITH RESPECT TO THE PRODUCTS REFERRED TO. Please see www.stegoindustries.com/legal.

8. Maintenance
Store above 60°F. Term Bar will become less flexible at lower temperatures.

9. Technical Services
Technical advice, custom CAD drawings, and additional information can be obtained by contacting Stego Industries' technical assistance department or via the website.

10. Filing Systems
www.stegoindustries.com

4. Technical Data

TABLE 1: PHYSICAL PROPERTIES OF STEGO TERM BAR

PROPERTY	RESULTS
Dimensions	4 feet long, 1 1/8 inches wide
Color	Red
Material	Recycled PVC
Weight	4.7 oz. (132 grams)

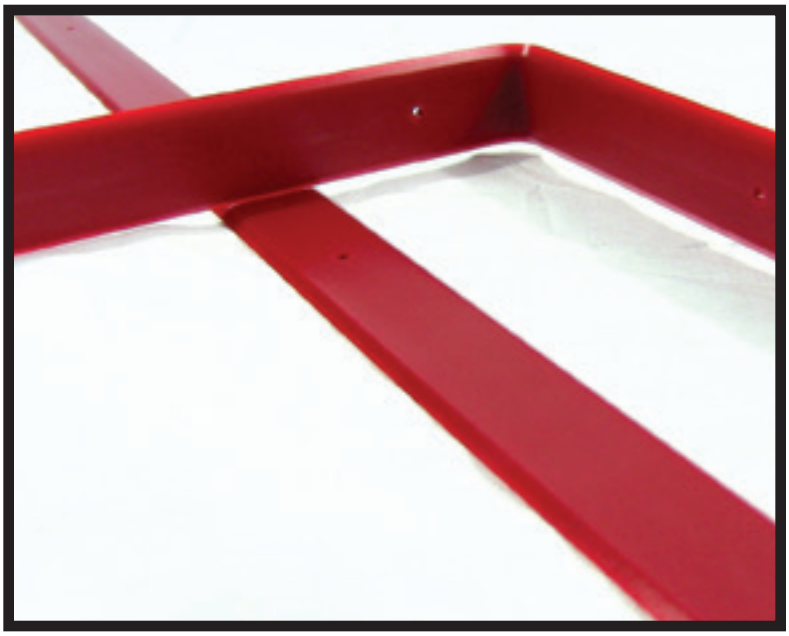

Stego, the stegosaurus design logo[s], Crete Claw, StegoTack, StegoCrawl, Beast, and the Beast design logo are all deemed to be registered and/or protectable trademarks or service marks of Stego Industries, LLC. © 2016 Stego Industries, LLC. All Rights Reserved. Please see www.stegoindustries.com/legal. 5/2016

Stego® Pre-Cut Pipe Boots

STEGO INDUSTRIES, LLC

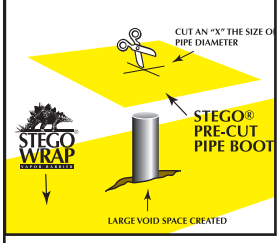

Vapor Retarders
07 26 00, 03 30 00

1. Product Name
Stego Pre-Cut Pipe Boots

2. Manufacturer
Stego Industries, LLC
216 Avenida Fabricante, Suite 101
San Clemente, CA 92672
Sales, Technical Assistance
Ph: (877) 464-7834
Fx: (949) 257-4113
www.stegoindustries.com

3. Product Description
USES: Stego Pre-Cut Pipe Boots are used to seal around permanent penetrations in Stego Wrap.
COMPOSITION: Stego Pre-Cut Pipe Boots are made from Stego Wrap Vapor Barrier (15-mil), and therefore are manufactured from only high grade prime, virgin, polyolefin resins.
SIZE: Stego Pre-Cut Pipe Boots are 18" by 18" and 15 mils thick. Stego Pre-Cut Pipe Boots ship 10 packs of 25 in a case (250 boots per case).

5. Installation
UNDER SLAB: Cut an "X" the size of the pipe diameter in the center of the Pre-Cut Pipe Boot and slide tightly over pipe. Tape all sides of the pipe boot with Stego Tape. Seal around the base of the pipe using Stego tape and/or Stego Mastic.

For additional information, please refer to Stego's complete installation instructions.

6. Availability & Cost
Stego Pre-Cut Pipe Boots are available nationally through our network of building supply distributors. For current cost information, contact your local Stego Wrap distributor or Stego Industries' Sales Representative.

7. Warranty
Stego Industries, LLC believes to the best of its knowledge, that specifications and recommendations herein are accurate and reliable. However, since site conditions are not within its control, Stego Industries does not guarantee results from the use of the information provided and disclaims all liability from any loss or damage. NO WARRANTY, EXPRESS, IMPLIED OR STATUTORY, IS GIVEN AS TO THE MERCHANTABILITY, FITNESS FOR A PARTICULAR PURPOSE, OR OTHERWISE WITH RESPECT TO THE PRODUCTS REFERRED TO. Please see www.stegoindustries.com/legal.

8. Maintenance
None required.

9. Technical Services
Technical advice, custom CAD drawings, and additional information can be obtained by contacting Stego Industries' technical assistance department or via the website.

10. Filing Systems
- www.stegoindustries.com

4. Technical Data

TABLE 1: PHYSICAL PROPERTIES OF STEGO PRE-CUT PIPE BOOTS

PROPERTY	TEST	RESULTS
Under Slab Vapor Retarders	ASTM E1745 Class A, B & C – Standard Specification for Water Vapor Retarders Used in Contact with Soil or Granular Fill under Concrete Slabs	Exceeds Class A, B & C
Water Vapor Permeance	ASTM F1249 – Test Method for Water Vapor Transmission Rate Through Plastic Film and Sheeting Using a Modulated Infrared Sensor	0.0086 perms *0.0036 WVTR
Puncture Resistance	ASTM D1709 – Test Methods for Impact Resistance of Plastic Film by Free-Falling Dart Method	2266 grams
Tensile Strength	ASTM D882 – Test Method for Tensile Properties of Thin Plastic Sheeting	70.60 lbf/in.
Permeance After Conditioning (ASTM E1745 Sections 7.1.2 - 7.1.5)	ASTM E154 Section 8, F1249 – Permeance after wetting, drying, and soaking ASTM E154 Section 11, F1249 – Permeance after heat conditioning ASTM E154 Section 12, F1249 – Permeance after low temperature conditioning ASTM E154 Section 13, F1249 – Permeance after soil organism exposure	0.0098 perms 0.0091 perms 0.0097 perms 0.0095 perms
Thickness		15 mils
Pipe Boot Dimensions		18" x 18"

Note: perm unit = grains/(ft^2 *hr* in.Hg) * WVTR = Water Vapor Transmission Rate

Stego, the stegosaurus design logo[s], Crete Claw, StegoTack, StegoCrawl, Beast, and the Beast design logo are all deemed to be registered and/or protectable trademarks or service marks of Stego Industries, LLC. © 2016 Stego Industries, LLC. All Rights Reserved. Please see www.stegoindustries.com/legal. 5/2016

PART 1

STEGO® WRAP VAPOR BARRIER/RETARDER INSTALLATION INSTRUCTIONS

IMPORTANT: Please read these installation instructions completely, prior to beginning any Stego Wrap installation. The following installation instructions are based on ASTM E1643 - Standard Practice for Selection, Design, Installation, and Inspection of Water Vapor Retarders Used in Contact with Earth or Granular Fill Under Concrete Slabs. If project specifications call for compliance with ASTM E1643, then be sure to review the specific installation sections outlined in the standard along with the techniques referenced in these instructions.

FIGURE 1: UNDER-SLAB INSTALLATION

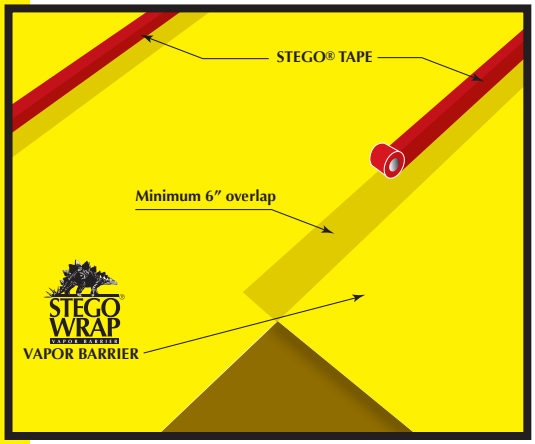

FIGURE 2a: SEAL TO SLAB AT PERIMETER

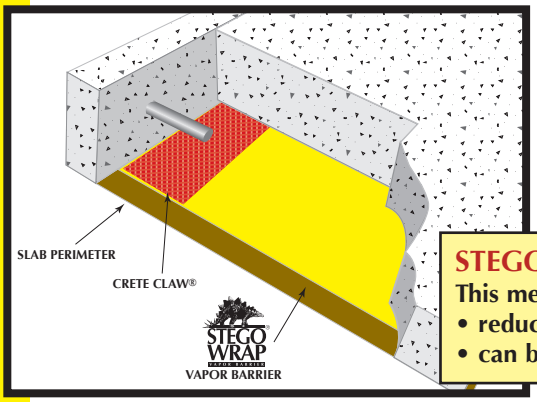

FIGURE 2b: SEAL TO PERIMETER WALL

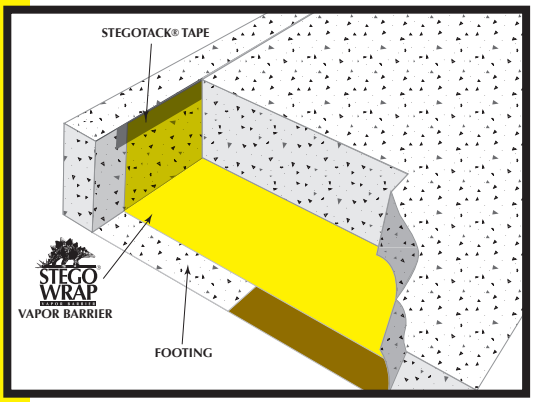

UNDER-SLAB INSTRUCTIONS:

1. Stego Wrap can be installed over an aggregate, sand, or tamped earth base. It is not necessary to have a cushion layer or sand base, as Stego Wrap is tough enough to withstand rugged construction environments.
2. Unroll Stego Wrap over the area where the slab is to be placed. Stego Wrap should completely cover the concrete placement area. All joints/seams both lateral and butt should be overlapped a minimum of six inches and taped using Stego Tape.

NOTE: The area of adhesion should be free from dust, dirt, moisture, and frost to allow maximum adhesion of the pressure-sensitive tape.

3. ASTM E1643 requires sealing the perimeter of the slab. *Extend vapor retarder over footings and seal to foundation wall, grade beam, or slab at an elevation consistent with the top of the slab or terminate at impediments such as waterstops or dowels.* Consult the structural engineer of record before proceeding.

SEAL TO SLAB AT PERIMETER:*

NOTE: Clean the surface of Stego Wrap to ensure that the area of adhesion is free from dust, dirt, moisture, and frost to allow maximum adhesion of the pressure-sensitive adhesive.

a. Install Crete Claw® on the entire perimeter edge of Stego Wrap.
b. Prior to the placement of concrete, ensure that the top of Crete Claw is free of dirt, debris, or mud to maximize the bond to the concrete.

STEGO LABOR SAVER!

This method not only complies with ASTM E1643, but it also:
- **reduces labor compared to other perimeter sealing techniques.**
- **can be used even without an existing wall or footing, unlike alternatives.**

OR SEAL TO PERIMETER WALL WITH STEGOTACK® TAPE:*

a. Make sure area of adhesion is free of dust, dirt, debris, moisture, and frost to allow maximum adhesion.
b. Remove release liner on one side and stick to desired surface.
c. When ready to apply Stego Wrap, remove the exposed release liner and press Stego Wrap firmly against StegoTack Tape to secure.

* If ASTM E1643 is specified, consult with project architect and structural engineer to determine which perimeter seal technique should be employed for the project.

NOTE: Stego Industries, LLC's ("Stego") installation instructions are based on ASTM E1643 - *Standard Practice for Selection, Design, Installation, and Inspection of Water Vapor Retarders Used in Contact with Earth or Granular Fill Under Concrete Slabs.* These instructions are meant to be used as a guide, and do not take into account specific job site situations. Consult local building codes and regulations along with the building owner or owner's representative before proceeding. If you have any questions regarding the above mentioned installation instructions or Stego products, please call us at 877-464-7834 for technical assistance. While Stego employees and representatives may provide technical assistance regarding the utility of a specific installation practice or Stego product, they are not authorized to make final design decisions.

Stego, the stegosaurus design logo[s], Crete Claw, StegoTack, StegoCrawl, Beast, and the Beast design logo are all deemed to be registered and/or protectable trademarks or service marks of Stego Industries, LLC. © 2016 Stego Industries, LLC. All Rights Reserved. Please see www.stegoindustries.com/legal. 5/2016

949-257-4100 • 877-464-7834 • www.stegoindustries.com

4. In the event that Stego Wrap is damaged during or after installation, repairs must be made. For holes, cut a piece of Stego Wrap to a size and shape that covers any damage by a minimum overlap of six inches in all directions. Clean all adhesion areas of dust, dirt, moisture, and frost. Tape down all edges using Stego Tape (see figure 3, Sealing Damaged Areas).

FIGURE 3: SEALING DAMAGED AREAS

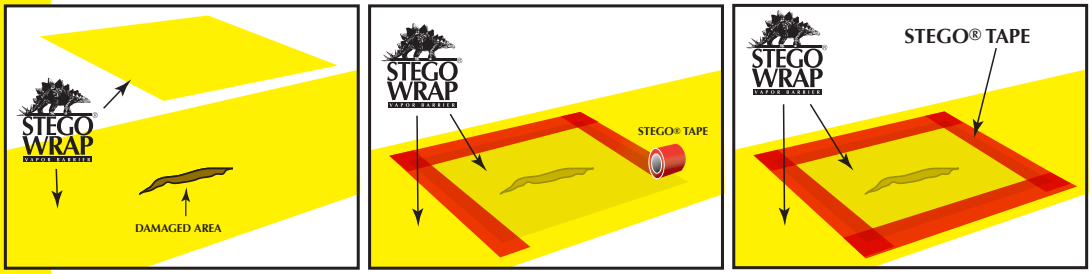

BEAST™

NOTE: Stego Industries recommends the use of vapor barrier-safe concrete accessories, like Beast™ Screed, to help minimize the amount of penetrations in a Stego Wrap Installation.

5. **IMPORTANT: ALL PENETRATIONS MUST BE SEALED.** All pipe, ducting, rebar, wire penetrations and block outs should be sealed using Stego Wrap, Stego Tape and/or Stego Mastic (see figure 4a, Pipe Penetration Sealing).

FIGURE 4a: PIPE PENETRATION SEALING

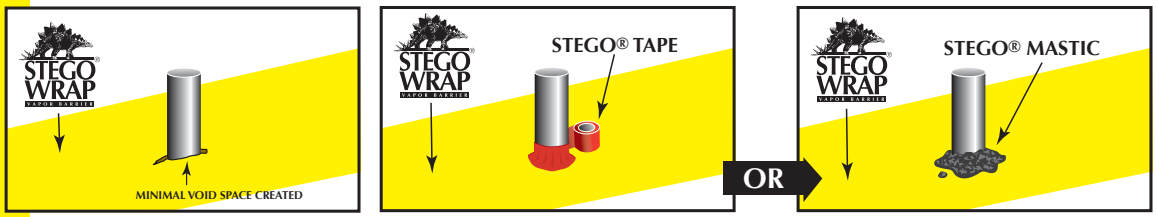

STEGO WRAP PIPE PENETRATION REPAIR DETAIL:

1: Install Stego Wrap around pipe penetrations by slitting/cutting material as needed. Try to minimize the void space created.

2: If Stego Wrap is close to pipe and void space is minimized then seal around pipe penetration with Stego Tape and/or Stego Mastic.

(See Figure 4a)

3: If detail patch is needed to minimize void space around penetration, then cut a detail patch to a size and shape that creates a six inch overlap on all edges around the void space at the base of the pipe. Stego Pre-Cut Pipe Boots are also available to speed up the installation.

4: Cut an "X" the size of the pipe diameter in the center of the pipe boot and slide tightly over pipe.

5: Tape down all sides of the pipe boot with Stego Tape.

6: Seal around the base of the pipe using Stego Tape and/or Stego Mastic.

(See Figure 4b)

FIGURE 4b: DETAIL PATCH FOR PIPE PENETRATION SEALING

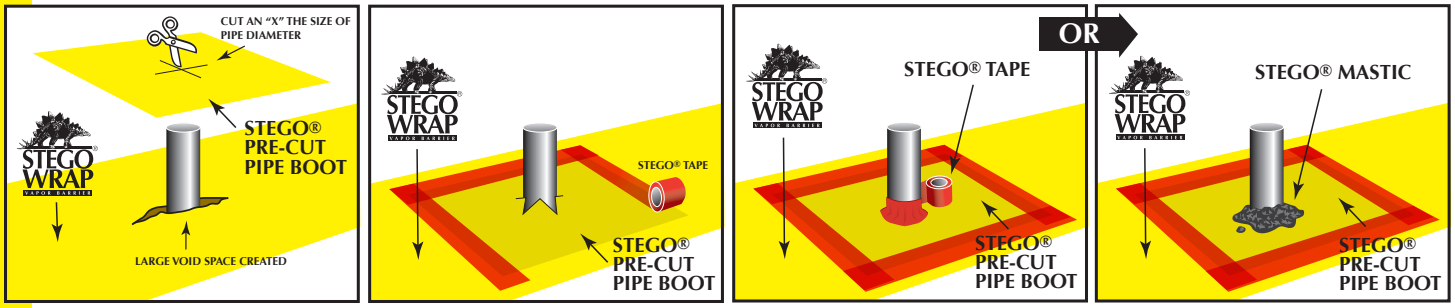

FIGURE 5: MULTIPLE PIPE PENETRATION SEALING

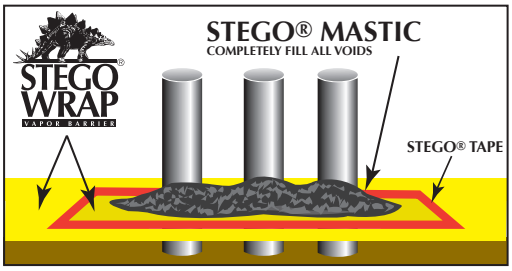

MULTIPLE PIPE PENETRATION SEALING:

Multiple pipe penetrations in close proximity and very small pipes may be sealed using Stego Wrap and Stego Mastic for ease of installation (see figure 5, Multiple Pipe Penetration Sealing).

NOTE: Stego Industries, LLC's ("Stego") installation instructions are based on ASTM E1643 - *Standard Practice for Selection, Design, Installation, and Inspection of Water Vapor Retarders Used in Contact with Earth or Granular Fill Under Concrete Slabs.* These instructions are meant to be used as a guide, and do not take into account specific job site situations. Consult local building codes and regulations along with the building owner or owner's representative before proceeding. If you have any questions regarding the above mentioned installation instructions or Stego products, please call us at 877-464-7834 for technical assistance. While Stego employees and representatives may provide technical assistance regarding the utility of a specific installation practice or Stego product, they are not authorized to make final design decisions.

Stego, the stegosaurus design logo[s], Crete Claw, StegoTack, StegoCrawl, Beast, and the Beast design logo are all deemed to be registered and/or protectable trademarks or service marks of Stego Industries, LLC. © 2016 Stego Industries, LLC. All Rights Reserved. Please see www.stegoindustries.com/legal. 5/2016

949-257-4100 • 877-464-7834 • www.stegoindustries.com

PART 2

STEGOCRAWL® WRAP VAPOR BARRIER/RETARDER INSTALLATION INSTRUCTIONS

CRAWL SPACE INSTALLATION INSTRUCTIONS:

1. Turn StegoCrawl® Wrap up the foundation wall to a minimum height of six inches above the outside/exterior grade or in compliance with local building codes and terminate with Stego Term Bar. To form a complete seal, apply StegoTack Tape or a layer of Stego Mastic to the foundation wall prior to installing Stego Term Bar. Allow one hour for Stego Mastic to cure prior to installing Stego Term Bar.
2. Seal StegoCrawl® Wrap around all penetrations and columns using StegoCrawl® Tape, StegoTack Tape, and/or Stego Mastic.
3. Place StegoCrawl® Wrap directly over the crawl space floor. If rigid insulation is to be used, install StegoCrawl® Wrap prior to insulation (under insulation and between the foundation wall and insulation).
4. Overlap seams a minimum of six inches and seal with StegoCrawl® Tape. Some codes require a minimum of a twelve inch overlap. Check appropriate codes prior to installation.

FIGURE 6: CRAWL SPACE INSTALLATION

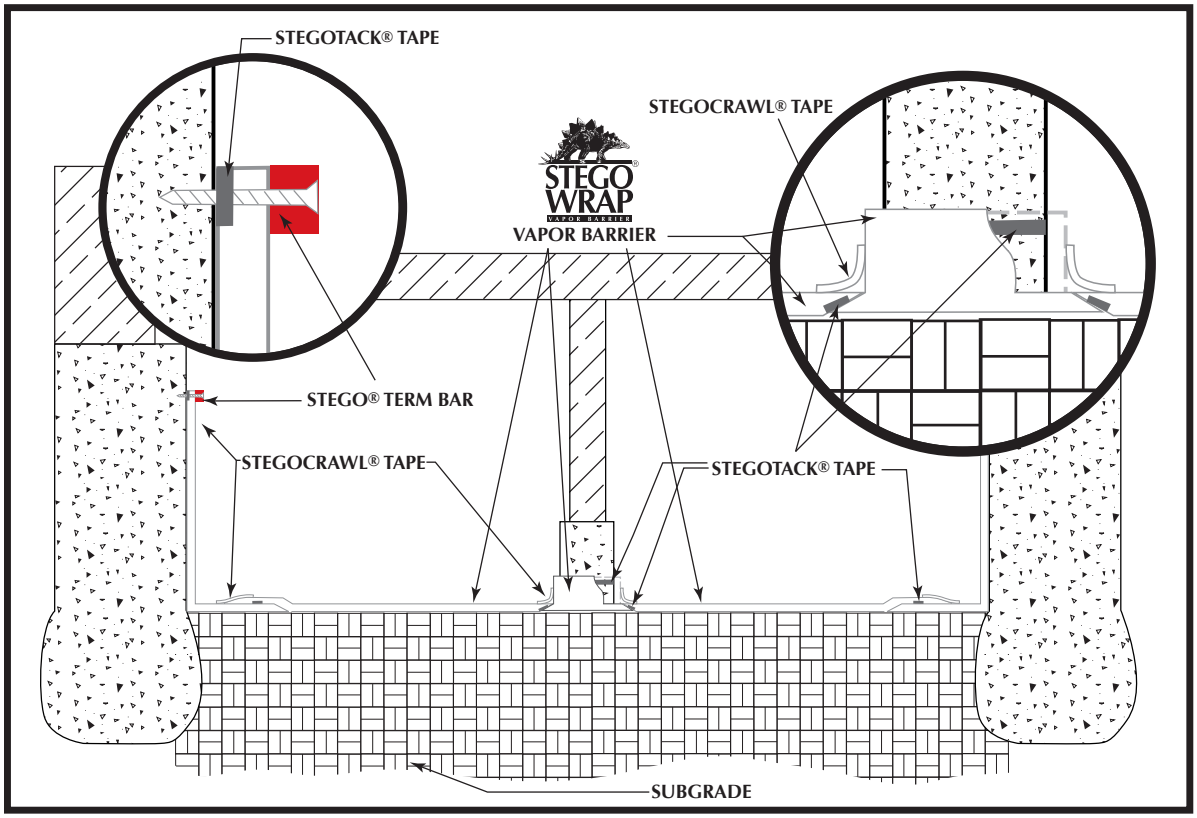

INSTALLATION TIP:

1. For a cleaner look and to prevent against tenting of StegoCrawl® Wrap at the foundation wall/foundation floor intersection, consider mechanically fastening StegoCrawl® Wrap to base of foundation wall in addition to the above mentioned wall termination.
2. Some contractors have found it more efficient to detail/seal the pipes, columns, utilities, and seal the vapor barrier at the slab perimeter prior to installing the remaining vapor barrier.

NOTE: Stego Industries, LLC's ("Stego") installation instructions are based on ASTM E1643 - *Standard Practice for Selection, Design, Installation, and Inspection of Water Vapor Retarders Used in Contact with Earth or Granular Fill Under Concrete Slabs.* These instructions are meant to be used as a guide, and do not take into account specific job site situations. Consult local building codes and regulations along with the building owner or owner's representative before proceeding. If you have any questions regarding the above mentioned installation instructions or Stego products, please call us at 877-464-7834 for technical assistance. While Stego employees and representatives may provide technical assistance regarding the utility of a specific installation practice or Stego product, they are not authorized to make final design decisions.

Stego, the stegosaurus design logo[s], Crete Claw, StegoTack, StegoCrawl, Beast, and the Beast design logo are all deemed to be registered and/or protectable trademarks or service marks of Stego Industries, LLC. © 2016 Stego Industries, LLC. All Rights Reserved. Please see www.stegoindustries.com/legal. 5/2016

949-257-4100 • 877-464-7834 • www.stegoindustries.com